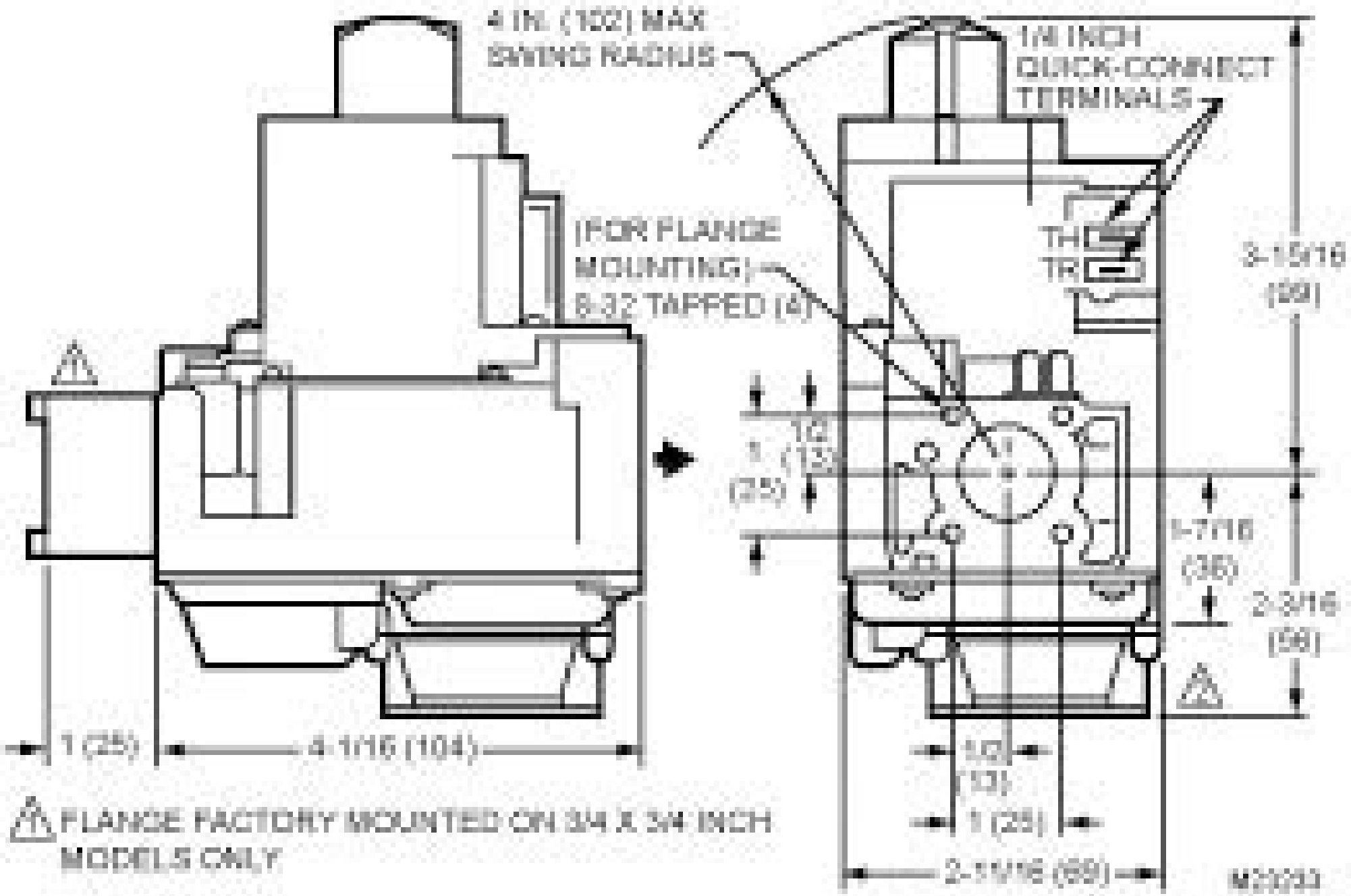


⚠ FLANGE FACTORY MOUNTED ON 3/4 X 3/4 INCH MODELS ONLY.

⚠ STEP-OPEN MODELS ONLY.