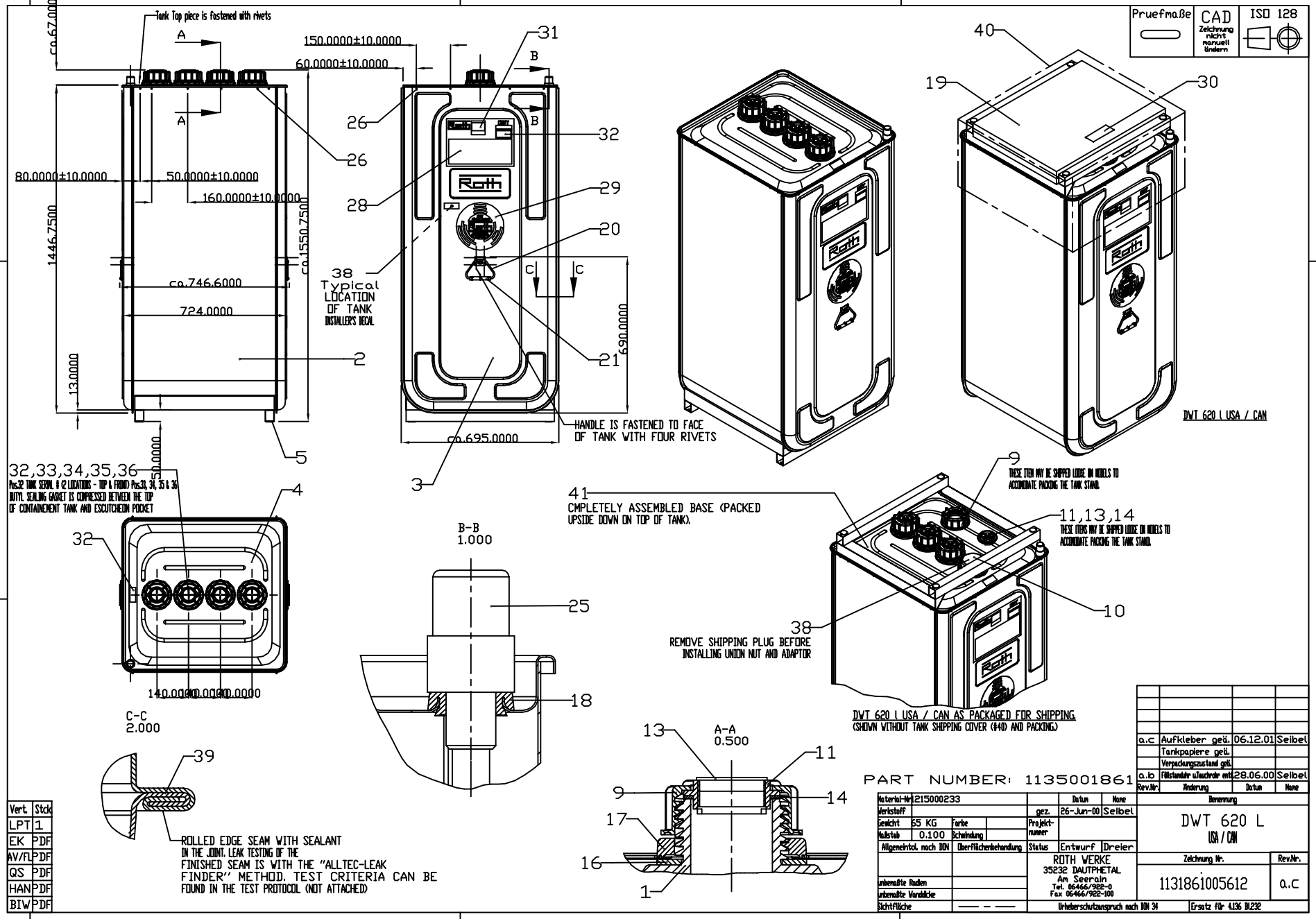
Pruefmaße
CAD Zeichnung nicht manuell ändern
ISO 128
Tank Top piece is fastened with rivets
ca.67.0000
150.0000±10.0000
60.0000±10.0000
80.0000±10.0000
50.0000±10.0000
160.0000±10.0000
1446.7500
ca.1550.7500
ca.746.6000
724.0000
13.0000
50.0000
ca.695.0000
690.0000
38 Typical LOCATION OF TANK INSTALLER'S DECAL
HANDLE IS FASTENED TO FACE OF TANK WITH FOUR RIVETS
DWT 620 L USA / CAN
32,33,34,35,36
Pos.32 TANK SEAL, & C2 LOCATIONS - TOP & FRONT Pos.33, 34, 35 & 36 BUTYL SEALING GASKET IS COMPRESSED BETWEEN THE TOP OF CONTAINEMENT TANK AND ESCUTCHEON POCKET
41
CMPLETELY ASSEMBLED BASE (PACKED UPSIDE DOWN ON TOP OF TANK).
THESE ITEM MAY BE SHIPPED LOOSE ON NOBELS TO ACCOMODATE PACKING THE TANK STAND.
11,13,14
THESE ITEMS MAY BE SHIPPED LOOSE ON NOBELS TO ACCOMODATE PACKING THE TANK STAND.
38
REMOVE SHIPPING PLUG BEFORE INSTALLING UNION NUT AND ADAPTOR
DWT 620 L USA / CAN AS PACKAGED FOR SHIPPING
(SHOWN WITHOUT TANK SHIPPING COVER (#40) AND PACKING.)
B-B
1.000
C-C
2.000
A-A
0.500
ROLLED EDGE SEAM WITH SEALANT IN THE JOINT. LEAK TESTING OF THE FINISHED SEAM IS WITH THE "ALLTEC-LEAK FINDER" METHOD. TEST CRITERIA CAN BE FOUND IN THE TEST PROTOCOL (NOT ATTACHED)
PART NUMBER: 1135001861
a.c Aufkleber geä. 06.12.01 Seibel
Tankpapiere geä.
Verpackungszustand geä.
a.b Füllstandsanz.u.Tauchrohr ent. 28.06.00 Seibel
Rev.Nr. Änderung Datum Name
Benennung
DWT 620 L
USA / CAN
Zeichnung Nr. 1131861005612
Rev.Nr. a.c
Material-Nr. 1215000233
Werkstoff
Gewicht 65 KG
Maßstab 0.100
Farbe
Schmelzung
Datum Name
gez. 26-Jun-00 Seibel
Projekt-nummer
Status Entwurf Dreier
Allgemeintol. nach DIN
Oberflächenbehandlung
unbearbeitete Radien
unbearbeitete Vorsprünge
Sichtfläche
ROTH WERKE
35232 DAUTPHETAL
Am Seerain
Tel. 06466/922-0
Fax 06466/922-100
Urheberschutzanspruch nach DIN 34
Ersatz für 4136 BL232
Vert. Stck
LPT 1
EK PDF
AV/FL PDF
QS PDF
HAN PDF
BIW PDF