27	CHANGED N/P LABEL TO NEW LAYOUT	MLM 1/11/08	28	REMOVE BARCODE & UPDATE NAMEPLATE	KSA 11/06/09	29	REVISED PACKING AND ADDED CARTON LABEL NOTES	4003930 MLM /11	STANDARD TOLERANCES: ANGULAR +/- 1 DEGREE 2 PLACE DECIMAL +/- .01 3 PLACE DECIMAL +/- .005

If Printed, this is an Uncontrolled Document.

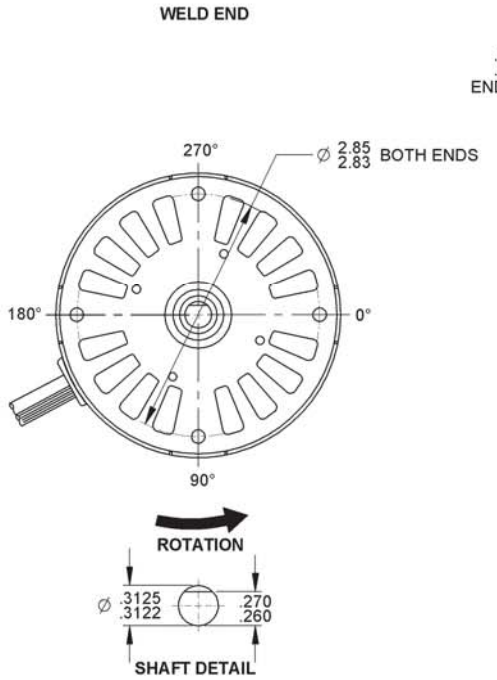

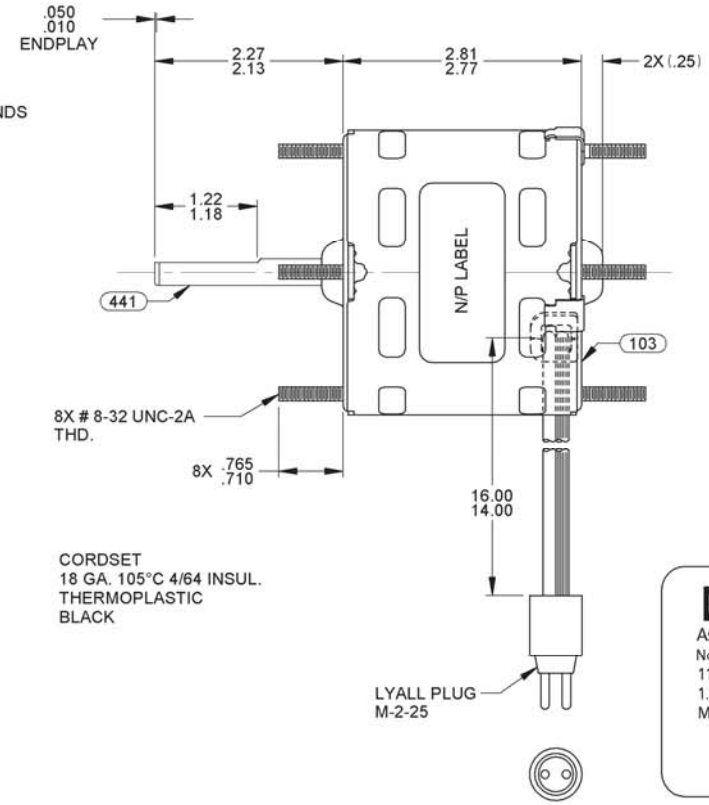

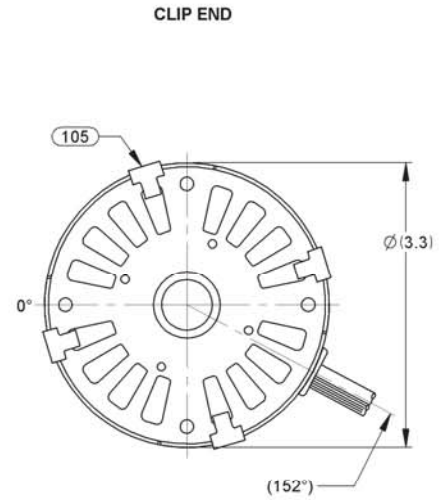

0046-4072

0046-4282

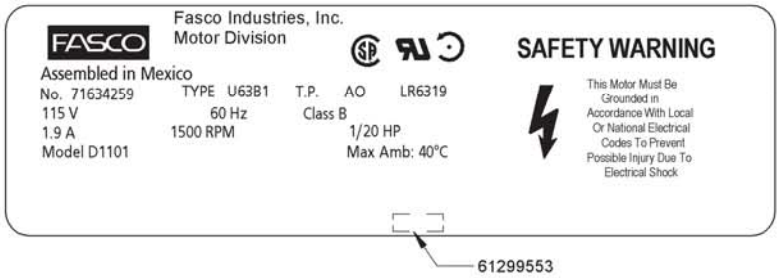

NOTES:

1. NO PACKAGING TAPE OVER CARTON LABEL.

FRONT SHAFT POSITION	TYPICAL PERFORMANCE AT 115 VOLTS 60 Hz.											
HORIZONTAL UP / DOWN	MOTOR SPEED	IDLE			LOADED				LOCKED			BREAK
		R.P.M.	AMP.	WATT	IN.OZ.	R.P.M.	AMP.	WATT	IN.OZ.	AMP.	WATT	IN.OZ.
		1769	1.54	87	33.4	1550	1.73	122	13.8	2.60	186	41.8
CUSTOMER APPROVAL:												
SIGNED:												
DATE:												

CUSTOMER:	FASCO DIST.
PART NUMBER:	D1101
APPLICATION:	COUNTER SALES
MOTOR WEIGHT:	3.13 LBS.
ENVIRONMENT:	DRY
FINISH COLOR:	BLACK
DRAWN BY:	S. DALTON
DATE DRAWN:	8-21-2001

FASCO MOTORS GROUP
AC MOTOR/BLOWER DIVISION

CONFIDENTIAL: DO NOT DUPLICATE OR DISCLOSE TO THIRD PARTIES WITHOUT WRITTEN PERMISSION OF FASCO MOTORS GROUP, AC MOTOR/BLOWER DIVISION.

MOTOR TYPE	DRAWING NUMBER
SHADED POLE	7163 4259

B	LA	FR	A	S	C	E	B	A	REV.
00	63	30	V	05	OH	5	3	0	29