Honeywell

HOT SURFACE IGNITION MODULES

THE S89 AND S890 PROVIDE OPERATING CONTROL AND SYSTEM SHUTDOWN ON LOSS OF MAIN BURNER FLAME IN DIRECT IGNITION CENTRAL HEAT FURNACES AND HEATING APPLIANCES WITH HOT SURFACE IGNITER.

☐ S89C,G,J and S890C,G,J are for systems with a combination igniter-sensor.

☐ S890D,H and S890D,H are for systems with separate igniter and sensor.

☐ S89C,D,J and S890C,D,J lock out after one try for ignition.

☐ S89G,H and S890G,H provide three tries for ignition before lockout, with 30 sec. min. purge before second and third tries.

☐ S89J and S890J provide 2 or 4 sec. (depending on model) max. ignition activation periods.

☐ S890 provides 30 sec. min. prepurge on initial trial for ignition.

☐ Compatible with Norton 201 and 271 or equivalent hot surface igniters.

☐ S89D,H and S890D,H require a separate sensor mounted on burner (Q354 recommended).

☐ Available with leadwires for line voltage connections.

☐ Available with Molex plug for connecting D80D Vent Damper.

☐ Modules can be used on either natural or LP gas; they provide 100 percent shutoff of gas on lockout.

☐ Modules have relay contacts for use with any direct ignition gas control with max. 2.0 A, 24 Vac rating.

☐ Modules use rectification principle for flame sensing.

☐ Minus 40° F to +175° F [minus 40° C to +79° C] temperature rating.

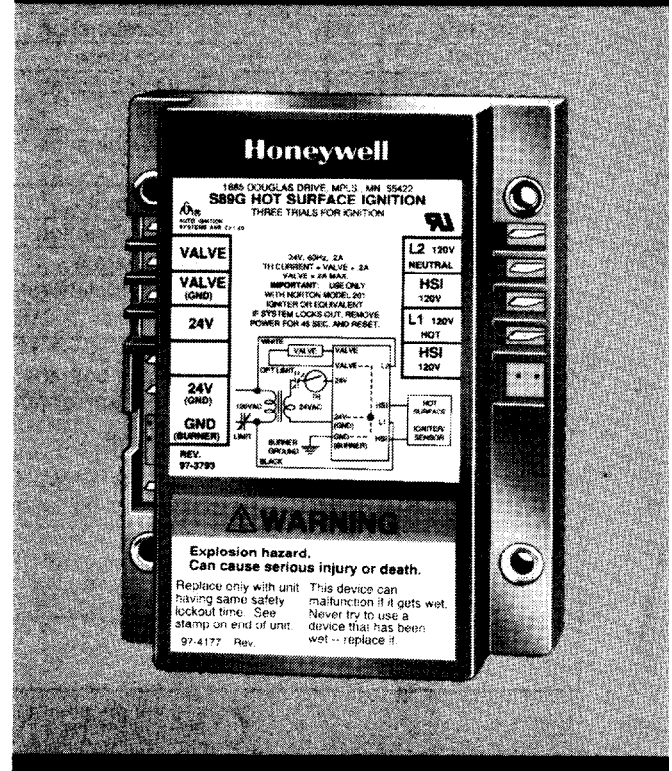

S89C, D, G, H, J
S890C, D, G, H, J

J.A.
Rev. 9-89

Form Number 68-0070—1
© Honeywell Inc. 1989

SPECIFICATIONS

IMPORTANT

THE SPECIFICATIONS GIVEN IN THIS PUBLICATION DO NOT INCLUDE NORMAL MANUFACTURING TOLERANCES. THEREFORE, THIS UNIT MAY NOT MATCH THE LISTED SPECIFICATIONS EXACTLY. ALSO, THIS PRODUCT IS TESTED AND CALIBRATED UNDER CLOSELY CONTROLLED CONDITIONS, AND SOME MINOR DIFFERENCES IN PERFORMANCE CAN BE EXPECTED IF THOSE CONDITIONS ARE CHANGED.

MODELS: See Table 1.

TABLE 1—HOT SURFACE IGNITION MODULES

MODEL	NO. IGNITION TRIALS	IGNITER/ SENSOR TYPE	LOCKOUT TIMING	IGNITION ACTIVATION PERIOD[a]	PREPURGE TIMING
S89C	1	Combination	4, 6,11 or 15 sec. nom., as ordered	Not special IAP model.	None
S89D	1	Separate			
S89G	3	Combination			
S89H	3	Separate			
S89J	1	Combination	4 sec. nom.	2 sec. max.	
			6 sec. nom.	4 sec. max.	
S890C	1	Combination	4, 6, 11 or 15 sec. nom., as ordered	Not special IAP model.	30 sec. min.
S890D	1	Separate			
S890G	3	Combination			
S890H	3	Separate			
S890J	1	Combination	4 sec. nom.	2 sec. max.	
			6 sec. nom.	4 sec. max.	

[a] Ignition activation period (IAP) is the time both the igniter and the gas control are powered following warmup. The gas control remains open 0.75 sec. min. after igniter turns off to allow flame sensing.

(continued on page 3)

ORDERING INFORMATION

WHEN PURCHASING REPLACEMENT AND MODERNIZATION PRODUCTS FROM YOUR TRADELINE WHOLESALER OR YOUR DISTRIBUTOR, REFER TO THE TRADELINE CATALOG OR PRICE SHEETS FOR COMPLETE ORDERING NUMBER, OR SPECIFY—

1. **Order number.**
2. **Lockout timing.**
3. **Leadwires, if desired.**
4. **Molex plug for vent damper connection, if required.**
5. **Other components as required.**

IF YOU HAVE ADDITIONAL QUESTIONS, NEED FURTHER INFORMATION OR WOULD LIKE TO COMMENT ON OUR PRODUCTS OR SERVICES, PLEASE WRITE OR PHONE:

1. **YOUR LOCAL HONEYWELL RESIDENTIAL SALES OFFICE (CHECK WHITE PAGES OF YOUR PHONE DIRECTORY).**
2. **RESIDENTIAL DIVISION CUSTOMER SERVICE HONEYWELL INC., 1885 DOUGLAS DRIVE NORTH MINNEAPOLIS, MINNESOTA 55422-4386 (612) 542-7500**

IN CANADA—HONEYWELL LIMITED/HONEYWELL LIMITEE, 740 ELLESMERE ROAD, SCARBOROUGH, ONTARIO M1P 2V9. INTERNATIONAL SALES AND SERVICE OFFICES IN ALL PRINCIPAL CITIES OF THE WORLD.

ELECTRICAL RATINGS:
Voltage and frequency: 20.5 to 28.5 V (24 V nom.), 60 Hz.
Current rating: 0.2 A.
Gas control contact ratings (at 24 Vac): 2.0 A running, 20.0 A inrush.
IGNITER WARM-UP PERIOD: 34 sec., nom.
THERMOSTAT ANTICIPATOR SETTING: 0.2 A plus gas control current rating.
AMBIENT TEMPERATURE RATING: Minus 40° F to +175° F [minus 40° C to +79° C].
RELATIVE HUMIDITY RATING: 5 to 90 percent at 95° F.
FLAME FAILURE RESPONSE TIME: 2 sec. max. with a 2.5 µA flame signal.
FLAME CURRENT: 0.8 µA DC, min.
TERMINALS: 1/4 in. male quick connects for line voltage and sensor connections; 3/16 in. male quick connects for all low voltage connections. Terminal options (specify when ordering):
- Molex plug for connection to D80D Vent Damper.
- 10 in. [250 mm] min. color-coded leadwires for all line voltage connections.

MOUNTING: Mounts in any position. Fasten with No. 6-32 machine or No. 8 sheetmetal screws, 1 in. long.
DIMENSIONS: See Fig. 1.
UNDERWRITERS LABORATORIES INC. COMPONENT RECOGNIZED: FILE NO. MP268, Guide No. MCCZ2.
CANADIAN GAS ASSOCIATION CERTIFIED: 1029-ABI-6218.
AMERICAN GAS ASSOCIATION CERTIFIED: 20-20B1.

OTHER SYSTEM CONTROLS

The S89 and S890 provide operating control of a direct ignition system using a hot surface igniter. Additional components required to complete the system must be ordered separately. They include:
DUAL VALVE COMBINATION GAS CONTROL: Any direct ignition gas control with 2.0 A max. main valve rating. VR8205, VR845, VR854, VR8450 or VR8540 recommended.
HOT SURFACE IGNITER OR IGNITER-SENSOR: Norton Model 201 or 271 or equivalent.

NOTE: If igniter other than Norton Model 201 or 271 is used, the igniter must meet the following minimum specifications, required over the life of the igniter:

- Igniter must reach 1000° C [1832° F] within 34 seconds with 102 Vac applied.
- Igniter must maintain at least 500M ohms insulation resistance between the igniter leadwires and the igniter mounting bracket.
- Igniter must not develop an insulating layer on its surface (over time) which would prevent flame sensing.
- Igniter surface area immersed in flame must not exceed 1/4 of the grounded area immersed in flame. This would prevent flame sensing.
- Igniter current draw at 132 Vac must not exceed 5 A.

SENSOR: Separate sensor required for all S89D,H and S890D,H. Honeywell Q354 recommended.
IGNITER WIRING: Provide wiring harness to suit application.
- Leadwires: No. 18 AWG, stranded copper with 105° C rated 1/16 in. PVC insulation.
- Terminals: Insulated 1/4 in. female quick connects or solderless connectors to module (depending on module) and suitable connector to igniter.

TRANSFORMER: Add current ratings of module, gas control, vent damper and any other components of the control system to determine transformer size requirement.
THERMOSTAT: Compatible with any Honeywell 24 V thermostat and with competitive 24 V thermostats that are powered independently of the module.
HIGH LIMIT AND OTHER AUXILIARY CONTROLS: As specified by the heating appliance manufacturer.

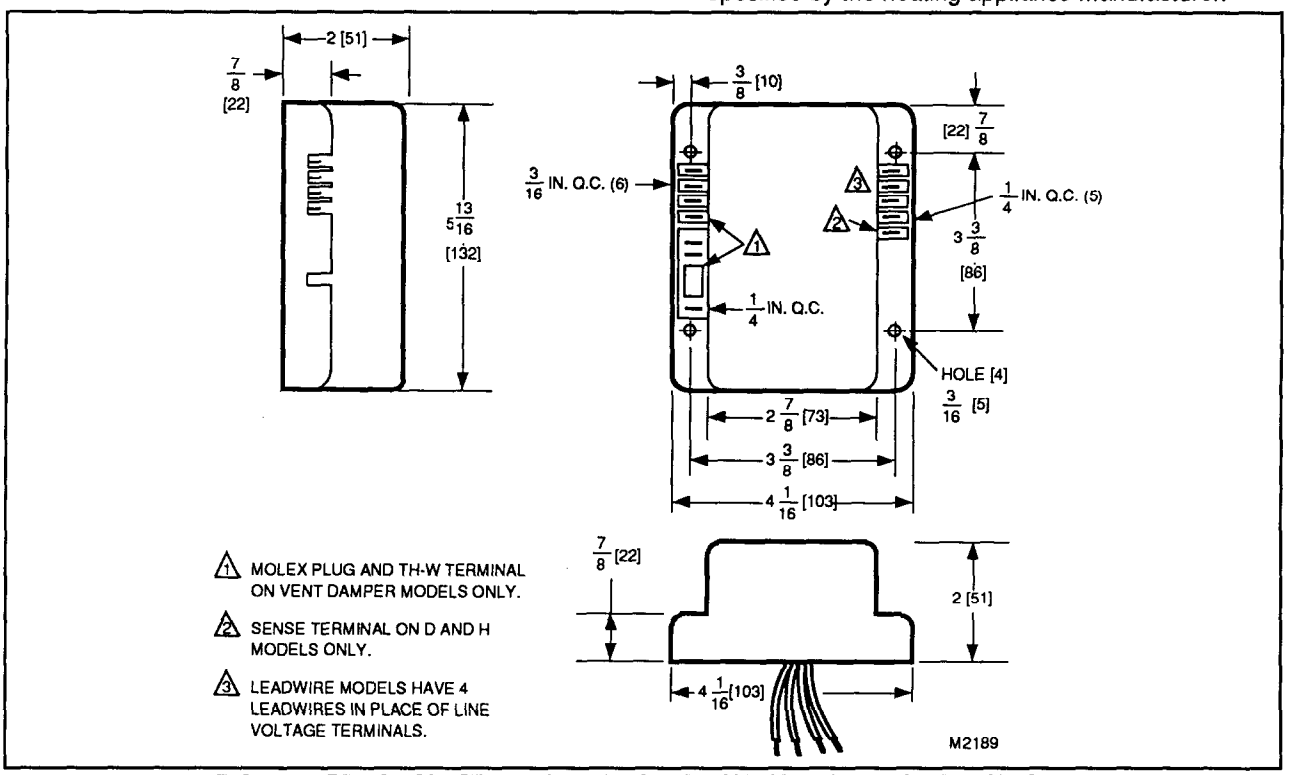

FIG. 1—APPROXIMATE S89/S890 DIMENSIONS IN In. [mm IN BRACKETS].

PLANNING THE INSTALLATION

Hot surface ignition systems are used on a wide variety of central heating equipment and on heating appliances such as agricultural equipment, industrial heating equipment and pool heaters. Some of these applications may make heavy demands on the controls, either because of frequent cycling, or because of moisture, corrosive chemicals, dust or excessive heat in the environment. In these situations, special steps may be required to prevent nuisance shutdowns and premature control failure. These applications require Honeywell Residential Division Engineering review; contact your Honeywell Sales Representative for assistance.

FREQUENT CYCLING

These controls are designed for use on space heating appliances that typically cycle 3 to 4 times an hour during the heating season and not at all during the cooling season. In an application with significantly greater cycling rates and closer to year-round use, we recommend monthly checkout because the controls may wear out more quickly.

WATER OR STEAM CLEANING

Once a module or gas control has been wet, it may operate unreliably and must be replaced. If the appliance is likely to be cleaned with water or steam, the controls and associated wiring should be covered so water or steam flow cannot reach them. The controls should be high enough above the bottom of the cabinet so they will not be subject to flooding or splashing during normal cleaning procedures. If necessary, shield the controls to protect them from splashing water. A NEMA 4 enclosure is recommended for the ignition module; see the Electronic Ignition Service Manual, form 70-6604.

HIGH HUMIDITY OR DRIPPING WATER

Over time, dripping water or high ambient humidity can create unwanted electrical paths on the module circuit board, causing the module to fail. *Never* install an appliance where water can drip on the controls.

In addition, high ambient humidity can cause the gas control to corrode, and finally to fail.

Where the appliance may be installed in a humid atmosphere, make sure air circulation around the module and gas control is adequate to prevent condensation. It's also important to regularly check out the system. A NEMA 4 enclosure may be needed for the ignition module; see the Electronic Ignition Service Manual, form 70-6604.

CORROSIVE CHEMICALS

Corrosive chemicals can also attack the module and gas control and eventually cause a failure. Where chemicals may be used routinely for cleaning, make sure the cleaning solution cannot reach the controls. Where chemicals are likely to be suspended in air, as in some industrial and agricultural applications, protect the ignition module from exposure with a NEMA 4 enclosure; see the Electronic Ignition Service Manual, form 70-6604.

DUST OR GREASE ACCUMULATION

Heavy accumulation of dust or grease may cause the controls to malfunction. Where dust or grease may be a problem, provide covers for the module and the gas control that will limit environmental contamination. A NEMA 4 enclosure is recommended for the ignition module; see the Electronic Ignition Service Manual, form 70-6604.

HEAT

The controls can be damaged by excessively high temperatures. Make sure the maximum ambient temperature at the control locations will not exceed the rating of the control. If the appliance normally operates at very high temperatures, insulation, shielding, and air circulation may be necessary to protect the controls. Proper insulation or shielding should be provided by the appliance manufacturer; make sure adequate air circulation is maintained when the appliance is installed.

INSTALLATION AND CHECKOUT

WHEN INSTALLING THIS IGNITION SYSTEM...

1. Read these instructions carefully. Failure to follow them could damage the components or cause a hazardous condition.
2. Check the ratings given in the instructions and on the components to make sure they are suitable for your application.
3. Installer must be a trained, experienced service technician.
4. After installation is complete, check out component operation as provided in these instructions.

WARNING

FIRE OR EXPLOSION HAZARD.
CAN CAUSE SERIOUS INJURY OR DEATH.

1. **The ignition module can malfunction if it gets wet, leading to accumulation of explosive gas:**
   - **Never install where water can flood, drip or condense on module.**
   - **Never try to use a module that has been wet—replace it.**

2. **Liquefied petroleum (LP) gas is heavier than air and will not vent upward naturally.**
   - **Do not operate electric switches, lights, or appliances until you are sure the appliance area is free of gas.**

CAUTION

1. Disconnect power supply before beginning wiring to prevent electrical shock or equipment damage.
2. If a new gas control is to be installed, turn off gas supply before starting installation. Conduct Gas Leak Test according to gas control manufacturer's instructions after the gas control is installed.
3. If module must be mounted near moisture or water, provide suitable waterproof enclosure.

PERFORM PREINSTALLATION SAFETY INSPECTION

If this is a replacement installation, check the appliance and venting system carefully before installing new module.

If a condition which could result in unsafe operation is detected, the appliance should be shut off and the owner advised of the unsafe condition. Any potentially unsafe condition must be corrected before proceeding with the installation.

MAINTENANCE REQUIREMENTS IN SEVERE ENVIRONMENTS

Regular preventive maintenance is important in any application, but especially so in agricultural and industrial applications because

- In many such applications, the equipment operates 100,000-200,000 cycles per year. Such heavy cycling can wear out the gas control in one to two years. A normal forced air furnace, for which the controls were originally intended, typically operates less than 20,000 cycles per year.
- Exposure to water, dirt, chemicals, and heat can damage the module or the gas control and shut down the control system. A NEMA 4 enclosure can reduce exposure to environmental contaminants. See Electronic Ignition Service Manual, form 70-6604.

The maintenance program should include regular checkout of the system as outlined under Checkout, page 11.

WARNING

FIRE OR EXPLOSION HAZARD
MAY CAUSE PROPERTY DAMAGE, SEVERE INJURY OR DEATH
Do not attempt to take the module apart or to clean it. Improper reassembly and cleaning may cause unreliable operation.

Maintenance frequency must be determined individually for each application. Some considerations are:

- *Cycling frequency.* Appliances that may cycle more than 20,000 times annually should be checked monthly.
- *Intermittent use.* Appliances that are used seasonally should be checked before shutdown and again before the next use.
- *Consequence of unexpected shutdown.* Where the cost of an unexpected shutdown would be high, the system should be checked more often.
- *Dusty, wet, or corrosive environment.* Since these environments can cause the controls to deteriorate more rapidly, the system should be checked more often. Protective enclosures, as outlined under "Planning the Installation", are recommended regardless of checkout frequency.

Any control should be replaced if it does not perform properly on checkout or troubleshooting. In addition, replace any module if it is wet or looks like it has ever been wet.

MOUNT IGNITION MODULE

Select a location close enough to the burner to allow a short, direct cable route to the igniter. Ambient temperature at the module must be within the range of minus 40° F to plus 175° F [minus 40° C to plus 79° C]. The module must be protected from water, moisture, corrosive chemicals and excessive dust and grease.

The module can be mounted in any position. Fasten securely with four No. 6-32 machine or No. 8 sheetmetal screws 1 in. [25 mm] long.

MOUNT THE SYSTEM CONTROLS

Mount any required controls, such as the gas control, hot surface igniter, flame sensor, thermostat, limit and transformer according to manufacturer's instructions.

WIRE THE SYSTEM

CAUTION

1. Check the wiring diagram furnished by the appliance manufacturer, if available, for circuits differing from the wiring hookups shown. Carefully follow any special instructions affecting the general procedures outlined below.
2. Disconnect the power supply before making wiring connections to prevent electrical shock or equipment damage.

IMPORTANT

1. All wiring must comply with applicable electrical codes and ordinances.
2. When installing the hot surface igniter, the leadwires should be kept as short as possible and should not be allowed to rest against grounded metal surfaces.
3. A common ground is required for the S89/S890 and the main burner. The 24 V (GND) terminal internally grounds one side of the transformer. Any auxiliary controls or limits must not be in the grounded leg. In addition, the appliance should be earth-grounded.
4. Make sure the transformer has adequate VA. The ignition module requires at least 0.2 A at 24 Vac. Add the current draws of all other devices in the control circuit, including the gas control, and multiply by 24 to determine the total VA requirement of these components. Add this total to 4.8 VA (for the ignition module). The result is the minimum transformer VA rating. Use a Class II transformer if replacement is required.
5. Check that L1 (hot) and L2 (neutral) are wired to the proper terminals. If L1 and L2 are interchanged, the S89/S890 will not detect the flame, and will go into safety shutdown.

Connect Igniter

Prepare wiring harness. See Igniter wiring, page 3.

1. On models with quick connects, use insulated 1/4 in. female quick connects to connect the wiring harness leads to the HSI terminals on the ignition module.
2. On models with leadwires, use solderless connectors to connect the wiring harness leads to the blue leads from the module.
3. Connect the wiring harness to the igniter.

Connect Vent Damper

The D80B Vent Damper can be used with all ignition modules, although the Molex plug provided on some modules simplifies wiring connections when used with the D80D Plug-In Vent Damper. *Once a module with vent damper plug has powered a vent damper circuit, it cannot be used in a gas system without a vent damper.* A non-replaceable fuse in the module blows on initial power-up. Once this fuse has blown the module won't work unless the vent damper is connected.

To connect the plug-in model to D80D:

1. Remove the plug from the terminal strip on the ignition module case and discard.
2. Using the wiring harness supplied, insert the matching pin plug into receptacle on case and other end to vent damper.

To connect the D80B, follow the wiring diagrams supplied with the vent damper or see Fig. 5 for typical connections.

Connect Ignition Module

1. Connect remaining system components to the ignition module terminals as shown in the appropriate wiring diagram, Figs. 2 to 10.
   - Figs. 2 and 3 are basic circuits for a heating only atmospheric burner system. Fig. 2 shows the C,G and J models with combination igniter-sensor; Fig. 3 shows the D,H models with separate igniter and sensor.
   - Figs. 4 and 5 show the C,G and J models with a D80 Vent Damper. *Never* use a vent damper in an LP gas system or in a fan-assisted combustion system.
   - Figs. 6-10 show S89C,G,J/S890C,G,J with combination igniter-sensor in a variety of systems, with alternate connections for vent damper plug models. Remember, however, that a vent damper should not be used in a fan-assisted combustion system or an LP gas system and that the vent damper plug must not be removed except to connect a D80D with the plug-in cable. S89D,H/S890D,H with separate igniter and sensor can be substituted in these hookups by simply connecting the sensor as shown in Fig. 3.
2. Refer to heating appliance manufacturer's instructions for wiring auxiliary controls.
3. Adjust thermostat heat anticipator to match system current draw. The current draw equals the total current required for the ignition module (0.2 A) plus the gas control and any other auxiliary equipment in the control circuit.

Connect Gas Control

Use No. 18 gauge solid or stranded wire. Use 3/16 in. female quick connects for module connections. Connect to gas control terminals as shown in wiring diagrams, using terminals appropriate to the gas control.

Ground Control System

The igniter, flame sensor and ignition module must share a common ground with the main burner. Use thermoplastic insulated wire with a minimum rating of 105° C [221° F] for the ground wire; asbestos insulation is not acceptable. If necessary, use a shield to protect the wire from radiant heat generated by the burner. Connect the ground wire as follows:

1. Fit one end of the ground wire with a female 3/16 in. quick-connect terminal and connect it to the male quick-connect GND(BURNER) terminal on the ignition module.
2. Strip the other end of the wire and fasten it under the igniter bracket mounting screw. If necessary, use a shield to protect the ground wire from radiant heat.
3. The burner serves as the common grounding area. If there is not good metal-to-metal contact between the burner and ground, run a lead from the burner to ground.

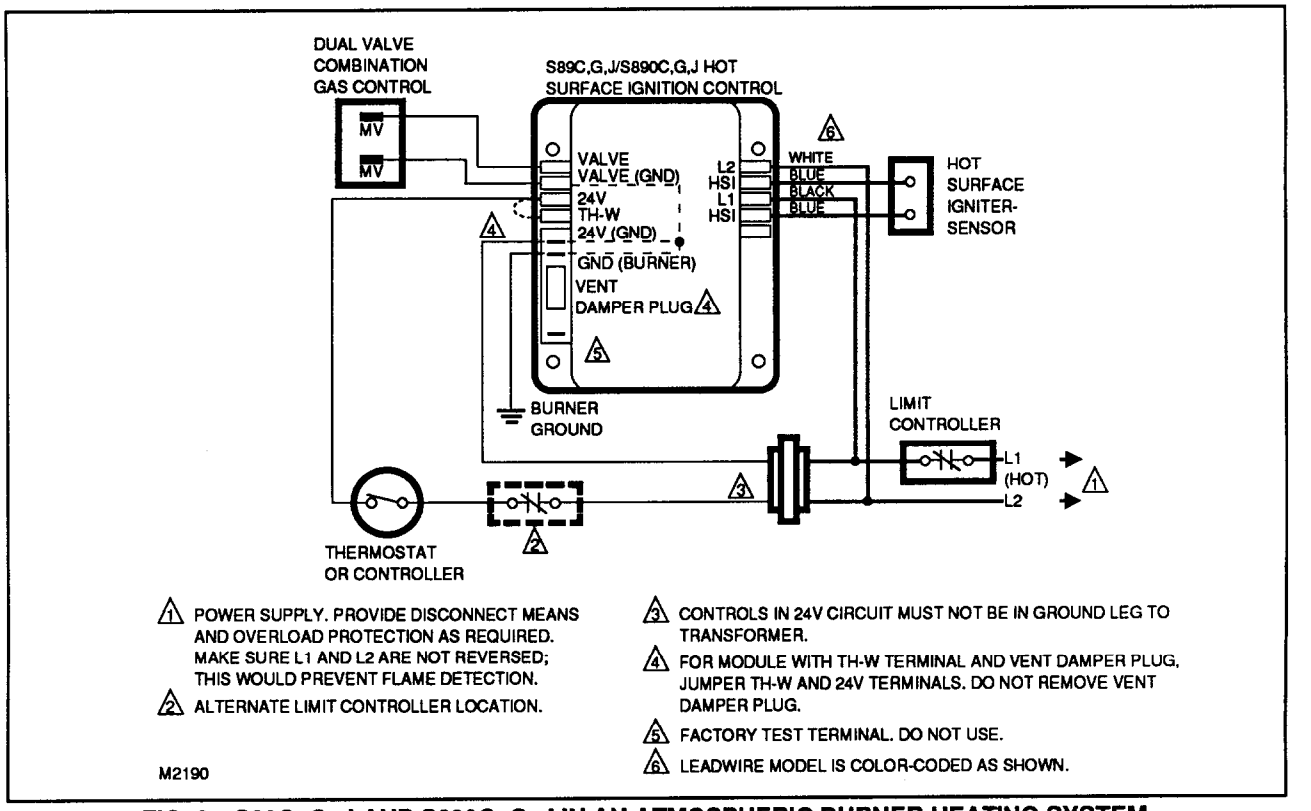

FIG. 2—S89C, G, J AND S890C, G, J IN AN ATMOSPHERIC BURNER HEATING SYSTEM.

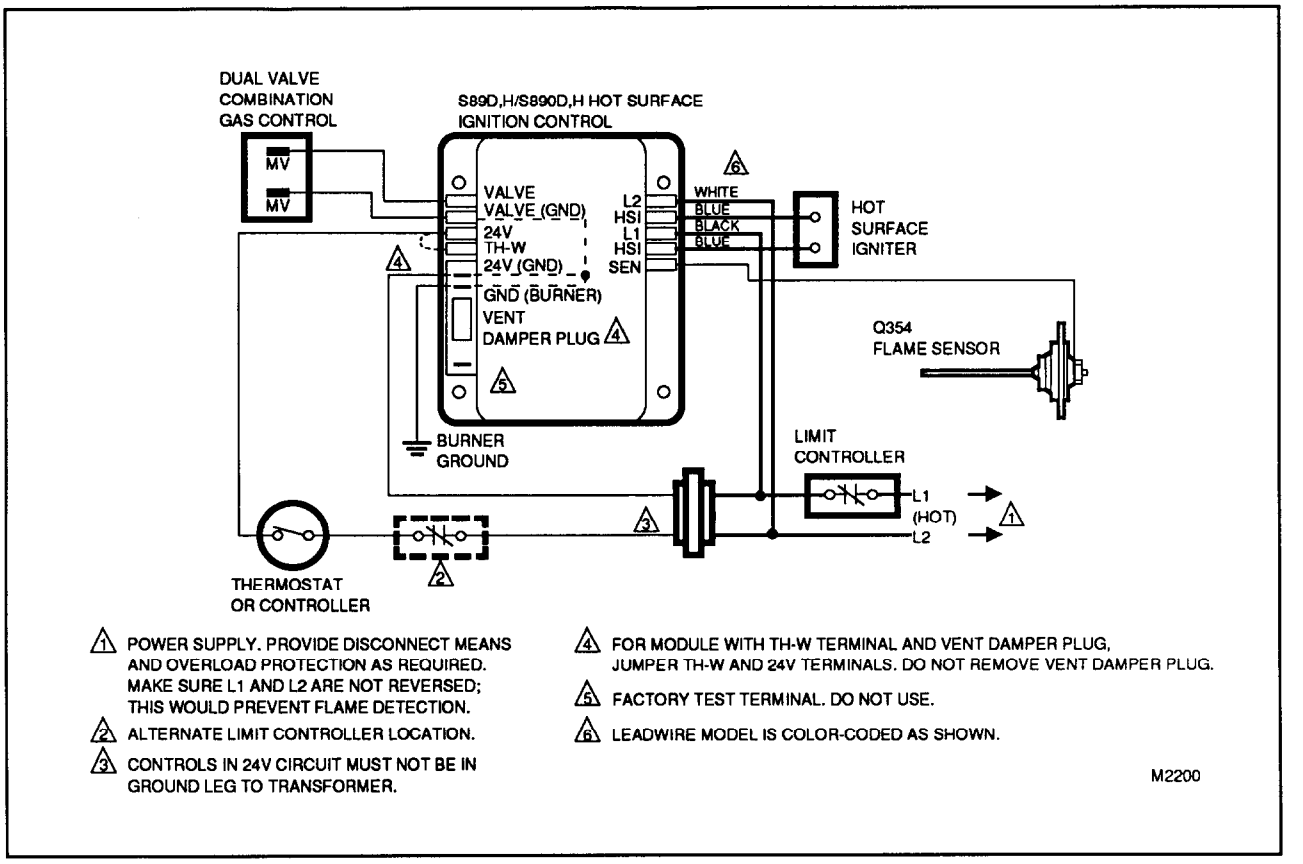

1 POWER SUPPLY. PROVIDE DISCONNECT MEANS AND OVERLOAD PROTECTION AS REQUIRED. MAKE SURE L1 AND L2 ARE NOT REVERSED; THIS WOULD PREVENT FLAME DETECTION.

2 ALTERNATE LIMIT CONTROLLER LOCATION.

3 CONTROLS IN 24V CIRCUIT MUST NOT BE IN GROUND LEG TO TRANSFORMER.

4 FOR MODULE WITH TH-W TERMINAL AND VENT DAMPER PLUG, JUMPER TH-W AND 24V TERMINALS. DO NOT REMOVE VENT DAMPER PLUG.

5 FACTORY TEST TERMINAL. DO NOT USE.

6 LEADWIRE MODEL IS COLOR-CODED AS SHOWN.

M2200

FIG. 3—S89D,H AND S890D,H IN AN ATMOSPHERIC BURNER HEATING SYSTEM.

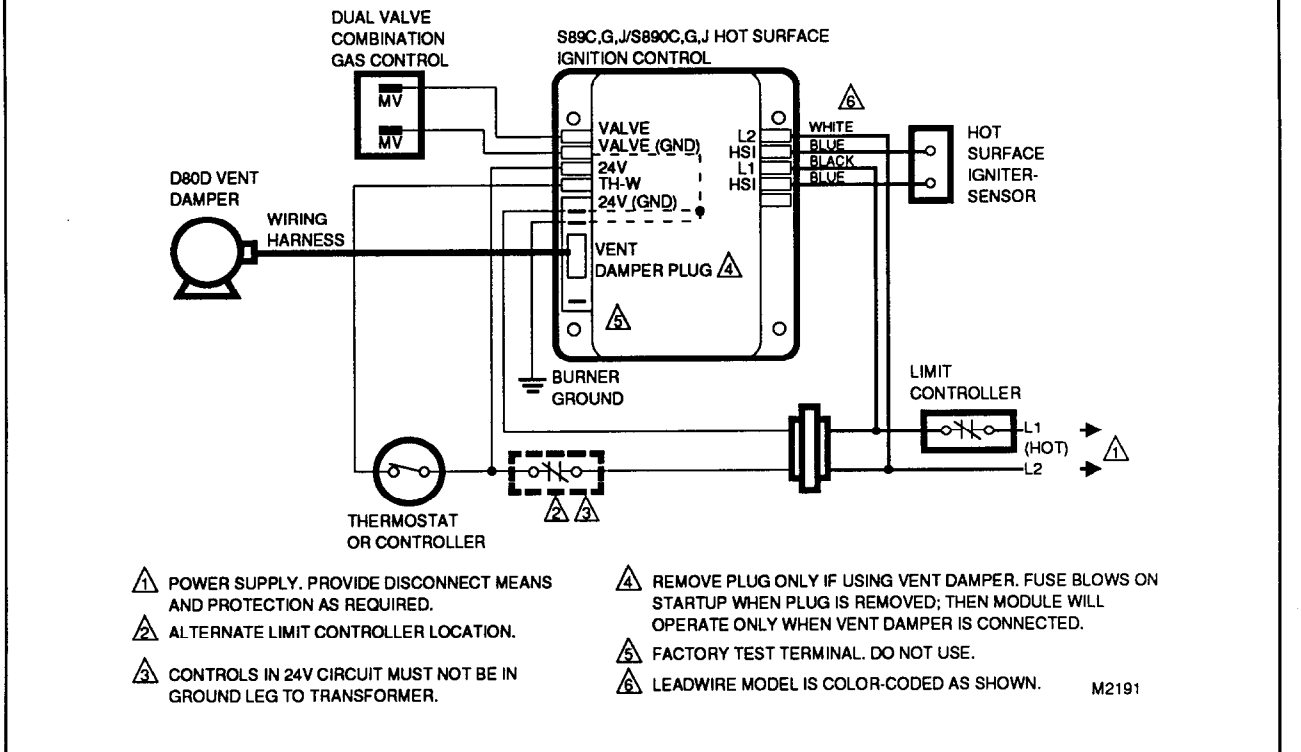

1 POWER SUPPLY. PROVIDE DISCONNECT MEANS AND PROTECTION AS REQUIRED.

2 ALTERNATE LIMIT CONTROLLER LOCATION.

3 CONTROLS IN 24V CIRCUIT MUST NOT BE IN GROUND LEG TO TRANSFORMER.

4 REMOVE PLUG ONLY IF USING VENT DAMPER. FUSE BLOWS ON STARTUP WHEN PLUG IS REMOVED; THEN MODULE WILL OPERATE ONLY WHEN VENT DAMPER IS CONNECTED.

5 FACTORY TEST TERMINAL. DO NOT USE.

6 LEADWIRE MODEL IS COLOR-CODED AS SHOWN.

M2191

FIG. 4—S89C, G, J AND S890C, G, J IN AN ATMOSPHERIC BURNER HEATING SYSTEM WITH THE D80D VENT DAMPER.

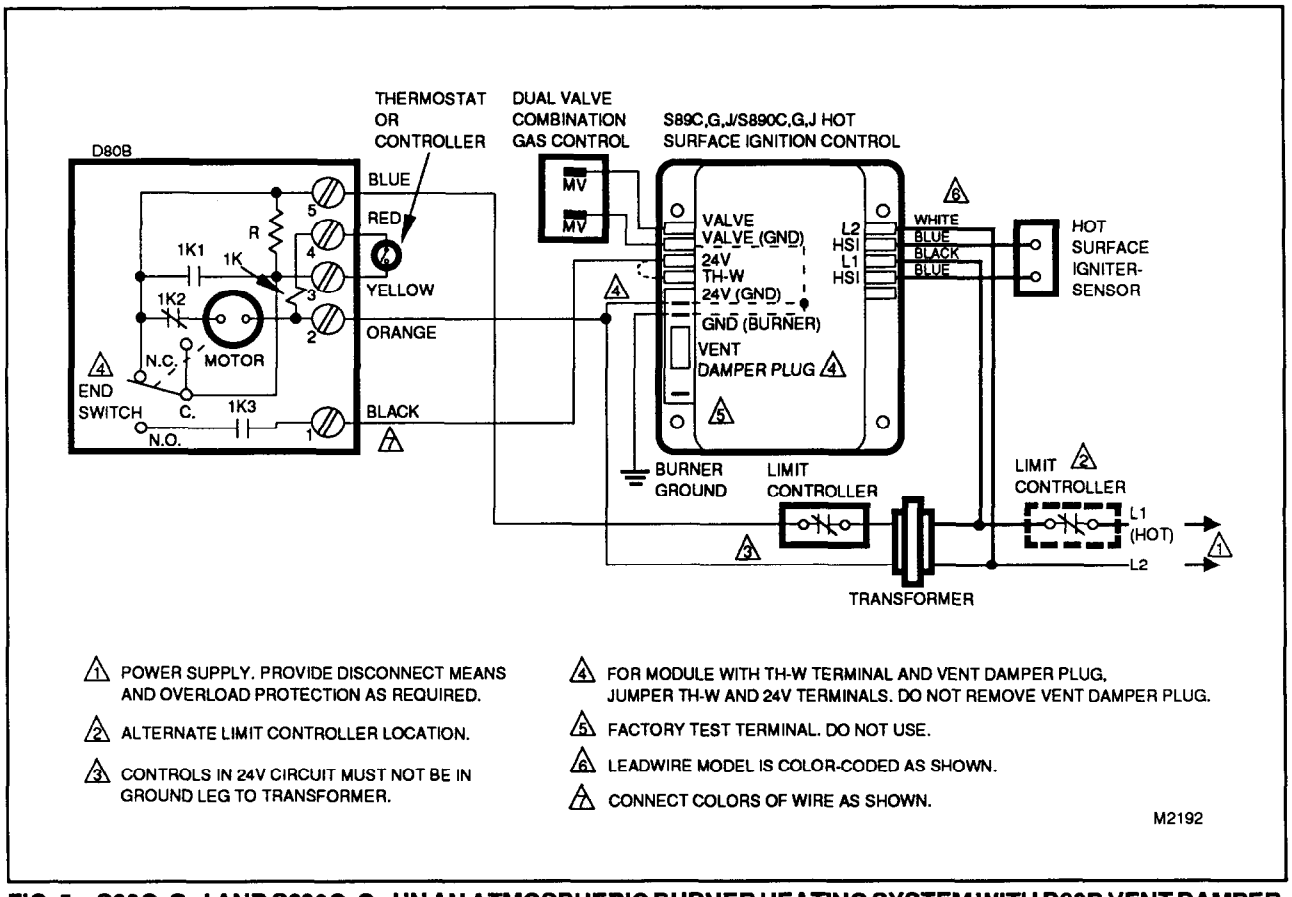

FIG. 5—S89C, G, J AND S890C, G, J IN AN ATMOSPHERIC BURNER HEATING SYSTEM WITH D80B VENT DAMPER.

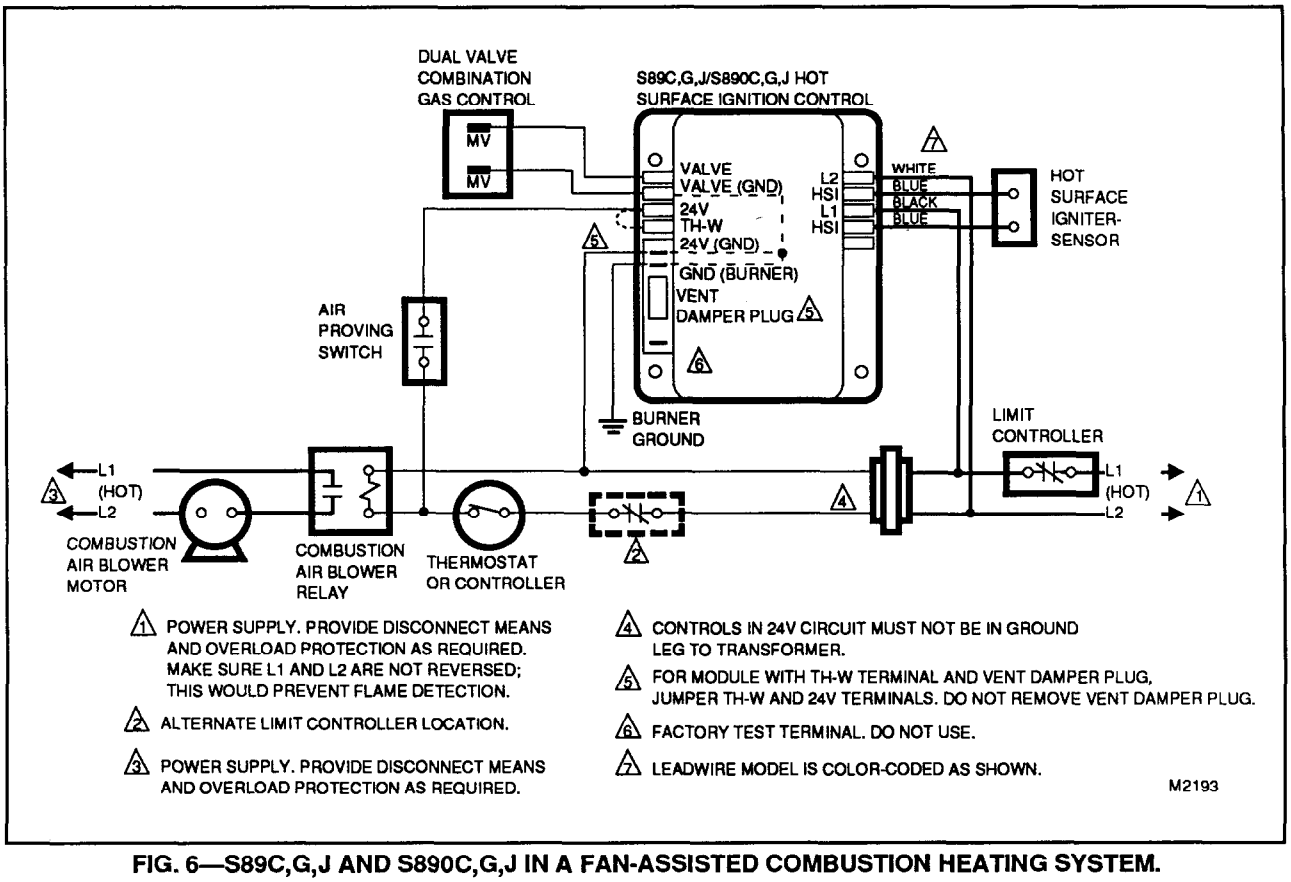

FIG. 6—S89C,G,J AND S890C,G,J IN A FAN-ASSISTED COMBUSTION HEATING SYSTEM.

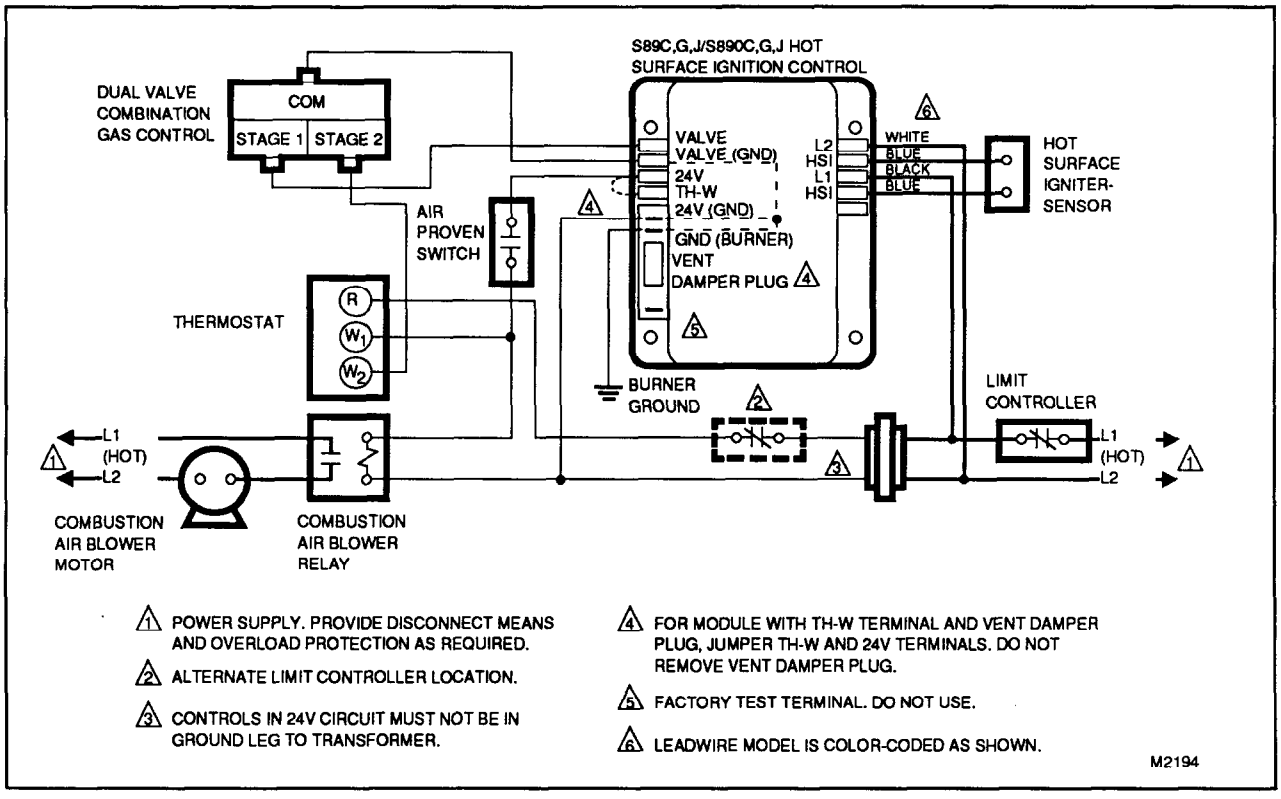

FIG. 7—S89C,G,J AND S890C,G,J IN A TWO STAGE FAN-ASSISTED COMBUSTION HEATING SYSTEM.

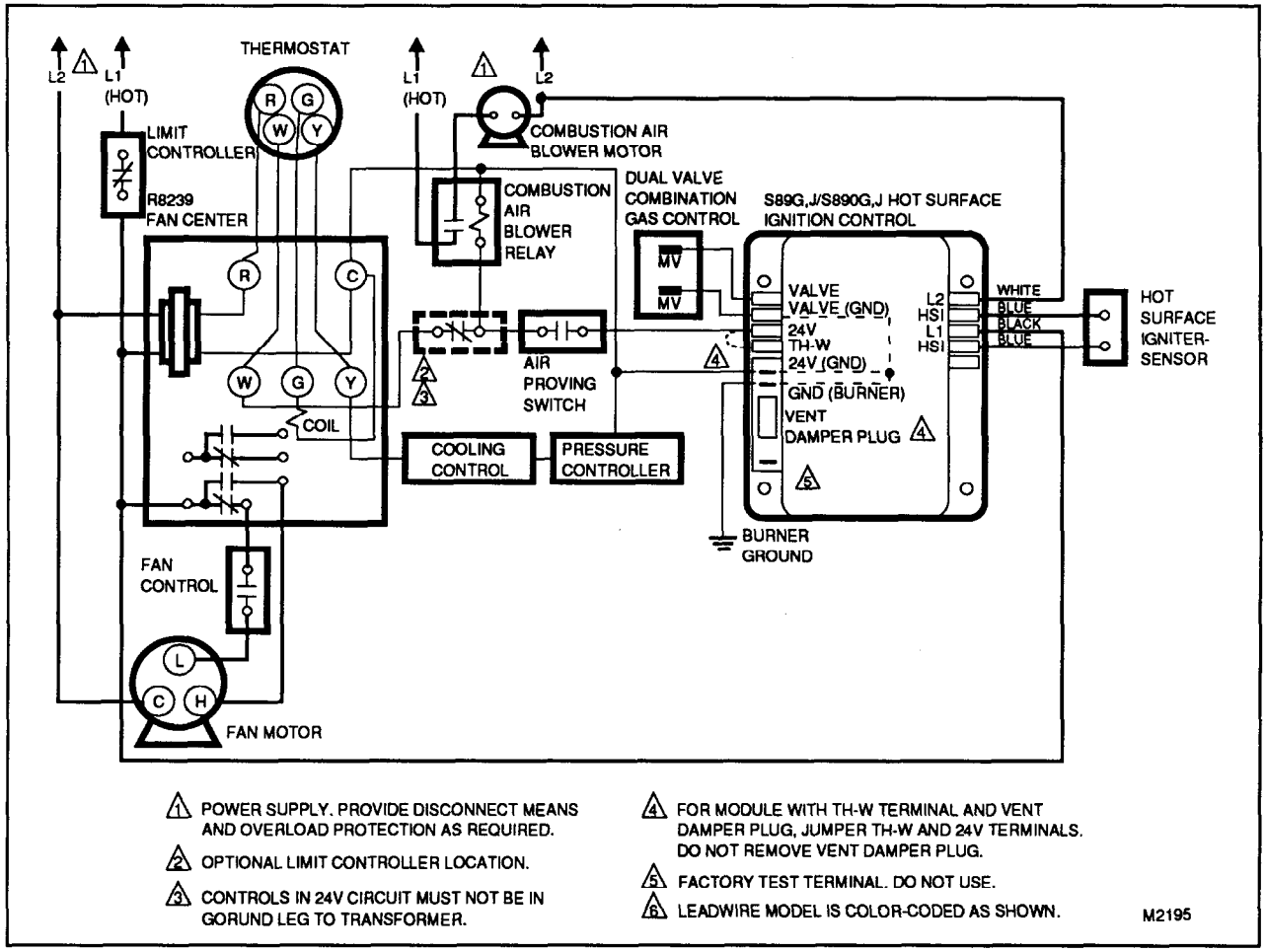

FIG. 8—S89C,G,H AND S890C,G,H IN A FAN-ASSISTED COMBUSTION HEATING-CENTRAL COOLING SYSTEM.

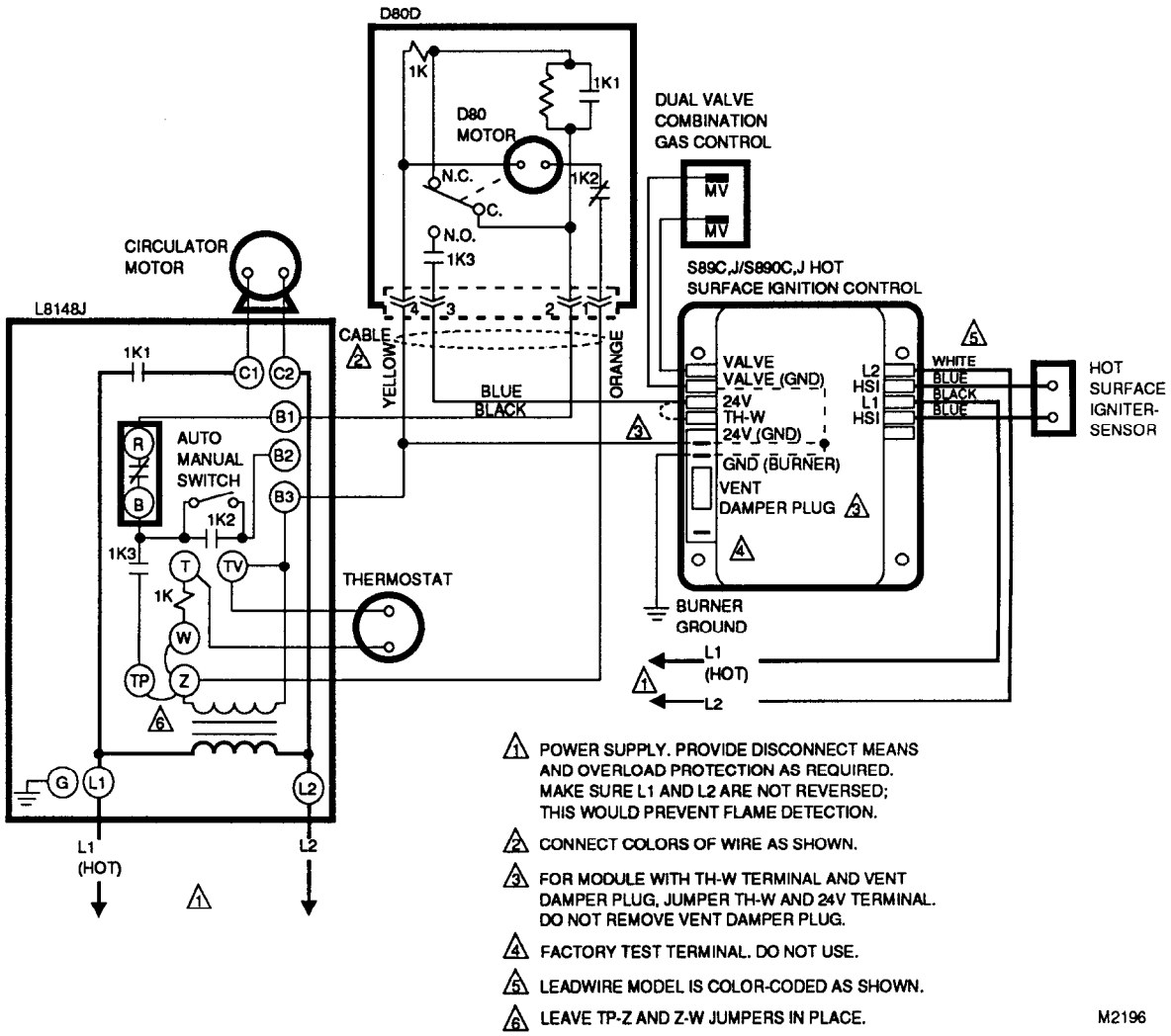

FIG. 9—S89C,J AND S890C,J IN A HYDRONIC HEATING SYSTEM WITH ATMOSPHERIC BURNER.

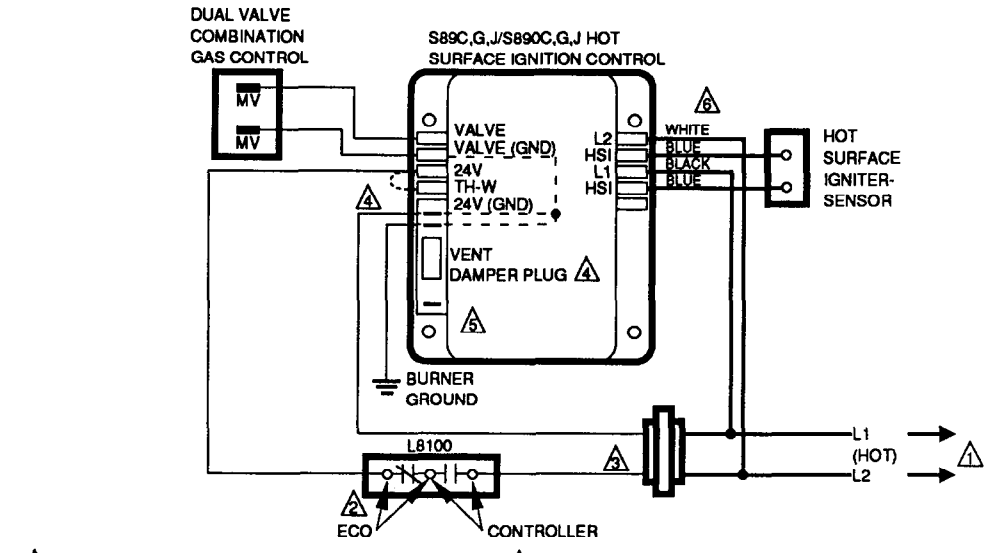

1. POWER SUPPLY. PROVIDE DISCONNECT MEANS AND OVERLOAD PROTECTION AS REQUIRED. MAKE SURE L1 AND L2 ARE NOT REVERSED; THIS WOULD PREVENT FLAME DETECTION.
2. ECO SWITCH SHUTS DOWN SYSTEM IF TANK TEMPERATURE EXCEEDS 210° F [99 C]
3. CONTROLS IN 24V CIRCUIT MUST NOT BE IN GROUND LEG TO TRANSFORMER.
4. FOR MODULE WITH TH-W TERMINAL AND VENT DAMPER PLUG, JUMPER TH-W AND 24V TERMINALS. DO NOT REMOVE VENT DAMPER PLUG.
5. FACTORY TEST TERMINAL. DO NOT USE.
6. LEADWIRE MODEL IS COLOR-CODED AS SHOWN.

M2197

FIG. 10—S89C,G,J AND S890C,G,J IN A COMMERCIAL WATER HEATING SYSTEM.

CHECKOUT

Check out the control system:

- At initial installation of the appliance.
- As part of regular maintenance procedures. Maintenance intervals are determined by the application. See PLANNING THE INSTALLATION, page 4, for more information.
- As the first step in troubleshooting.
- Any time work is done on the system.

WARNING

FIRE OR EXPLOSION HAZARD.
CAN CAUSE PROPERTY DAMAGE, SEVERE INJURY OR DEATH.

1. **If you smell gas or suspect a gas leak, turn off gas at manual service valve and evacuate the house. Do not try to light any appliance, do not touch any electrical switch or telephone in the building until you are sure no spilled gas remains.**
2. **Gas leak test must be done as described in Steps 1 and 5 below on initial installation and any time work is done involving the gas piping.**

STEP 1: Perform Visual Inspection.

☐ With power off, make sure all wiring connections are clean and tight.

☐ Turn on power to appliance and ignition module.

☐ Open manual shutoff valves in the gas line to the appliance.

☐ Do gas leak test upstream of gas control if piping has been disturbed.

GAS LEAK TEST: Paint pipe joints with rich soap and water solution. Bubbles indicate gas leak. Tighten joints to stop leak.

STEP 2: Review Normal Operating Sequence (Fig. 12) and Module Specifications.

☐ See OPERATION, page 12, and SPECIFICATIONS, page 2.

STEP 3: Reset the Module.

☐ Turn the thermostat to its lowest setting.

☐ Wait one minute.

As you do Steps 4 and 5, watch for points where operation deviates from normal. Refer to Troubleshooting Chart (Fig. 13) to correct problem.

STEP 4: Check Safety Lockout Operation.

☐ Turn gas supply off.

☐ Set thermostat or controller above room temperature to call for heat.

☐ Watch for igniter warmup either immediately or following prepurge. See SPECIFICATIONS, page 2.

☐ Time the length of time gas control stays open. The time should not exceed the following:

4 sec. model—5.5 sec.
6 sec. model—7.5 sec.
11 sec. model—15.0 sec.
15 sec. model—22.0 sec.

☐ *Three try for ignition modules only* (S89G,H; S890G,H): Watch for start of 30 sec. min. purge, followed by 34 sec. nom. igniter warmup and second try for ignition. After a third purge, warmup and trial for ignition sequence, these modules lock out.

☐ Open manual gas control knob and make sure no gas is flowing to burner.

☐ Set thermostat below room temperature and wait one minute before continuing.

STEP 5: Check Normal Operation.

☐ Set thermostat or controller above room temperature to call for heat.

☐ Make sure burner lights smoothly without flashback.

☐ Make sure burner operates smoothly without floating, lifting, or flame rollout to the furnace vestibule or heat buildup in the vestibule.

☐ If gas line has been disturbed, complete gas leak test.

GAS LEAK TEST: Paint gas control gasket edges and all pipe connections downstream of gas control with rich soap and water solution. Bubbles indicate gas leaks. Tighten joints and screws or replace component to stop gas leak.

☐ Turn thermostat or controller below room temperature. Make sure flame goes out.

STEP 6: Check Burner Flame Condition.

The igniter-sensor or sensor must be constantly immersed in flame. Check burner flame condition as shown in Fig. 11. If necessary, improve the flame condition or relocate the sensor to a place on the main burner where condition is better. Do not relocate igniter or igniter-sensor.

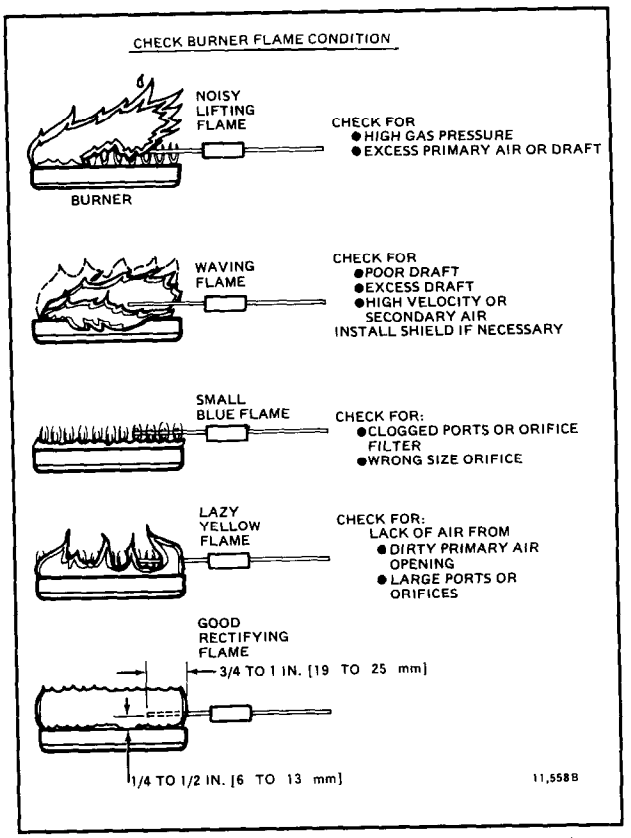

FIG. 11—CHECK BURNER FLAME CONDITION.

OPERATION

The S89 and S890 are direct ignition controls used with a hot surface igniter. They provide operating control and 100 percent shutdown on ignition failure or loss of main burner flame in central heat furnaces and heating appliances.

Module operation is in four phases—prepurge (S890 only), igniter warmup, trial for ignition and burner operation. Modules offer either one or three trials for ignition. Fig. 12 shows the normal operating sequence.

PREPURGE

When the S890 is used in a fan-assisted combustion system, the combustion air blower starts on a call for heat from the thermostat. On proof of airflow, the air proving switch closes and energizes the S890. When the S890 is used in an atmospheric system, the call for heat energizes the module.

In either case, the S890 first initiates a 30 sec. minimum delay to allow system prepurge. After prepurge, the S890 energizes the igniter to start the igniter warmup.

IGNITER WARMUP

Following prepurge timing (S890) or call for heat from the thermostat (S89), the module energizes the hot surface igniter for a 34 sec. nominal warmup period, during which the gas control is closed.

TRIAL FOR IGNITION

Following the warmup period, the gas control opens for a timed trial for ignition, allowing gas flow to the main burner. Near the end of the trial for ignition period the igniter shuts off to allow the rectification sensor to sense presence of flame. On modules with specified Ignition Activation Period (IAP) timing the igniter is on for 2 or 4 sec. maximum, depending on model. On other modules, the igniter shuts off about 1 sec. prior to lockout. On all modules, the flame sense time, which is the time that the gas control is still open between igniter shutoff and lockout is at least 0.75 sec. If lightoff is successful, the burner operation phase begins.

BURNER OPERATION

When flame is detected, a flame rectification circuit is completed between the sensor and burner ground. The flame sensing circuit in the module detects the flame current and holds the safety lockout timer in the reset (normal) operation condition.

When the call for heat ends, the module and gas control are de-energized. The gas control closes, stopping gas flow to the burner.

SAFETY SHUTDOWN

The S89 and S890 provide 100 percent shutoff, or safety lockout on ignition failure or loss of established flame. C,D and J models of the S89 and S890 lock out after one trial for ignition. G and H models lock out after three trials for ignition.

One Trial for Ignition Modules

If no flame is sensed by the end of the timed trial for ignition, the gas control closes and the module locks out. It must be manually reset by removing power or setting the thermostat below room temperature for at least 45 seconds.

If the burner lights normally but goes out during the run cycle, the gas control closes and the module initiates a warmup period followed by one trial for ignition. If flame is not established, the gas control closes and the module locks out, requiring manual reset.

Three Trial for Ignition Modules

If no flame is sensed by the end of the first timed trial for ignition, the gas control closes and the module initiates a second 30 sec. minimum purge cycle, followed by warmup and a second trial for ignition. If flame is not established the purge, warmup, trial for ignition cycle is repeated a third time. If flame is still not established following the third trial, the gas control closes and the module locks out. It must be manually reset by removing power or setting the thermostat below room temperature for at least 45 sec.

If the burner goes out during the run cycle, the gas control closes and the module checks for the number of ignition trials performed during the current call for heat. If the number is less than three, the module initiates a purge, warmup and trial for ignition. After the third trial during a single call for heat, the module locks out. The module must be manually reset following lockout.

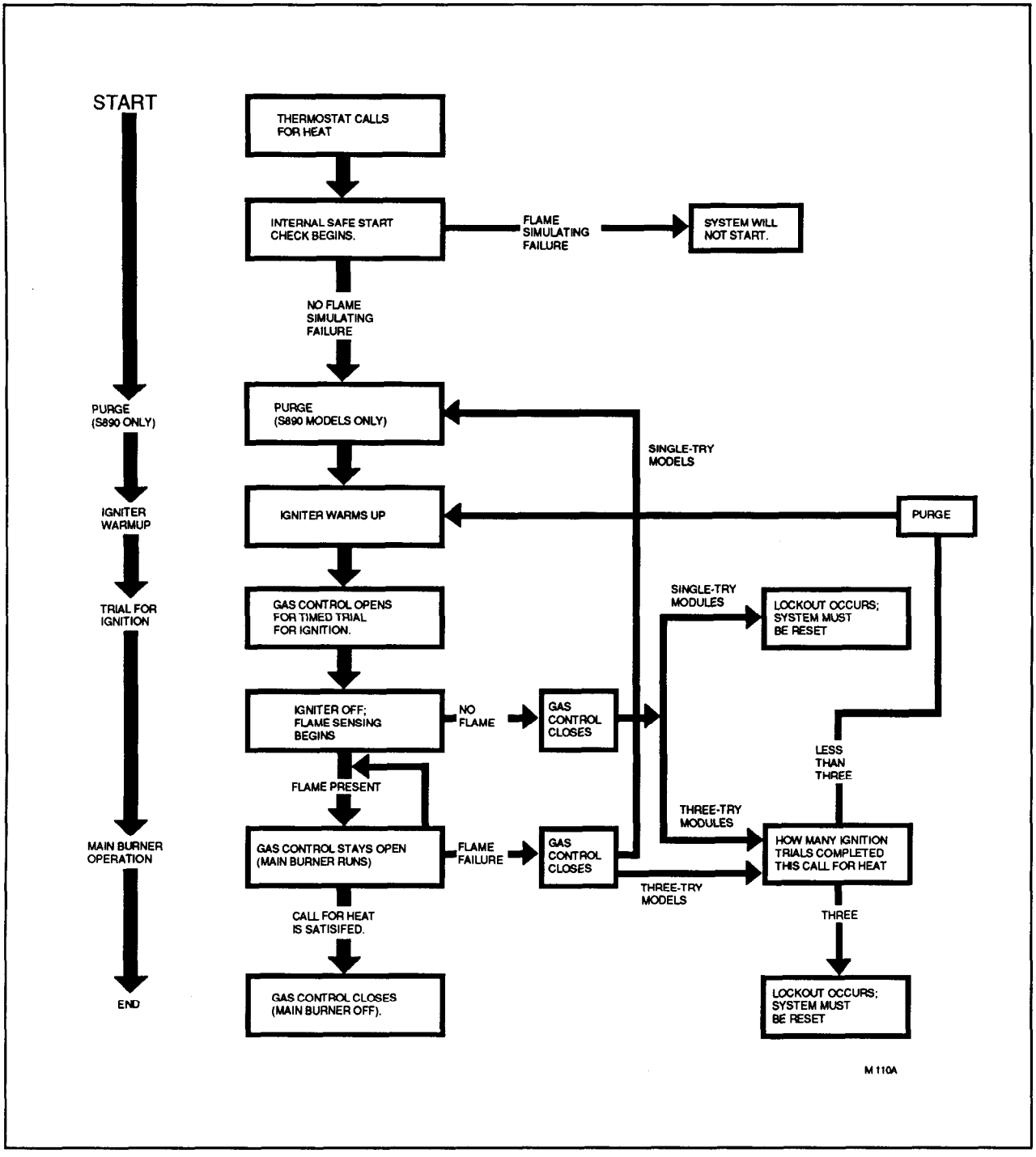

FIG. 12—S89/S890 NORMAL OPERATING SEQUENCE.

TROUBLESHOOTING AND SERVICE

IMPORTANT

1. The following service procedures are provided as a general guide. Follow appliance manufacturer's service instructions if available.
2. All meter readings must be taken within the trial for ignition period. Once the ignition period ends, the system must be reset by setting the thermostat down for at least 45 sec. before continuing.
3. If any component does not function properly, make sure it is correctly installed and wired before replacing it.
4. The ignition module cannot be repaired. If it malfunctions, it must be replaced.
5. Only trained, experienced service technicians should service direct ignition systems.

Perform the checkout steps on page 11 as the first step in troubleshooting. Then check the troubleshooting guide (Fig. 13) and the schematic diagram (Fig. 14) to pinpoint the cause of the problem.

Following troubleshooting, perform the checkout procedure (page 11) again to be sure system is operating normally.

IGNITION SYSTEM CHECKS

STEP 1: Check igniter wire harness.

Make sure:

☐ Ignition wire does not touch any metal surface.

☐ Connections to the module and the igniter-sensor are clean and tight.

☐ Ignition wire provides good electrical continuity.

STEP 2: Check ignition system grounding. *Nuisance shutdowns are often caused by a poor or erratic ground.*

☐ A common ground is required for the module, igniter, flame sensor and main burner.

— Check for good metal-to-metal contact between the igniter bracket and the main burner.

— Check the ground lead from the GND (BURNER) terminal on the module to the igniter bracket. Make sure connections are clean and tight. If the wire is damaged or deteriorated, replace it with No. 14-18 gauge, moisture-resistant, thermoplastic insulated wire with 105° C [221° F] minimum rating. Use a shield if necessary to protect the ground wire from radiant heat.

— Check temperature at the igniter ceramic or flame sensor insulator. Excessive temperature will permit leakage to ground. Provide shield if temperature exceeds rating of igniter or sensor.

— If flame sensor or bracket is bent out of position, restore to correct position.

— Replace igniter and sensor or igniter-sensor with identical unit if insulator is cracked.

STEP 3: Check flame sensing circuit.

☐ Make sure burner flame is capable of providing a good rectification signal. See Fig. 11.

☐ Make sure about 3/4 to 1 in. of the flame sensor or igniter-sensor is continuously immersed in the flame for best flame signal. See Fig. 11. Bend the bracket or flame sensor, or relocate the sensor as necessary. Do *not* relocate an igniter or combination igniter-sensor.

☐ Check for excessive (over 1000° F [538° C]) temperature at ceramic insulator on flame sensor. Excessive temperature can cause short to ground; move sensor to cooler location or shield insulator. Do *not* relocate an igniter or combination igniter-sensor.

☐ Check for cracked igniter-sensor or sensor ceramic insulator, which can cause short to ground, and replace unit if necessary.

- Make sure electrical connections are clean and tight. Replace damaged wire with moisture-resistant No. 18 wire rated for continuous duty up to 105° C [221° F].

☐ If the igniter is other than a Norton 201 or 271, make sure it meets the following specifications.

- Igniter must reach 1000° C [1832° F] within 36 seconds with 102 Vac applied.
- Igniter must maintain at least 500 M ohms insulation resistance between the igniter leadwires and the igniter mounting bracket.
- Igniter must not develop an insulating layer on its surface (over time) which would prevent flame sensing.
- Igniter surface area immersed in flame must not exceed 1/4 of the grounded area immersed in flame. This would prevent flame sensing.
- Igniter current draw at 132 Vac must not exceed 5 A.

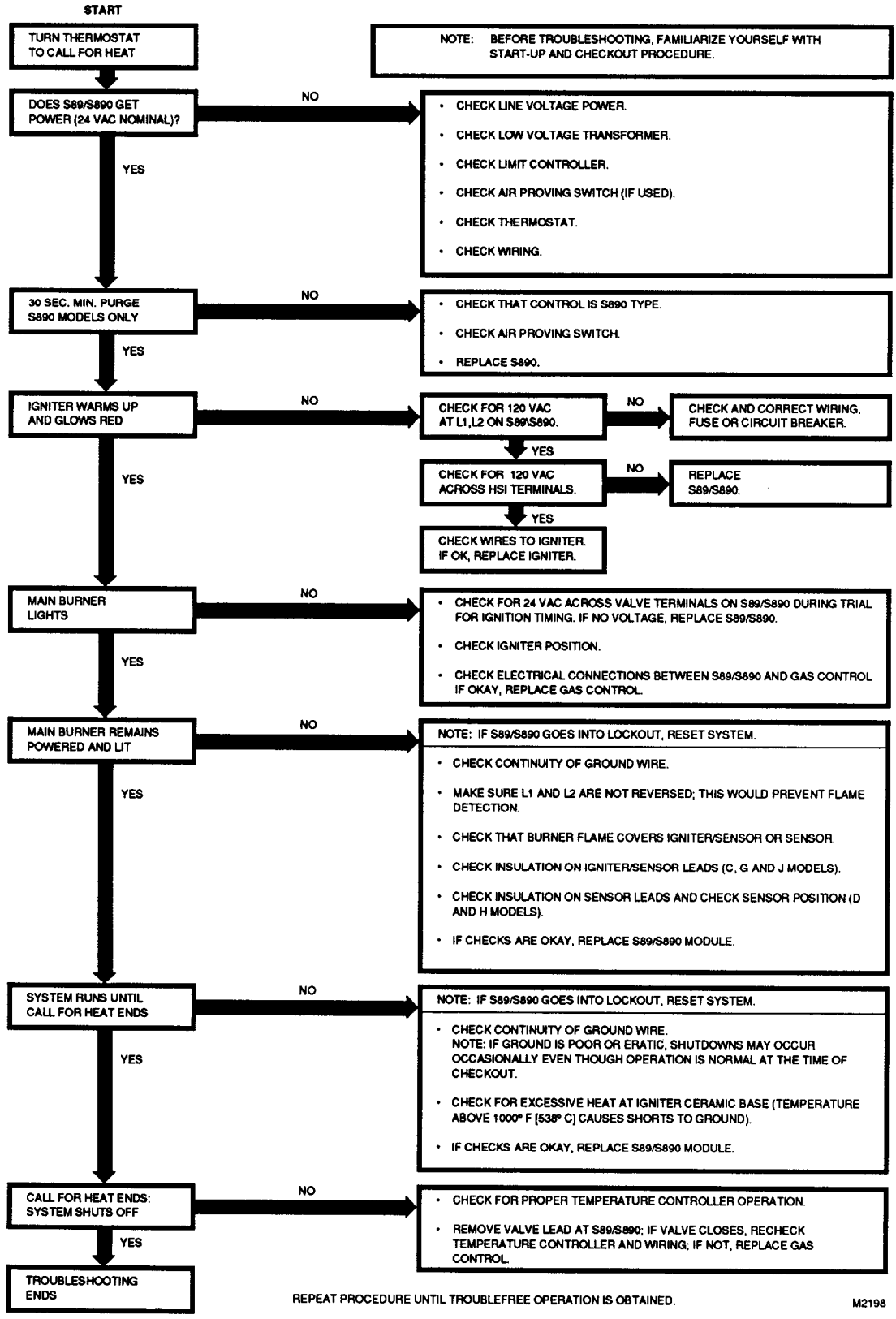

FIG. 13—S89, S890 TROUBLESHOOTING SEQUENCE.

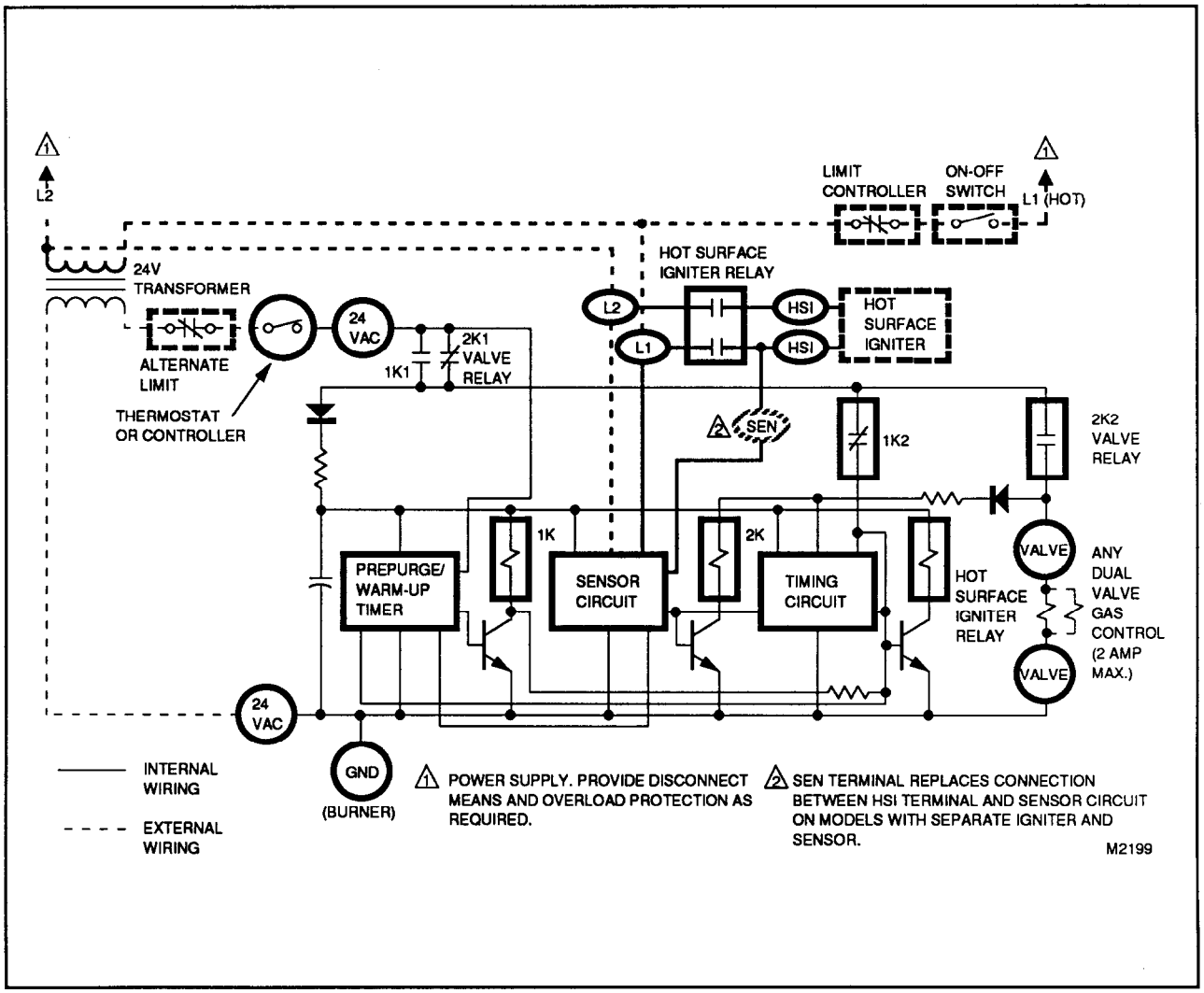

FIG. 14—S89/S890 SIMPLIFIED SCHEMATIC.

Honeywell Inc.
1885 Douglas Drive N.
Golden Valley, MN 55422-4386

International Sales Offices in all principal cities of the world. Manufacturing in Australia, Canada, Finland, France, Germany, Japan, Mexico, Netherlands, Spain, Taiwan, United Kingdom, U.S.A.

PRINTED IN U.S.A.

QUALITY IS KEY