Robertshaw®

RS4110 RS4220 RS4320
RS5110 RS5220
RS6110 RS6220 RS6320

352-00060-001 Rev B

INSTALLATION MANUAL



RS4000 Series



RS5000 Series



RS6000 Series

QUICK START

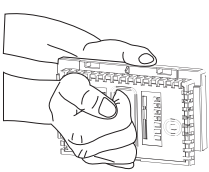

STEP 1 Pull backplate straight out to remove

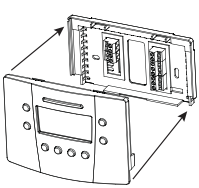

STEP 2 Install backplate on the wall and wire

STEP 3 Push front onto backplate

STEP 4 Remove tape on cover

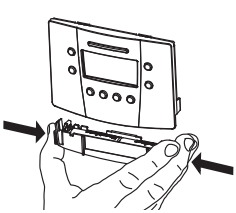

STEP 5 Rotate cover up and remove battery tray

STEP 6 Place batteries in tray and place in thermostat

Thank you for purchasing a Robertshaw® thermostat. This manual will describe how to install and test the Robertshaw single stage thermostats RS4110, RS5110, RS6110, two stage RS4220, RS5220, RS6220, and three stage* RS4320, RS6320 thermostats. For complete operation instructions, refer to the Robertshaw User Manual.

Use the model number to identify your thermostat.

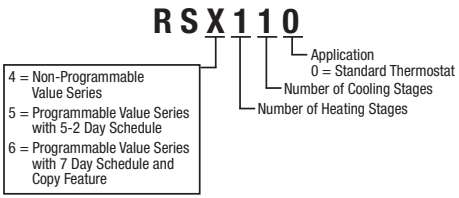

These thermostats have three main parts:

A. The backplate – mounts to the wall and has wire connections.

B. The body – snaps to the backplate and contains the electronics and programming buttons.

C. The cover – snaps to the top of the body and swings up to give access to the programming buttons.

Recycling Thermostat

If this thermostat is replacing a thermostat that contains mercury in a sealed tube, do not place your old thermostat in the garbage. Contact your local waste management authority for instructions regarding proper disposal of the thermostat. If you have any questions, call Robertshaw technical support at 1-844-362-4822.

* Three stages of heating available for heat pump applications only.

⚠ IMPORTANT SAFETY INFORMATION WARNING:

- Always turn off power at main fuse or circuit breaker panel before installing, removing, cleaning, or servicing thermostat.
- Read all the information in this manual before installing this thermostat.
- This is a 24V AC low-voltage thermostat. Do not install on voltages higher than 30V AC.
- All wiring must conform to local and national building and electrical codes and ordinances.
- This is a dual powered thermostat that will operate on 24V AC or batteries.
- Do not short (jumper) across terminals on the gas valve or at the system control to test installation. This will damage the thermostat and void the warranty.
- Do not connect ground to any terminal in this unit.
- This thermostat is configured with automatic compressor protection to prevent damage because of short cycling or extended power outages. Short cycle protection provides a delay between compressor cycles on heat pumps.

Replacing Existing Thermostat

1. Turn off power to heating and cooling system.
2. Remove cover from old thermostat to expose wires.
3. Disconnect wires one at a time from existing terminals. Use enclosed labels to mark existing wires. Refer to cross references in Table 1 if existing wiring does not directly match the labels.
4. Remove existing thermostat base from wall.

Table 1

Old Terminal	New Label	Description
R, RH/R, V-VR or VR-R	R/RH	24V AC Return
RC	RC	24V AC Cooling Transformer
C, X or B	C	24V AC Transformer Common Side
F or G	G	Fan Control Relay
Y, Y1 or M	Y1	1st Stage Cooling Circuit
W1 or W	W1	1st Stage Heating Circuit
Y2	Y2	2nd Stage Cooling Circuit
W2 or W-U	W2	2nd Stage Heating Control
W3	E	3rd Stage Heating Control
E	E	Emergency Heating Control

Installing the Robertshaw Thermostat Base

NOTE: For new installations, mount the thermostat on an inside wall, five feet above the floor. Do not install behind a door, in a corner, near air vents, in direct sunlight, or near any heat or steam generating fixtures. Installation at these locations will affect thermostat operation.

1. Be certain power is off to the heating and cooling systems.
2. Remove the backplate by placing your finger through the wire opening. Pull the backplate straight out from the body.
3. Place the backplate in position on the wall. Pull the wires through the wire opening.
4. Hold the backplate level and mark the mounting holes on the wall.
5. Drill the marked holes using a 5 mm (3/16 in.) drill bit.
6. Tap in the wall anchors and secure the base to the wall with the supplied screws.

NOTE: The thermostats are designed to also mount on a single gang junction box.

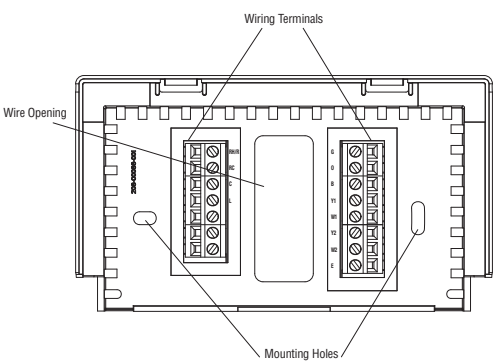

Providing Power to the Thermostat

To take advantage of the Pop-Up Wizard, power should be applied when the settings are ready to be entered. Fill in the chart in the **Pop-Up Wizard** section before applying power.

These thermostats will run on either two AA batteries or 24V AC. If the common wire from the transformer is not available, the unit must be powered by two AA batteries.

Thermostats with batteries and powered by 24V AC will continue to function if the 24V AC fails.

Maintaining the Batteries

When the batteries are low, the thermostat will enter a low power mode. Low battery mode has two levels.

- LEVEL 1: The low battery icon will be displayed.
- LEVEL 2: The low battery icon will flash indicating that THE SYSTEM WILL NOT OPERATE.

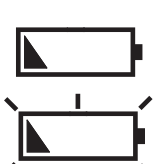

System Switch Selection

The body of the thermostat has two switches on the backside. They are accessible by removing the backplate from the body. The installer should set these to match the system.

If the thermostat is controlling a heat pump system, set the first switch to Heat Pump. Set the second switch based on the type of the backup heating system.

If the thermostat is controlling a non-heat pump system, set the first switch to Non-Heat Pump. The second switch must be set to match the system as Gas or Electric.

If Non-Heat Pump and Gas are selected, the heating system will control the fan.
If Non-Heat Pump and Electric are selected, the thermostat will control the fan.
If Heat Pump is selected, the thermostat will control the fan.

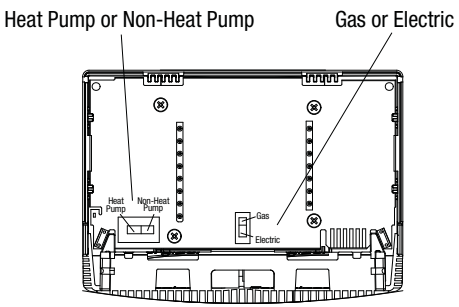

Connecting the Wires

1. The wire ends should be stripped back 8 mm (5/16 in.).
2. Use the Wiring Diagrams and secure the wires into the terminal strip. If replacing another thermostat, the wires should have been labeled. Match the labels to the terminals. Tighten the screws.
3. Pull lightly on each wire to ensure the connection is secure.

NOTE: Nightlight feature is only enabled when the RH/R and C terminals are connected.

Terminal Function

One Stage Models RS4110, RS5110 and RS6110

TERMINAL	EQUIPMENT TO CONNECT	DESCRIPTION
C	24V AC Common Connection	For input of 24V AC common side of transformer. Connect to 24V AC common side of the transformer for line power and nightlight feature.
RH/R	24V AC Hot Connection	Connect to 24V AC hot side of the transformer.
RC	24V AC Hot Connection	Connect to 24V AC hot side of the cooling transformer for two transformer systems. Note: Remove jumper to Rh when RC is connected.
Y1*	First stage compressor connection	Energizes on a call for first stage of cooling. Energizes on a call for first stage of heating when configured as a HP.
W1*	First stage heat connection	Energizes on a call for first stage of heating when configured as a Non-HP.
G	Indoor fan connection	Energizes with Y1 and Y2. Energizes with W1 and W2 if the Gas/Elec switch is set to electric. Energizes when fan is switched to ON.
O		Energizes for heat pump cool reversing valve.
B		Energizes for heat pump heat reversing valve.

* This thermostat can be used as a heat-only or cool-only thermostat. Therefore, it is not always necessary to use both W1 and Y1.

Two Stage Models RS4220, RS5220 and RS6220

TERMINAL	EQUIPMENT TO CONNECT	DESCRIPTION
L	24V AC Compressor Fault Output	Connect to fault signal for input from a compressor.
Y2	Second stage cooling connection.	Energizes on a call for second stage cooling (aux.).
W2	Second stage heat connection	Energizes on a call for second stage heating (aux.).
E	Emergency Heat Connection	Energizes on a call for emergency heat.

Three Stage Models RS4320 and RS6320

TERMINAL	EQUIPMENT TO CONNECT	DESCRIPTION
E	Third stage heat	Energizes on a call for 3rd stage heat

Wiring Diagrams

When used as
Heat Pump with Cool Active Reversing Valve With Battery

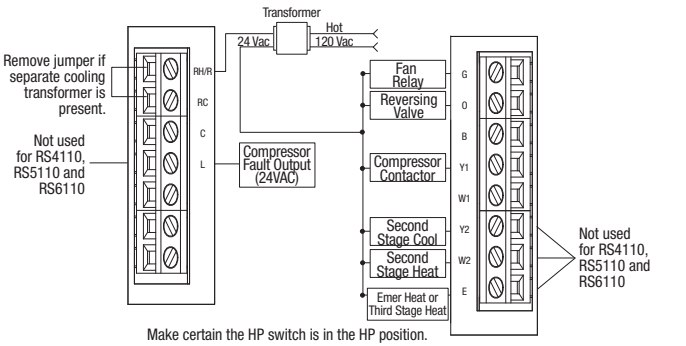

Make certain the HP switch is in the HP position.

When used as
Heat Pump with Heat Active Reversing Valve With Battery

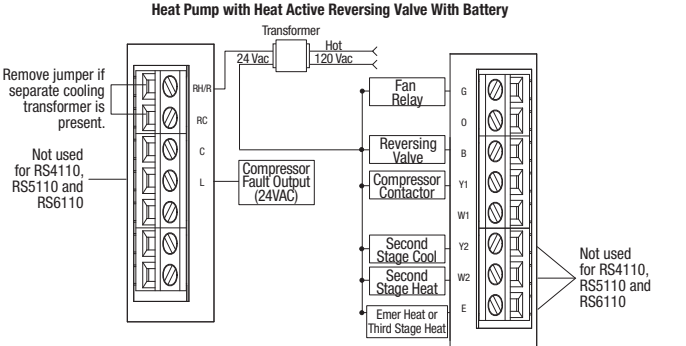

Make certain the HP switch is in the HP position.

When used as
Non-Heat Pump With Battery

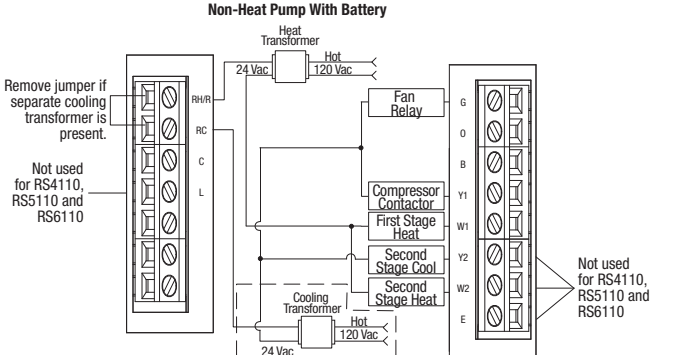

Cooling transformer is not required

Make certain the HP switch is in the Non-HP position.

Wiring Diagrams

When used as
Non-Heat Pump With Battery Backup

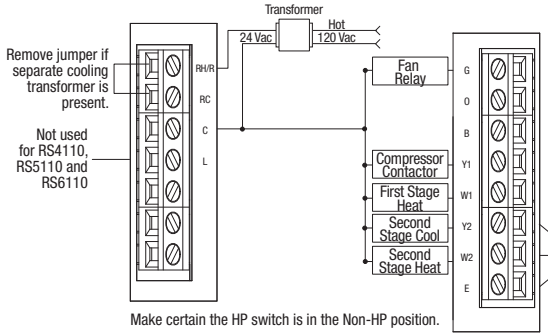

Make certain the HP switch is in the Non-HP position.

When used as
Heat Pump with Cool Active Reversing Valve With Battery Backup

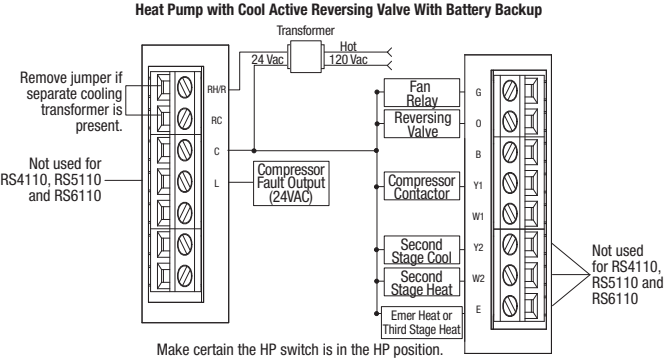

Make certain the HP switch is in the HP position.

When used as
Heat Pump with Heat Active Reversing Valve With Battery Backup

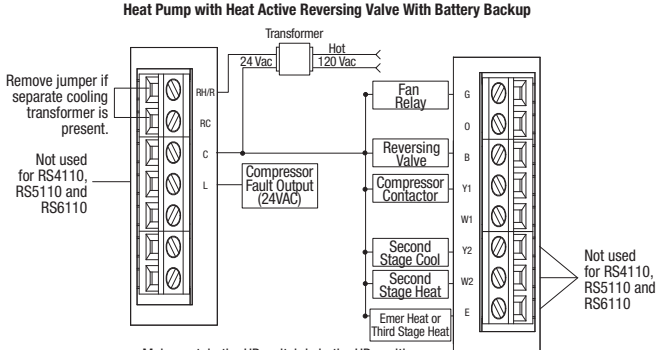

Make certain the HP switch is in the HP position.

Applying Power

Before applying power, fill in the chart in the Pop-Up Wizard section of this manual.

When 24V AC power or battery power is first applied to the thermostat, the display will show the model number followed by the Pop-Up Wizard. The thermostat will start normal operation following the Pop-Up Wizard.

Power is applied to the thermostat two ways:

1. Installing the batteries.
2. Not installing the batteries and connecting the thermostat body to a backplate that has the C terminal connected and 24V AC present.

NOTE: A thermostat powered by 24V AC will use the batteries as backup power if the 24V AC fails.

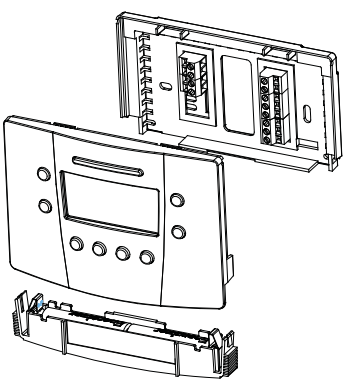

Installing Batteries

To remove the battery compartment gently squeeze the ribbed edges on both sides.

The battery compartment will pull down from the thermostat body and will detach. Install two AA batteries following the polarity as shown inside the compartment. Place compartment back into the thermostat.

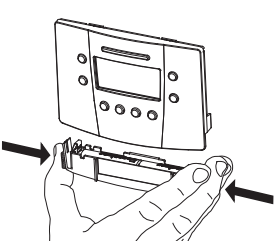

Connecting The Body

Attach the thermostat body to the backplate by holding it directly in front of the backplate. The edges will match and the wiring connections will make contact. Push the body in until it snaps in place.

Pop-Up Wizard

The Wizard routine will display factory default settings. Each setting will display for ten seconds. Use the ▲ or ▼ buttons to change the setting. Settings that are not changed will operate with the values that are displayed. To fast forward through the Wizard, press Edit Schedule. The Wizard can be exited by pressing Start/Stop Schedule. This will save the settings and place the thermostat into operation.

Use this chart to write down the desired settings before applying power. Settings may vary by model.

Displayed	Details	Default	Change To
SCAL	choose °F or °C	°F	_____
CLOC	choose 12 or 24 hour	12	_____
LITE	y = always on, n = off	y	_____
DIFF	differential, set between 0.5 to 3.0 °F or 0.5 to 1.5 °C	1 °F	_____
DIF2	2nd stage differential, added to first stage differential	2 °F	_____
DLY2	2nd stage delay, in minutes	20	_____
DLY3	3rd stage delay, in minutes	20	_____
AUTO	auto changeover enable	y	_____
DEDB	auto changeover deadband in degrees	3 °F	_____
HI	heat setting limit in degrees	90 °F	_____
LO	cool setting limit in degrees	45 °F	_____
VAC HEAT	vacation heat setpoint in degrees	62 °F	_____
VAC COOL	vacation cool setpoint in degrees	85 °F	_____
CHECK	check filter timer in hours	n or OFF	_____
CYCL	compressor short cycle delay in minutes	5	_____
CAL	calibration offset in degrees	0	_____

After the Wizard has configured the thermostat, the settings can be edited by pressing ▲ and ▼ simultaneously. This will allow you to change settings.

Factory settings that have not been changed will use the default settings for operation.

Default EnergyStar™ Settings for RS5000 and RS6000

The RS5000 and RS6000 series are programmable thermostats and are preprogrammed with a schedule that is recommended by EnergyStar™. The schedule is designed to lower energy costs year-round.

EnergyStar™ Temperature Settings		
	Winter (Heating)	Summer (Cooling)
Morning (6:00 am)	70 °F (21 °C)	78 °F (25 °C)
Day (8:00 am)	62 °F (17 °C)	85 °F (29 °C)
Evening (6:00 pm)	70 °F (21 °C)	78 °F (25 °C)
Night (10:00 pm)	62 °F (17 °C)	82 °F (28 °C)

Setting Time and Day for the RS5000 and RS6000 Series

To adjust the time and day settings press the SET TIME button. The hour will flash. To change the settings:

1. Use the ▲ and ▼ buttons to change the flashing number.
2. Press the SET TIME button to move through hours, minutes and days of week.
3. Make changes as needed. They will be saved automatically.

NOTE: The thermostat will not correct for Daylight Saving Time.

Installation Test Utility

⚠ WARNING: The installation test procedures can damage the heating/cooling equipment if used incorrectly. These procedures should only be performed by trained HVAC personnel.

The following instructions may be used to test the heating/cooling system for correct function.

To enter the test mode press and hold and for five seconds.

Short Cycle protection is disabled when using the test utility.

Push the ▲ and ▼ or Start/Stop schedule buttons at any time to exit test mode.

In the test mode:

Press to force the fan on or off.

Pressing repeatedly will allow testing of the system modes. See following tables. The display will show appropriate animated icons.

Press to step through the following:

Installation Tests for Single Stage Models				
	Conventional (Non-HP)		Heat Pump (HP)	
Demand	**Terminal**	**Display**	**Terminal**	**Display**
First Stage Heat	W1 + G*		Y1 + G	
First Stage Cool	Y1 + G		Y1 + G + O	
* G, will be off (not displayed) for Non-HP with Gas.				

Installation Tests for Multi-Stage Models				
	Conventional (Non-HP)		Heat Pump (HP)	
Demand	**Terminal**	**Display**	**Terminal**	**Display**
First Stage Heat	W1 + G*		Y1 + G + B	
Second Stage Heat	W1 + W2 + G*	2	Y1 + W2 +G + B	2
Third Stage / Emergency Heat	N/A		E + G	E
First Stage Cool	Y1 + G		Y1 + G + O	
Second Stage Cool	Y1 + Y2 + G	2	Y1 + Y2 + G + O	2
* G, will be off (not displayed) for Non-HP with Gas				

The display will now show the day, the setpoint, fan setting and off.

Exiting the Installation Test Utility returns the thermostat to normal operation.

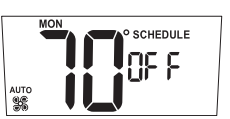

Refer to the User Manual to change day, time and schedule.

The Thermostat is now ready to begin operation.

The thermostat will be in the OFF (default) mode at start up.

The following sections will explain how to select the mode of operation and how to protect the settings.

Setting the Mode

Press the 🔥❄ button to cycle through the available modes.

Off	OFF
Heat	🔥
Cool	❄
Emergency Heat (Multi-Stage Heat Pump units)	E🔥
Auto changeover (if enabled)	🔥A❄

Setting Mode to Emergency Heat

The multi-stage thermostats have have an emergency heat capability for heat pump systems.

An E will be displayed with the heat symbol 🔥. Use emergency heat to turn off the heat pump and turn on a secondary heating source. This mode is used to bypass the heat pump when it needs servicing or when it cannot keep up with the heat demand.

Setting Mode to Auto Changeover

When auto changeover is active the letter A is displayed next to the 🔥 and ❄.

Changing from heat-to-cool or cool-to-heat is automatic. As the room temperature changes, the thermostat will call for heating or cooling as needed. The display will flash the heat 🔥 or cool ❄ symbol to show which system is active.

Note that the Hi/Low temperature limits are not enforced in auto changeover mode. Auto changeover mode can be disabled as a user option in the pop-up wizard.

Security Lockout to Protect the Settings

The buttons on the front of the thermostat can be locked with a password.

To create a password:

1. Press the ▲ and 🔥❄ buttons at the same time and hold them in for 5 seconds.
   You will be asked for a 4 digit password (the RS4000 series thermostats use 2 digits).
2. Each digit is set using the ▲ and ▼ buttons. Press the 🔥❄ to move to the next digit. Press 🌀 to move back.
3. The password is saved after 5 seconds.

All the front buttons are now locked out until the password is entered.

Pressing any button will cause 🔒 to flash.

To unlock the buttons:

1. Push and hold the ▲ and ❄ buttons for 5 seconds until the request for password is displayed.
2. Enter the digits for the password by pressing the ▲ and ▼ buttons. Press the ❄ to move to the next digit. Press ✿ to move back.
3. When the correct password is set, wait for 5 seconds to unlock the system.
4. If the wrong password is entered the display will flash -- for 5 seconds then return to normal.

Once the security has been disabled, a password needs to be re-created to protect the settings.

Thermostat Specifications

Operating Voltage	18-30V AC
Maximum Load Current	1 Amp Max per Output Terminal 4 Amp Total Load
Output Type	Latching Relays
Batteries	2 AA Alkaline in Series
Battery Life	2 Years Typical
Ambient Operating Temperature	14 °F (-10 °C) to 122 °F (50 °C)
Storage Temperature	-4 °F (-20 °C) to 140 °F (60 °C)

Operational Mode Chart:

Demand	Conventional (Non-HP)	Heat Pump (HP) Elec	Heat Pump (HP) Gas
First Stage Heat	W1 + G*	Y1 + G + B	Y1 + G + B
Second Stage Heat	W1 + W2 + G*	Y1 + Y2 + G + B or Y1 + W2 + G + B	Y1 + Y2 + G + B or Y1 + W2 + G + B
Third Stage Heat	N/A	Y1 + Y2 + E + G + B or Y1 + W2 + E + G + B	E + B
Emergency Heat	N/A	Y1 + G + O	Y1 + G + O
First Stage Cool	Y1 + G	Y1 + Y2 + G + O	Y1 + Y2 + G + O
Second Stage Cool	Y1 + Y2 + G	E + G	E
* G: G is off for Gas, on for Elec			

Troubleshooting

Problem	Action
Thermostat does not turn on system.	Check wiring (see **Wiring Diagrams** section).
System turns on too often.	Increase temperature differential (see **Pop-Up Wizard** section).
System fan does not operate properly.	Move fan option switch to either gas or electric, to match system (see **System Switch Selection** section).
Thermostat does not display proper room temperature.	Check F/C (Fahrenheit/Celsius) setting (see **Pop-Up Wizard** section).
Display shows HI or LO and room temperature is normal.	Call a licensed service person to replace thermostat.

If problems with thermostat cannot be resolved, contact:

www.robertshawclimate.com

or

Technical Support: (844) 362-4822
Monday-Friday 7:30 AM - 5:30 PM CST

Five Year Limited Warranty

Robertshaw Climate warrants to the original contractor installer, or to the original consumer user, each new Robertshaw thermostat to be free from defects in materials and workmanship under normal use and service for a period of five (5) years from date of purchase. This warranty and our liability does not apply to batteries or merchandise that has been damaged by misuse, neglect, mishandling, alterations, improper installation, or use in a way other than in accordance with Robertshaw Climate recommendations and instructions.

Robertshaw Climate agrees to repair or replace at its option any thermostat under warranty provided it is returned within the warranty period, postage prepaid, with proof of the date of purchase. Cost of thermostat removal or reinstallation is not the responsibility of Robertshaw Climate.

Repair or replacement as provided under this warranty is the exclusive remedy of the consumer. Robertshaw Climate shall not be liable for any incidental or consequential damages for breach of any express or implied warranty on this product, or under any other theory of liability. Except to the extent prohibited by applicable law, any implied warranty of merchantability or fitness for a particular purpose on this product is limited to the duration of this warranty.

Some states do not allow the exclusion or limitation of incidental or consequential damages, or allow limitations on how long an implied warranty lasts, so the above limitations or exclusions may not apply to you. This warranty gives you specific legal rights, and you may also have other rights which vary from state to state.

For warranty returns, send thermostat, shipping prepaid to:
Robertshaw Climate
Warranty Claims Department
PO Box 3161
Grapevine, TX 76099

Grapevine, TX 76051
United States of America
www.robertshawclimate.com
©2015 Robertshaw Climate
352-00060-001 Rev B