Rutherford

EQUIPMENT • QUALITY GAS PRODUCTS

14230 Lochridge Blvd. M-P
Covington, Georgia 30014
P: 800-241-5652
F: 770-929-1730

2577 Clark St.
Apopka, Florida 32703
P: 800-432-1869
F: 407-291-7237

303 Veterans Drive
Goldsboro NC 27530
P: 800-426-9293
F: 919-739-5894

Email: sales@rutherfordequipment.com • Web: www.rutherfordequipment.com

EQUIPMENT CATALOG 1900

Rutherford
EQUIPMENT • QUALITY GAS PRODUCTS

Your Partner In Growth Since 1960!

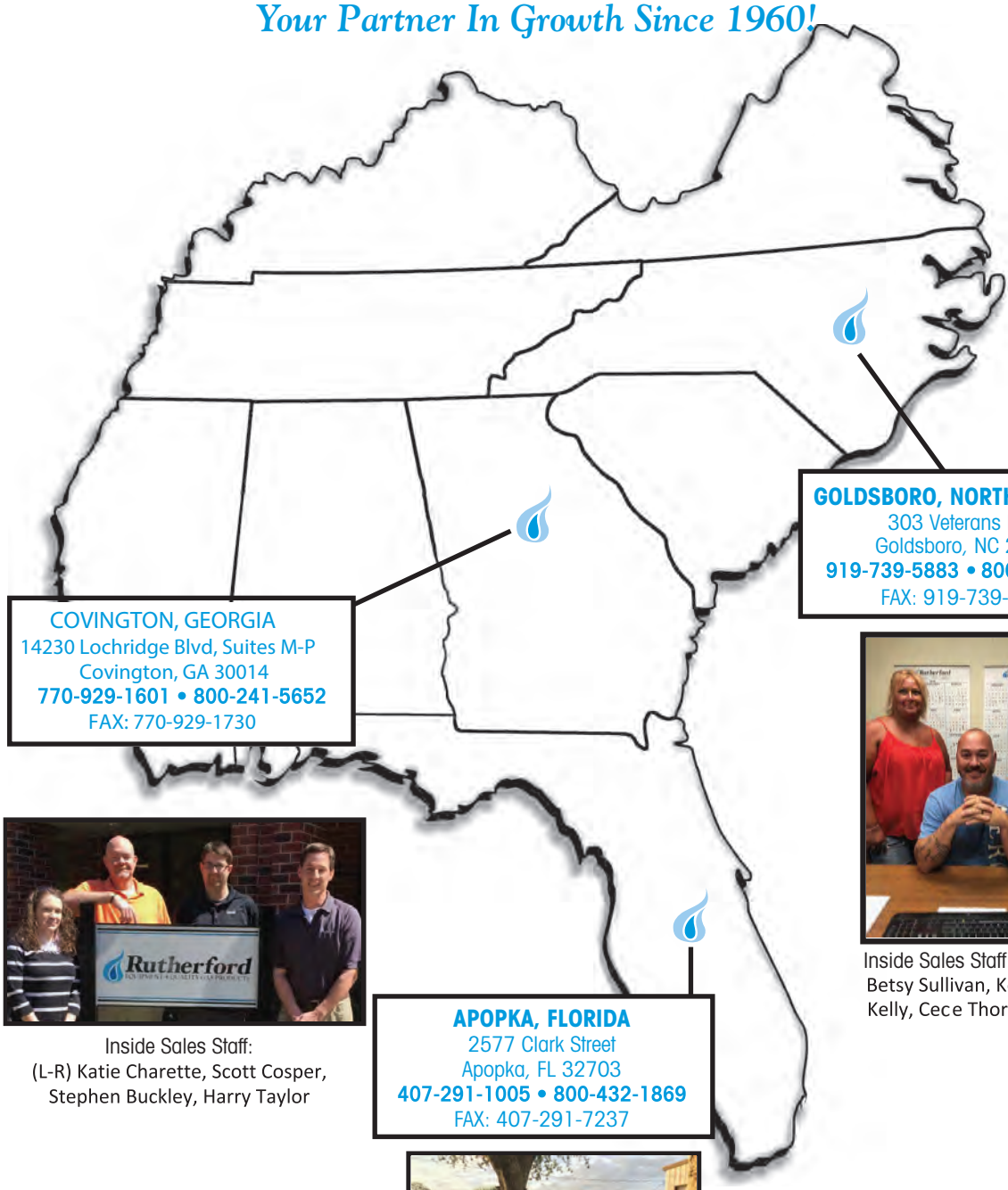

GOLDSBORO, NORTH CAROLINA
303 Veterans Drive
Goldsboro, NC 27530
919-739-5883 • 800-426-9293
FAX: 919-739-5894

COVINGTON, GEORGIA
14230 Lochridge Blvd, Suites M-P
Covington, GA 30014
770-929-1601 • 800-241-5652
FAX: 770-929-1730

APOPKA, FLORIDA
2577 Clark Street
Apopka, FL 32703
407-291-1005 • 800-432-1869
FAX: 407-291-7237

Inside Sales Staff:
(L-R) Katie Charette, Scott Cosper,
Stephen Buckley, Harry Taylor

Inside Sales Staff: (L-R)
Betsy Sullivan, Kenny
Kelly, Cece Thornton

Staff:
(L-R) Ernesto Rodriguez, Dawn Redmon,
Marty Garcia, Ricci Terrell, Johnnie Rodriguez

sales@rutherfordequipment.com **www.rutherfordequipment.com**

Rutherford
EQUIPMENT • QUALITY GAS PRODUCTS

OUR COMPANY

***SINCE 1960**, Rutherford Equipment has been supplying high quality parts and equipment to the propane industry in the southeast. We are a family owned business, staffed by highly motivated individuals who are dedicated to providing the propane industry with a complete selection of high quality equipment at competitive prices in a prompt and efficient manner.*

***WE ARE COMMITTED** to earning our customers' confidence by delivering courteous and competent service, supplying product updates and information, and providing training and technical support. We are sensitive to our customers' needs and dedicated to their satisfaction!*

OUR EQUIPMENT CATALOG

We have done our best to offer you a compact catalog that includes all of the propane parts and equipment we stock. If you would like a digital copy of this catalog, please let us know. Consumer products, i.e. grills, gas logs, etc. are not included in this catalog. Call us for a consumer product catalog. In some cases we include our part number and only a brief description of the item. ***For technical information, warnings, installation instructions, etc., please refer to the instructions that come with the item (if applicable). If you need additional information please contact us. We can provide manufacturer's catalogs upon request. You can also access the manufacturer's website for additional information.***

OUR WEBSITE

Online ordering, product information and account status are available via our website at www.rutherfordequipment.com. You can also check pricing and our current stock. Links to our manufacturers' websites are available. Check frequently for new products and specials!

We appreciate your business!

Randy Rutherford
Chairman

Rutherford
EQUIPMENT • QUALITY GAS PRODUCTS

Web: www.rutherfordequipment.com
e-mail: sales@rutherfordequipment.com

Our headquarters is based in Covington, GA:

Rutherford Equipment, Inc.
14230 Lochridge Blvd, Suites M-P, Covington, GA 30014
(P) 800-241-5652 • (F) 800-441-6589

Randy Rutherford, Chairman
rjr@rutherfordequipment.com

Georgia Operations Manager:
Scott Cosper
scott@rutherfordequipment.com

Inside Sales:

Stephen Buckley
stephen.buckley@rutherfordequipment.com

Harry Taylor
harry.taylor@rutherfordequipment.com

Katie Charette
kmc@rutherfordequipment.com

Amy Yarbrough
amy.yarbrough@rutherfordequipment.com

Mike Rutherford, President
mike@rutherfordequipment.com

Outside Sales:
Johnny Patrick - GA
johnny.patrick@rutherfordequipment.com
cell # 404-312-6035

Stephen Nichols - GA
(Consumer Products)
stephen.nichols@rutherfordequipment.com
cell # 706-201-7180

Ken Camp - AL, MS, FL Panhandle, TN
ken.camp@rutherfordequipment.com
cell# 662-414-1243

Other Personnel:
Randy Rutherford - Human Resources
rjr@rutherfordequipment.com

Vicky Worthy - Clerical
vicky.worthy@rutherfordequipment.com

Debbie Capell - Accounts Receivable
debbie.capell@rutherfordequipment.com

Linda Lanier - Inventory Control
linda.lanier@rutherfordequipment.com

Warehouse:
Ricky Thomas - Warehouse Manager
ricky.thomas@rutherfordequipment.com

Robbie Smith
Tim Greitman
Austin Cosper

Our Florida Location:

Rutherford Equipment, Inc.
2577 Clark St., Apopka, FL 32703
(P) 800-432-1869 • (F) 407-291-7237

Dawn Redmon, Florida Operations Manager
dawn.redmon@rutherfordequipment.com

Inside Sales:
Ricci Terrell
ricci.terrell@rutherfordequipment.com

Marty Garcia
marty.garcia@rutherfordequipment.com

Outside Sales:
Tate Greely - FL
(Consumer Products)
tate.greely@rutherfordequipment.com
cell # 813-442-4572

Rick Harris
rick.harris@rutherfordequipment.com
cell # 407-618-6829

Warehouse:
Ernesto Rodriguez

Johnnie Rodriguez

Our North Carolina Location:

Rutherford Equipment, Inc.
303 Veterans Drive, Goldsboro, NC 27530
(P) 800-426-9293 • (F) 919-739-5894

Kenny Kelly, NC Operations Manager
kk@rutherfordequipment.com

Inside Sales:
Cece Thornton
cece.thornton@rutherfordequipment.com

Betsy Sullivan
betsy.sullivan@rutherfordequipment.com

Outside Sales:
Charlie Brown - NC, SC
charlie.brown@rutherfordequipment.com
cell # 919-440-1870
voicemail # 800-435-2343 ext. 87

Nanci Harness - NC, SC
(Consumer Products)
nanci.harness@rutherfordequipment.com
cell # 813-512-0576

Warehouse:

Wells Edwards

William Parrish

TRAINING OPPORTUNITIES

Our representatives and our vendor reps are available to conduct training at your request. Here are some of the popular classes that we offer. Call today to schedule a training session!

Regulators; An overview of the components and features of the regulator. Pressure limitations, relief valves operation, lockup, problems and troubleshooting systems. Discuss proper installation of the regulator and its relationship with tank size and the piping system. 2-6 hours classroom.

Pipe Sizing; How to size typical piping systems and the use of the slide charts from the manufacturers and the different pipe sizing charts that are found in NFPA Pamphlet 54. Discuss how this relates to regulators as a system. 1-2 hours classroom.

Leak and Pressure Testing; an overview of the testing of piping systems as it relates to the requirements of NFPA Pamphlet 54, checking lockup, flow and the required testing for leaks in the piping system. 2 hours classroom.

Pumps and Pump Systems; an overview of the pumping system. Included are the components and the features of the pump and liquid meters. Pressure limitations, relief valves operation, problems and the proper way to troubleshoot systems. Proper installation and maintenance of the pump and its piping system. 7 hours classroom.

CETP; The CETP training and the proctoring of tests can be done with either paper versions or the electronic versions. For electronic versions, a computer and internet service would be required for each candidate. Classroom hours vary by course.

Counterstrike—CSST; An overview of Counterstrike CSST piping systems, pressure limitations and bonding. 2 hours classroom.

Perfection and PE Piping Systems and Components; an overview of the history of PE piping, from fusion to the Perfection mechanical fitting. Included are pressure limitations and proper installation. New Permasert 2.0 fittings and installation changes discussed. 2 hours classroom.

CSR Basics; A "Cliff note" version of CETP Basic Principles and Practices designed to give the CSR a basic understanding of propane and its characteristics, pressure and leak testing and what the serviceman encounters in the field. 1-2 hours classroom.

Gas Log and Gas Heater Basics; an overview of Gas logs and gas heaters. Included is information on valves and controls. Installation do's and dont's are also covered. 3 hours classroom.

Rutherford
EQUIPMENT • QUALITY GAS PRODUCTS

Georgia • 800-241-5652
Florida • 800-432-1869
North Carolina • 800-426-9293

CROSS REFERENCE GUIDE

MEC - Fisher - RegO®

The following guide is for your convenience and is general in nature.
Part numbers listed are the most commonly requested.
Please contact your local **Rutherford Equipment** office for specific details regarding the products we offer.

RegO	Fisher	MEC	Description
3176	G101	ME870-10	Back Pressure Check Valve, 1¼"
6016	N550-16	ME980C-16	2" ESV
7177	N201		Automatic Control Valve
7574	F131	ME880-12/95	Excess Flow Valve, 1½"
A7605B	N550-16	ME980C-16	2" ESV
1212KIT	50P-2	ME60P-2	Manometer Kit
1519A2	F130		Excess Flow Valve, 1"
1519A3	F131		Excess Flow Valve, 1½"
1519A4	F132		Excess Flow Valve, 2"
1519C2	F134		1 1/2" MNPT x 1" FNPT Excess Flow Valve
1519C4	F133		2" FNPT X 2"FNPT Excess Flow Valve
1584 Series	64 Series	MEGE164 Series	1/2" x 1/2" Adjustable High Pressure Regulator
2302-31	P100A		Regulator Bracket
302V	912-101	MEGR912/101	1/4" x 3/8" Compact Appliance Regulator
3127G	H110-250	MEV25/250	1/2" External Relief Valve for ASME & DOT
3127U	H124	MEH25/450	1/4" Hydrostatic Relief Valve, 450 psig
3131G	H185-250	MEV75/250	3/4" External Relief Valve for ASME & DOT
3179A/B	M570	ME571	1 3/4 ACME Filler Hose Adapter
3200C	P163A		Remote Cable Kit
3272E	F100	ME880-6/4.6	Excess Flow Valve, 3/4"
3272F	F101	ME880-6/14	Excess Flow Valve, 3/4"
3272G	F101	ME880-6/28	3/4"MNPT x 3/4"FNPT excess flow valve
3282A	F102	ME880-10/32	Excess Flow Valve, 1¼"
3282B	F102	ME880-10/42	Excess Flow Valve, 1¼"
3282C	F105		1 1/4"MNPT x 1 1/4"FNPT Excess Flow Valve
3292A	F106	ME880-16/80	Excess Flow Valve, 2"
3292B	F191	ME882S-16/105	2" MNPT x 2" FNPT Excess Flow Valve
597F series	67CH series	MEGR-6120/6121 Series	1/4" x 1/4" Adjustable High Pressure Regulator
6016-60C	P327D	ME551	ESV Pneumatic Actuator
7525B34	R962-31	MEGR175-BCF	1/4" Inv. Flare x 1/2" FNPT Automatic Changeover Regulator
7534G	H284-250	MEV200SIR250	2" Internal Relief Valve for Stationary Tanks
A1519A2	F134		1" FNPT X 1" FNPT Excess Flow Valve
A1519A3	F135		1 1/2"FNPT x 1 1/2" FNPT Excess Flow Valve
A1519B4	F133		2" FNPT x 2" FNPT Excess Flow Valve
A3146	G100	ME870-6	3/4" Back Check Valve
A3186	G112	ME870S-6	2" Steel Back Check Valve
A3187	G105	ME872S-16	2" Soft Seat Back Check Valve
A3187S	G105	ME870S-24	Back Pressure Check Valve, 2" Soft Seat
A3196	G104		3" Back Check Valve
A3196	G104		Back Pressure Check Valve, 3"
A3209D050	C407-10-05	ME990-10-55	1 1/4", 50 GPM Internal Valve
A3209D80	C407-10-80	ME990-10-85	1 1/4", 80 GPM Internal Valve
A3209PA	P389	ME205	Pneumatic Actuator for 1 1/4" Internal Valve
A3212R250	C477-1625	ME990-16-260	2" 250 GPM Internal Valve
A3213R series	C477-24 series	ME990-24 Series	3" Internal Valve
A3217AR series	C484 series	ME990S-3F Series	Single Flanged 3" Internal Valve
A3217DARseries	C483series	ME990S-3DF Series	Double Flanged 3" Internal Valve

CROSS REFERENCE GUIDE

MEC - Fisher - RegO®

The following guide is for your convenience and is general in nature.
Part numbers listed are the most commonly requested.
Please contact your local **Rutherford Equipment** office for specific details regarding the products we offer.

RegO	Fisher	MEC	Description
A3219FA Series	C404 Series	ME990-4F Series	Single Flanged 4" Internal Valve
A3219RT	P341	ME990-10-902	Remote Thermal Release
A3292B	F132		Excess Flow Valve, 2"
A3400L6	G104	ME870S-24	Back Pressure Check Valve, 3"
A7500 series	N300 Series	ME815/ME825 Series	Globe & Angle Valves
A7505AP	N301-06	ME825-6	3/4" Globe Valve
A7506AP	N401-06	ME815-6	3/4" Angle Valve
A7507AP	N301-08	ME825-8	1" Globe Valve
A7508AP	N401-08	ME815-8	1" Angle Valve
A7509BP	N310-10	ME825-10	1 1/4" Globe Valve
A7510BP	N410-10	ME815-10	1 1/4" Angle Valve
A7511AP	N310-12	ME825-12	1 1/2" Globe Valve
A7512BP	N410-12	ME815-12	1 1/2" Angle Valve
A7513AP	N310-16	ME825-16	2" Globe Valve
A7514BP	N410-16	ME815-16	2" Angle Valve
A7517AP	N310-24	ME825-24	3" Globe Valve
A7518AP	N410-24	ME815-24	3" Angle Valve
A7794	G201-16	ME981-16	2" Sight Flow Indicator
A7797A	N480		1" FPT X 1 3/4" FACME Hose End Valve
A8020D	J415	MEJ415	Liquid Level Valve
A8434 Series	H722 Series	MEV200FIR Series	2" Internal Relief Valve for Delivery Trucks
A8436 Series	H732 Series	MEV300FIR Series	3" Internal Relief Valve for Delivery Trucks
LV3403B4	R222-BAF	MEGR222-BAF	1/2" x 1/2" 2nd Stage Compact Regulator
LV3403TR	R122H-AAJ	MEGR122H-AAJ	1/4" x 1/2", Compact 1st Stage Regulator
LV404B4	R232A-BBF	MEGR232-BBF	1/4" x 1/2" Compact Integral 2 Stage Regulator
LV404B46	R632A-CFF	MEGR632-CFF	1/4" x 3/4" Integral 2 Stage Regulator
LV404B9	R632A-HCF	MEGR632-HCF	FPOL x 1/2" Compact Integral 2 Stage Regulator
LV404B96	R632A-JFF	MEGR632-JFF	FPOL x 3/4" Integral 2 Stage Regulator
LV404Y9	R232E-HBH	MEGR232-HBH	FPOL x 1/2"FPT 2 psi Compact Integral Regulator
LV4403B4	R622-BCF	MEGR622-BCF	1/2" x 1/2" 2nd Stage Regulator
LV4403B66	R622-DFF	MEGR622-DFF	1/2" x 3/4" 2nd Stage Regulator
LV4403B66R	R652-DFF	MEGR652-DFF	1/2" x 3/4" 2nd Stage Back Mount Regulator
LV4403B66RA	R622-DFF	MEGR622-DFF	3/4" x 3/4" 2nd Stage Angle Mount Regulator
LV4403SR4	R622H-BGK	MEGR622-BGK	1/2" x 1/2", 5 psig 1st Stage Regulator
LV4403SR9	R622H-HGK	MEGR622-HGK	FPOL x 1/2", 5 psig 1st Stage Regulator
LV4403SR96	R622H-JGK	MEGR622-JGK	FPOL x 3/4", 5 psig 1st Stage Regulator
LV4403TR4	R622H-BGJ	MEGR622-BGJ	1/2" x 1/2", 10 psig 1st Stage Regulator
LV4403TR9	R622H-HGJ	MEGR622-HGJ	FPOL x 1/2", 10 psig 1st Stage Regulator
LV4403TR96	R622H-JGJ	MEGR622-JGJ	FPOL x 3/4", 10 psig 1st Stage Regulator
LV4403Y4	R622E-BCH	MEGR622-BCH	1/2" x 1/2" 2 psig Regulator
LV5503B6	HSRL-BFC	MEGR-1HSRL-BFC	3/4" x 3/4" 2nd Stage Regulator
LV5503G4	R622-CFGXA		1/2" x 3/4" Tobacco Barn Regulator
LV5503Y6	R622E-DCH	MEGR622E-DCH	3/4" x 3/4" 2 psig Regulator
LV6503B14	CS400IR-8EC7	MEGR-S1202G-BNC	1 1/2" Large Capacity 2nd Stage Regulator
LV6503B16	CS400IR-8EC8	MEGR-S1202G-CNC	2" Large Capacity 2nd Stage Regulator

Notes

Use this section for personal notes, contacts, or to highlight frequently used pages in your Rutherford Equipment catalog.

TYPE R122H

TYPE R222H

TYPE R622H

Types R122H, R222H and R622H First-Stage Regulators are Underwriters Laboratories (UL®) listed regulators designed for Two-Stage LPG systems. These First-Stage regulators reduce tank pressure to a lower pressure (usually 10 psig / 0.69 bar) for a Second-Stage regulator. Maximum allowable inlet pressure is 250 psig / 17.2 bar. Fisher™ First-Stage regulators are painted red for easy identification. Vents are screened with standard orientation over the outlet. The Types R122H, R222H and R622H regulators have a temperature rating of -20 to 160°F / -29 to 71°C, but have passed Fisher internal testing for lockup, relief start-to-discharge and reseal down to -40°F / -40°C. The design's superior relief performance exceeds UL requirements and provides double failure overpressure protection (pressure downstream of the second regulator will be limited close to 2 psig / 0.14 bar, even if both regulators are damaged) when used with R600 Series Second-Stage regulator. Corrosion and wear resistant materials and stainless steel internal parts provide a recommended replacement life of 20 years. A large fabric reinforced diaphragm with molded lips provide precise regulation. The large precision machined orifice assists in minimizing freeze problems. 1/8 in. inlet and outlet gauge taps allow easy system testing. Large inlet and outlet wrench flats for easy installation. The unit's Fluorocarbon (FKM) valve disc provides better lockup performance and durability in contaminated gas. The vent is with 3/8 in. NPT for easy installation of vent piping.

Type R122H – Designed for use in domestic applications, the Type R122H's size makes it perfect for tight installations. Its non-adjustable setpoint makes the unit virtually tamper proof. The outlet pressure setpoint remains at a nominal factory setting of 10 psig / 0.69 bar.

Type R222H – First stage regulator with all Type R622H benefits stated above, but with a compact profile. 65% greater flow than typical compact regulators but with a 40% smaller footprint. It is perfect for underground tanks or limited dome spaces.

Type R622H – High Flow First-Stage regulator with multiple end connections and adjustable outlet pressure spring ranges. A large 3/4 in. FNPT drip-lip vent reduces the chance of blockage by freezing rain or sleet when properly installed with the vent pointing down. Each Type R622H is equipped with a corrosion-resistant internal relief valve that provides high capacity relief and a travel stop on the closing cap. Its size and configuration make it ideal for under-the-dome installations.

First-Stage Regulators

TYPE	CAPACITIES (PROPANE)[1][3]		INLET CONNECTION, IN.	OUTLET CONNECTION, IN.	OUTLET ADJUSTMENT RANGE		OUTLET PRESSURE SETTING		NOMINAL RELIEF VALVE START-TO-DISCHARGE	
	BTU / hr	SCMH			psig	bar	psig	bar	psig	bar
R122H-AAJ	1,100,000	12.4	1/4 FNPT	1/2 FNPT	Non-Adjustable		10	0.69	----	----
R122H-AAJXB[2]										
R222H-BGK	1,700,000	19.1	1/2 FNPT	1/2 FNPT	4 to 6	0.28 to 0.41	5	0.34	9	0.62
R222H-BGJ	1,800,000	20.2			8 to 12	0.55 to 0.82	10	0.69	16	1.10
R222H-HGK	1,700,000	19.1	FPOL	1/2 FNPT	4 to 6	0.28 to 0.41	5	0.34	9	0.62
R222H-HGJ	1,800,000	20.2			8 to 12	0.55 to 0.82	10	0.69	16	1.10
R222H-JGK	1,875,000	21.1	FPOL	3/4 FNPT	4 to 6	0.28 to 0.41	5	0.34	9	0.62
R222H-JGJ	1,875,000	21.1			8 to 12	0.55 to 0.82	10	0.69	16	1.10
R222H-DGK	2,000,000	22.5	3/4 FNPT	3/4 FNPT	4 to 6	0.28 to 0.41	5	0.34	9	0.62
R222H-DGJ	2,000,000	22.5			8 to 12	0.55 to 0.82	10	0.69	16	1.10
R622H-BGK	2,000,000	22.5	1/2 FNPT	1/2 FNPT	4 to 6	0.28 to 0.41	5	0.34	----	----
R622H-HGK			FPOL							
R622H-JGK	2,250,000	25.3	FPOL	3/4 FNPT						
R622H-BGJ	2,100,000	23.6	1/2 FNPT	1/2 FNPT	8 to 12	0.55 to 0.83	10	0.69	----	----
R622H-DGJ	2,400,000	27.0	3/4 FNPT	3/4 FNPT						
R622H-HGJ	2,100,000	23.6	FPOL	1/2 FNPT						
R622H-JGJ	2,250,000	25.3		3/4 FNPT						

1. Based on 30 psig / 2.1 bar inlet pressure and 20% droop.
2. Vent over gauge taps.
3. Metric conversion is based on 2516 BTU/ft³ of gas at 60°F / 16°C.

Types R222, R622, R642, R652 and HSRL Second-Stage regulators are Underwriters Laboratories (UL®) listed regulators designed to reduce the outlet pressure from a First-Stage regulator, usually 10 psig / 0.69 bar to 11 in. w.c. / 27 mbar, in domestic installations. Vents are screened with standard orientation over the inlet, but other orientations are available. Fisher™ Second-Stage regulators are painted palm green for easy identification. Types R222, R622, R642 and R652 are equipped with a stainless steel inlet screen to reduce the amount of debris entering the regulator and have a temperature rating of -20 to 160°F / -29 to 71°C, but have passed Fisher internal testing for lockup, relief start-to-discharge and reseal down to -40°F / -40°C.

Type R222 is designed for small domestic applications up to 650,000 BTU per hour / 7.3 SCMH. The unit provides the same features as the Type R622 in a smaller package and its design provides a recommended replacement life of 20 years.

Type R622 is designed for Two-Stage domestic applications up to 1,400,000 BTU per hour / 15.8 SCMH. The Type R622's time proven design and corrosion resistant materials, provide a recommended replacement life of 20 years.

Type R622 contains a high performance relief valve and a large 3/4 in. screened vent to limit downstream pressure to less than 2 psig / 0.14 bar in an overpressure situation as required by NFPA 58. The relief valve design exceeds the industry standard by limiting the downstream pressure to 2 psig / 0.14 bar even in a double failure situation when used with a Type R622H or R122H First-Stage regulator. The Type R622 is adjustable from 9 to 20 in. w.c. / 22 to 50 mbar.

For easy system checks, the Type R622 has 1/8 in. NPT built-in gauge taps orificed to a No. 54 drill size, on both the upstream and downstream sides. This regulator also features a large 3/4 in. drip-lip vent design.

Types R642 and R652 are designed for domestic applications up to 920,000 / 10.4 and 1,000,000 BTU per hour / 11.3 SCMH, respectively. These units provide all the same features as the Type R622, including the 20-year recommended replacement life and double failure protection, in an angle body for the Type R642 and backmounted design for the Type R652.

Type HSRL is an UL listed regulator designed for light commercial applications up to 2,600,000 BTU per hour / 29.3 SCMH. It utilizes a high strength cast iron body and a 3/4 in. NPT drip lip vent design. The PFC and SFC feature an angle-body design. The design also includes a high capacity internal relief valve and a 20-year recommended replacement life.

Second-Stage Regulators

TYPE	CAPACITIES (PROPANE)[1]		INLET CONNECTION, IN.	OUTLET CONNECTION, IN.	OUTLET PRESSURE RANGE		OUTLET PRESSURE SETTING	
	BTU / hr	SCMH			In. w.c.	mbar	In. w.c.	mbar
R222-BAF[2]	650,000	7.3	1/2 FNPT	1/2 FNPT	9.5 to 13	24 to 32	11	27
R622-BCF[3]	875,000	9.8	1/2 FNPT	1/2 FNPT	9 to 13	22 to 32		
R622-CFF[2][4]	1,400,000	15.8	1/2 FNPT	3/4 FNPT				
R622-DFF[5]			3/4 FNPT					
R642-DFF[2]	920,000	10.4						
R652-CFF	1,000,000	11.3	1/2 FNPT					
R652-DFF			3/4 FNPT					
R622-CFGXA[3]	1,125,000	12.7	1/2 FNPT	3/4 FNPT	13 to 20	32 to 50	18	45
HSRL-BFC	2,300,000	25.9	3/4 FNPT	3/4 FNPT	9 to 13	22 to 32	11	27
HSRL-PFC								
HSRL-CFC	2,600,000	29.3	1 FNPT	1 FNPT				
HSRL-SFC								

1. Based on 10 psig / 0.69 bar inlet pressure and 2 in. w.c. / 5 mbar droop.
2. Consult factory for alternate vent over outlet position as "XA" option
3. Vent over Inlet as standard
4. Consult factory for alternate vent opposite gauge taps as "XB" option
5. Consult factory for alternate vent over outlet position as "XB" option

TYPE R622E

TYPE R652E

Types R622E and R652E, Two-psi Service Regulators, are designed for Two-psi LPG Regulator Systems and listed by Underwriters Laboratories (UL®). These units are installed downstream from a First-Stage regulator and reduce an inlet pressure of 10 psig / 0.69 bar to a nominal 2 psig / 0.14 bar outlet pressure. Two-psi Service Regulators are designed for domestic applications that supply 2 psig / 0.14 bar LPG to a line regulator located inside the building. In most cases a manifold is used with corrugated stainless steel tubing (CSST) as well as other acceptable piping materials for routing to the line pressure regulator supplying approximately 11 in. w.c. / 27 mbar to appliance regulators.

Types R622E and R652E, Two-psi Service Regulators feature a combination relief valve and large vent that provide overpressure protection and exceed UL requirements. Both units have a stainless steel inlet screen to reduce the amount of debris from entering them. Fisher™ Types R622E and R652E are painted green with a white closing cap for easy identification and have a temperature rating of -20 to 160°F / -29 to 71°C, but have passed Fisher internal testing for lockup, relief start-to-discharge and reseal down to -40°F / -40°C.

Type R622E – Time proven design constructed of corrosion resistant materials, the Type R622E is designed to provide a recommended replacement life of 20 years. Fisher regulator's fabric-reinforced diaphragm and large diaphragm area provide accurate regulation at increased capacities. All components provide superior resistance to field conditions that may cause wear and corrosion. Built-in 1/8 in. taps (orificed to a number 54-drill size) on the upstream and downstream sides allow for easy gas system checks.

Type R652E – Provides the same features as the Type R622E, includes a 20-year recommended replacement life with a back mount design.

Typical Two-psi Installation

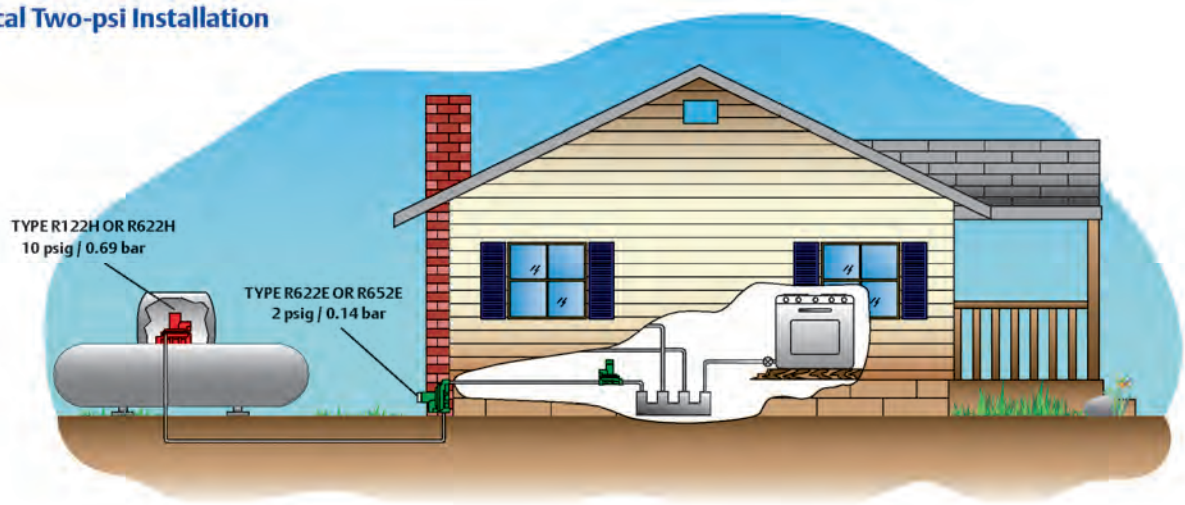

Two-psi Service Regulators

TYPE	CAPACITIES (PROPANE)[1]		CONNECTION INLET X OUTLET, IN.	OUTLET PRESSURE RANGE		OUTLET PRESSURE SETTING	
	BTU / hr	SCMH		psig	bar	psig	bar
R622E-BCH	1,460,000	16.4	1/2 x 1/2 FNPT	1 to 2.2	69 mbar to 0.15	2	0.14
R622E-DCH	1,680,000	18.9	3/4 x 3/4 FNPT				
R652E-DFH	1,500,000	16.9					

1. Based on 10 psig / 0.69 bar inlet pressure and 20% droop.

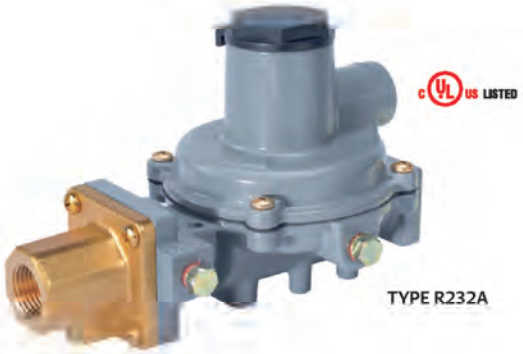

TYPE R232A

TYPE R632A

Integral Two-Stage regulators combine a First-Stage regulator and a Second-Stage regulator into one compact unit. Recommended for installations where piping distance is short, integral Two-Stage regulators provide all of the advantages of Two-Stage regulation (refer to page 24). Fisher™ integral Two-Stage regulators are color coded gray for easy identification. Vents are screened with standard Second-Stage vent orientation over the outlet. The Types R632A and R232A first-stage screened vent is threaded to accept a 1/4 in. OD copper tube inverted flare with a 7/16-24 UN thread. The Types R232A and R632A have a temperature rating of -20 to 160°F / -29 to 71°C, but have passed Fisher internal testing for lockup, relief start-to-discharge and reseal down to -40°F / -40°C.

Type R632A – is an Underwriters Laboratories (UL®) listed regulator with a capacity of up to 950,000 BTU per hour / 10.7 SCMH, recommended for on-site cylinder installations, mobile homes and domestic installations, where separation of the First and Second-Stage is not cost effective. This unit offers a POL inlet connection for the easy drop-in replacement of Single-Stage regulators.

Type R632A's high capacity relief valve and large 3/4 in. screened vent limit downstream pressure to less than 2 psig / 0.14 bar in an overpressure situation as required by NFPA 58. Type R632A is adjustable from 9 to 13 in. w.c. / 22 to 32 mbar, with a factory setpoint of 11 in. w.c. / 27 mbar. The Type R632A features include the 20-year recommended replacement life.

Type R632A has 1/8 in. NPT built-in gauge taps orificed to a No. 54 drill size, on the upstream and downstream sides. These taps provide easy access for testing the proper operation of the First and Second-Stage while the system is pressurized. This regulator also features a large 3/4 in. drip-lip vent to reduce the chance of blockage by freezing rain or sleet when properly installed with the vent pointing down.

Type R232A – Designed for installations with small capacity loads up to 550,000 BTU per hour / 6.2 SCMH. With an overall length of 6.5 or 7 in. / 165 or 178 mm for NPT or FPOL connections respectively, this compact unit fits easily into confined spaces and is ideal for ASME tanks used on small domestic loads. Intermediate and outlet gauge taps facilitate easy system testing. A 3/8 in. NPT vent allows easy installation of vent piping. Use of a valve stem and lever provide stable regulation and excellent durability. A large fabric-reinforced diaphragm provides accurate regulation. The large orifice assists in minimizing freeze problems. Stainless steel internal and corrosion resistant coatings provide excellent corrosion resistance. The Type R232A also has the design that provides a recommended replacement life of 20 years.

Twin Cylinder Installations – The Type R232A can also be used on twin cylinder hook-ups found on travel trailers and stationary applications. These units offer a drip-lip vent style for installations without a vent protector. Proper installation requires the vent to be pointed down in a vertical position. Additional protection may be required if road splatter is a problem.

Integral Two-Stage Regulators

TYPE NUMBER	CAPACITIES (PROPANE)[1]		INLET CONNECTION, IN.	OUTLET CONNECTION, IN.	OUTLET ADJUSTMENT RANGE		OUTLET PRESSURE SETTING	
	BTU / hr	SCMH			In. w.c.	mbar	In. w.c.	mbar
R232A-BBF	550,000	6.2	1/4 FNPT	1/2 FNPT	10.2 to 13	25 to 32	11	27
R232A-BBFXA[2]								
R232A-HBF			FPOL					
R232A-HBFXA[2]								
R632A-BCF	850,000	9.6	1/4 FNPT	1/2 FNPT	9 to 13	22 to 32		
R632A-BCFXA[2]								
R632A-CFF	950,000	10.7		3/4 FNPT				
R632A-CFFXA[2]								
R632A-HCF	850,000	9.6	FPOL	1/2 FNPT				
R632A-HCFXA[2]								
R632A-JFF	850,000	9.6		3/4 FNPT				
R632A-JFFXA[2]								

1. Based on 30 psig / 2.1 bar inlet pressure and 2 in. w.c. / 5 mbar droop.
2. First and Second-Stage spring case vents opposite gauge taps.

TYPE R232E

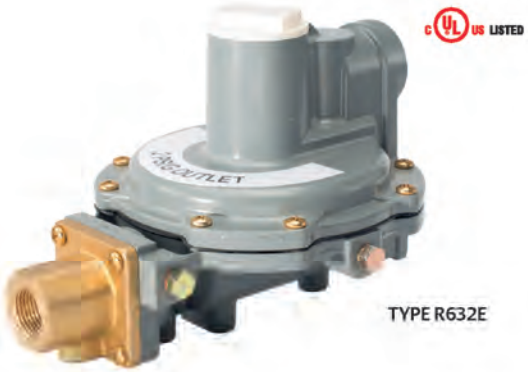

TYPE R632E

Integral Two-psi regulators combine a First-Stage regulator and a Second-Stage, Two-psi regulator into one compact unit. Recommended for installations where piping distance is short, integral Two-Stage, Two-psi regulators provide all of the advantages of Two-Stage regulation (refer to page 23). Fisher™ integral Two-Stage, Two-psi regulators are color coded gray with a white cap and white UV rated cover for easy identification. Vents are screened with standard Second-Stage vent orientation over the outlet. The Types R632E and R232E first-stage screened vent is threaded to accept a 1/4 in. OD copper tube inverted flare with a 7/16-24 UN thread. The Types R23E and R632E have a temperature rating of -20 to 160°F / -29 to 71°C, but have passed Fisher internal testing for lockup, relief start-to-discharge and reseal down to -40°F / -40°C.

Type R632E – is an Underwriters Laboratories (UL®) listed regulator with a capacity of up to 810,000 BTU per hour / 9.1 SCMH, recommended for on-site cylinder installations, mobile homes and domestic installations, where separation of the First and Second-Stage is not cost effective. This unit offers a POL inlet connection for the easy drop-in replacement of Single-Stage regulators.

Type R632E's high capacity relief valve and large 3/4 in. screened vent limit downstream pressure to less than 5 psig / 0.34 bar in an overpressure situation as required by NFPA 58. Type R632E is adjustable from 1 to 2.2 psig / 69 to 152 mbar, with a factory setpoint of 11 in. w.c. / 27 mbar. The Type R632E features a 20-year recommended replacement life.

Type R632E has 1/8 in. NPT built-in gauge taps orificed to a No. 54 drill size, on the upstream and downstream sides. These taps provide easy access for testing the proper operation pressure of the First and Second-Stage while the system is pressurized. This regulator also features a large 3/4 in. drip-lip vent to reduce the chance of blockage by freezing rain or sleet when properly installed with the vent pointing down.

Type R232E – Designed for installations with small capacity loads up to 450,000 BTU per hour / 5.1 SCMH. With an overall length of 6.5 or 7 in. / 165 or 178 mm for NPT or FPOL connections respectively, this compact unit fits easily into confined spaces and is ideal for ASME tanks used on small domestic loads. Intermediate and outlet gauge taps facilitate easy system testing. A 3/8 in. NPT vent allows easy installation of vent piping. Use of a valve stem and lever provide stable regulation and excellent durability. A large fabric-reinforced diaphragm provides accurate regulation. The large orifice assists in minimizing freeze problems. Stainless steel internal and corrosion resistant coatings provide excellent corrosion resistance. The Type R232E also has the design that provides a recommended replacement life of 20 years.

Twin Cylinder Installations – The Type R232E can also be used on twin cylinder hook-ups found on travel trailers and stationary applications. These units offer a drip-lip vent style for installations without a vent protector. Proper installation requires the vent to be pointed down in a vertical position. Additional protection may be required if road splatter is a problem.

Integral Two-psi Regulators

TYPE	CAPACITIES (PROPANE)[1]		INLET CONNECTION, IN.	OUTLET CONNECTION, IN.	OUTLET ADJUSTMENT RANGE		OUTLET PRESSURE SETTING	
	BTU / hr	SCMH			psig	mbar	psig	mbar
R232E-BBH	500,000	5.6	1/4 FNPT	1/2 FNPT	1 to 2.2	69 to 152	2	138
R232E-BBHXA[2]								
R232E-HBH			FPOL					
R232E-HBHXA[2]								
R632E-BCH	850,000	9.6	1/4 FNPT	1/2 FNPT	1 to 2.2	69 to 152		
R632E-BCHXA[2]								
R632E-CFH	850,000	9.6		3/4 FNPT				
R632E-CFHXA[2]								
R632E-HCH	900,000	10.1	FPOL	1/2 FNPT				
R632E-HCHXA[2]								
R632E-JFH	850,000	9.6		3/4 FNPT				
R632E-JFHXA[2]								

1. Based on 30 psig / 2.1 bar inlet pressure and 20% droop.
2. First and Second-Stage spring case vents opposite gauge taps.

TYPE 67CW TYPE 67CH TYPE 67CH-747 TYPE 67CD TYPE 67CN

67C Series

Suitable for liquid or vapor service, the 67C Series high-pressure (pounds-to-pounds) regulators are used on a variety of applications. All types within the series have a 1/4 in. FNPT side outlet in which a pressure gauge (J500 Series) can be installed. The compact size of the 67C Series regulators make them particularly useful on installations where space is limited. The regulator design utilizes precise guiding of the valve plug to provide close regulation and high performance. The LPG 67C Series has a temperature rating of -20 to 180°F / -29 to 82°C.

Type 67CW – Standard regulator with wrench adjustment.

Type 67CH – Standard regulator with handwheel adjustment. Also available with 1/4 in. NPT threaded exhaust port, Type 67CH-747[2].

Type 67CD – With dial calibration accuracy nearly equivalent to that of a commercial pressure gauge, the Type 67CD eliminates the need for a pressure gauge on portable applications.

Outlet pressure is calibrated on the spring case allowing visual adjustment of the outlet pressure without having to use a pressure gauge. The unit is ideal for service where gauge breakage is a problem.

Type 67CN – Extremely compact unit with a fixed (non-adjustable) outlet setting and a tamper resistant spring case. Three different setpoints are available: 10, 15 and 20 psig / 0.69, 1.0 and 1.4 bar.

Note: 67C Series regulators do not have an internal relief and should be installed with additional/external overpressure protection. These units should not be installed in fixed piping serving 14 in. w.c. / 35 mbar appliance systems. Please consult with your LPG Equipment Distributor for more information.

High-Pressure Regulators

TYPE	DESCRIPTION	CAPACITIES (PROPANE)[1]		OUTLET PRESSURE SETTING		OUTLET ADJUSTMENT RANGE		INLET AND OUTLET CONNECTIONS, IN.
		BTU / hr	SCMH	psig	bar	psig	bar	
67CW-683	Basic Regulator (Wrench Adjustment)	675,000	7.6	15	1.0	3 to 20	0.21 to 1.4	1/4 FNPT
67CW-684		750,000	8.4	20	1.4	3 to 35	0.21 to 2.4	
67CW-685		1,200,000	13.5	40	2.8	30 to 60	2.1 to 4.1	
67CW-701		1,000,000	11.3	50	3.4	50 to 120	3.4 to 8.3	
67CH-751	Basic Regulator (Handwheel Adjustment)	675,000	7.6	15	1.0	3 to 20	0.21 to 1.4	
67CH-743		750,000	8.4	20	1.4	3 to 35	0.21 to 2.4	
67CH-742		1,200,000	13.5	40	2.8	30 to 60	2.1 to 4.1	
67CH-741		1,000,000	11.3	50	3.4	50 to 120	3.4 to 8.3	
67CH-745	Basic Regulator (Handwheel Adjustment) with Type M318 installed	750,000	8.4	20	1.4	3 to 35	0.21 to 2.4	
67CH-747[2]	Basic Regulator (Handwheel Adjustment with 1/4 in. NPT Exhaust Vent)	750,000	8.4	20	1.4	3 to 35	0.21 to 2.4	
67CD-100	Dial Cap Adjustment	675,000	7.6	15	1.0	5 to 20	0.34 to 1.4	
67CD-102		1,200,000	13.5	40	2.8	20 to 50	1.4 to 3.4	
67CD-103		1,000,000	11.3	50	3.4	40 to 100	2.8 to 6.9	
67CN-106	Non-Adjustable	400,000	4.5	10	0.69	Non-Adjustable		
67CN-104		600,000	6.7	15	1.0	Non-Adjustable		
67CN-105		750,000	8.4	20	1.4	Non-Adjustable		

1. Based on inlet pressure 20 psig / 1.4 bar greater than outlet with 20% droop; Liquid capacity = 3 to 5 GPH / 11.4 to 18.9 l/hr.
2. Per CSA B149.1, section 5.5.1

64 SERIES

64 Series

High-pressure (pounds-to-pounds) regulators usually reduce tank pressure to an intermediate pressure for use by another regulator. They may be used as high-pressure regulators on distribution systems when used in conjunction with a First-Stage downstream regulator. The Type 64SR may be used for First-Stage when set at 10 psig / 0.69 bar. They are also used for Final-Stage service on high-pressure burners in crop dryers and tobacco curers, as well as other medium sized commercial/industrial applications.

The 1/4 in. FNPT side outlet, which is normally plugged, provides an opening for an outlet pressure gauge. Standard 64's Series are capable of handling liquid or vapor at temperatures under 150°F / 66°C. A cover or auxiliary vent assembly should be used to protect the 1/4 in. FNPT regulator vent opening on outdoor installations. Temperature rating for the 64 and 64SR Series has a temperature rating from -20 to 150°F / -29 to 66°C.

64 Series – is an adjustable high-pressure regulator with a wide range of available outlet pressure ranges. It does not contain a relief valve. It should always be used in conjunction with a downstream regulator and/or separate relief devices in compliance with NFPA 58 overpressure protection requirements.

Type 64SR – is a high-pressure regulator, which has an internal relief valve. As such it may be used as a Final-Stage regulator on high-pressure systems. It may also be used as a First-Stage regulator when set at 10 psig / 0.69 bar or less.

Note: 64 Series regulators do not have an internal relief and should be installed with additional/external overpressure protection. These units should not be installed in fixed piping serving 14 in. w.c. / 35 mbar appliance systems. Please consult with your LPG Equipment Distributor for more information.

Note: If the installation location makes the ignition of vented gas a possibility, then a vent line should be installed from the Type 64SR vent to a safe location.

High-Pressure Regulators

TYPE	DESCRIPTION	CAPACITIES (PROPANE)[1]		OUTLET PRESSURE SETTING		OUTLET ADJUSTMENT RANGE		INLET AND OUTLET CONNECTIONS, in.
		BTU / hr	SCMH	psig	bar	psig	bar	
64-33	Basic Regulator	2,625,000	29.6	10	0.69	3 to 15	0.21 to 1.0	1/2 FNPT
64-35		3,600,000	40.5	20	1.4	5 to 35	0.34 to 2.4	
64-36		4,150,000	46.7	40	2.8	30 to 60	2.1 to 4.1	
64-222		5,250,000	59.1	50	3.4	35 to 100	2.4 to 6.9	
64SR-21	With Internal Relief Valve	2,625,000	29.6	10	0.69	3 to 15	0.21 to 1.0	
64SR-22		3,000,000	33.8	15	1.0	5 to 20	0.34 to 1.4	
64SR-23		3,600,000	40.5	20	1.4	5 to 35	0.34 to 2.4	

1. Based on inlet pressure 20 psig / 1.4 bar greater than outlet with 20% droop; Liquid capacity = 160 GPH / 606 l/hr.

TYPE 627 DIRECT-OPERATED REGULATOR

TYPE 630 DIRECT-OPERATED REGULATOR

For Commercial and Industrial high-pressure applications like factories, office building, restaurants, etc., Emerson has a wide variety of products. For ease of reference, only the most popular commercial and industrial regulators are shown in these pages. Other orifice sizes, body sizes and outlet pressure ranges are available. The higher capacities on commercial and industrial installations usually require a Two-Stage regulator system.

Note: Because of various spring ranges and orifice sizes, all commercial and industrial regulators should be individually sized for the particular installation. Consult specific product bulletins for maximum pressure ratings. Contact your local LPG Equipment Distributor for assistance.

Types 627 and 630 – Large capacity direct-operated high-pressure regulators designed for loads up to 10,700,000 and 14,000,000 BTU per hour / 120 and 157 SCMH, respectively. The Types 627 and 630 are normally used in conjunction with Type CS400 units, however, they can also be used on Final-Stage (pounds-to-pounds) service. Additional overpressure protection is recommended to prevent excessive build-up in the downstream line. The diaphragm case and body of the Type 627 can be rotated in four positions to allow easy installation. Additional configurations of the Type 627 with internal relief and control line connections for monitor systems are available. For both the Types 627 and 630, additional pressure ranges and orifice sizes are available. Temperature ratings for the Types 627 and 630 is -20 to 160°F / -29 to 71°C.

For Liquid Service, Types 627W and MR95H are available.

Note: Types 627 and 630 regulators do not have an internal relief and should be installed with additional/external overpressure protection. These units should not be installed as part of a two-stage system in fixed piping serving 14 in. w.c. / 35 mbar appliance systems unless additional overpressure protection is installed that will make the system compliant with NFPA 58 requirements for a two-stage system. Please consult with your LPG Equipment Distributor for more information.

Flanged Bodies – The Types 630 and 627 are available with flanged bodies. Flanges are available for 2 in. CL300 FF.

Overpressure Protection – The Type 627 is also available in monitor configurations. Note that the Type 627 monitor regulators have unique type numbers. For more information on monitor overpressure protection, see page 42.

Fluorocarbon (FKM) Trim – The Type 627 is available with Fluorocarbon (FKM) Trim for high temperature applications such as vaporizors. Part numbers are listed below with a 'V' suffix. Temperature ratings for the Type 627 with Fluorocarbon (FKM) Trim is 0 to 180°F / -18 to 82°C.

Type 1301F – The proven reliability and accurate regulation of the Type 1301F regulator makes it ideal for numerous high-pressure drop applications. This multi-purpose regulator can be used as pilot supply or pressure-loading regulators where high-pressure operating medium must be reduced for use by gas regulator pilots or pressure-loaded regulators.

UL® Listed Type 627 Constructions

TYPE	CAPACITIES[1] PROPANE		ORIFICE SIZE		INLET AND OUTLET CONNECTION	OUTLET PRESSURE RANGE		SETPOINT		MAXIMUM OPERATING INLET PRESSURE	
	BTU / hr	SCMH	In.	mm		psig	bar	psig	bar	psig	bar
627-5810	6,080,000	68.4	3/8	9.5	3/4 in. FNPT	5 to 20	0.34 to 1.4	10	0.69	250	17.2
627-5810V											
627-6210	10,755,000	121	1/2	13							
627-6210V											
627-7710	10,773,000				1 in. FNPT						
627-7710V											

1. For UL listed Type 627 configurations, capacity based on inlet pressure of 30 psig / 2.1 bar Internal registration and 20% droop.
NOTE: Additional spring ranges and body styles available. Ask your LPG Equipment Distributor for additional configurations and for more information.

Non-UL listed Type 627 Constructions

TYPE	CAPACITIES[2] PROPANE		ORIFICE SIZE		INLET AND OUTLET CONNECTION	OUTLET PRESSURE RANGE		SETPOINT		MAXIMUM OPERATING INLET PRESSURE	
	BTU / hr	SCMH	In.	mm		psig	bar	psig	bar	psig	bar
627R-117[3]	10,755,000	121	1/2	13	3/4 in. FNPT	5 to 20	0.34 to 1.4	10	0.69	200	13.8
627M-421[4]										250	17.2
627R-197[3]	10,773,000				1 in. FNPT					200	13.8
627M-471[4]										250	17.2
627-497	14,837,000	167				15 to 40	1.0 to 2.8	40	2.8		
627-577	20,948,000	235			2 in. FNPT						

2. For Non-UL listed Types 627 and 630 configurations, capacity based on inlet pressure 20 psig / 1.4 bar greater than outlet pressure, Internal registration and 20% droop.
3. "R" denotes token relief. Check with your LPG Equipment Distributor on relief capacities.
4. For monitor applications. Standard with blocked throat and external sensing.
NOTE: Additional spring ranges and body styles available. Ask your LPG Equipment Distributor for additional configurations and for more information.

Type 630 Regulator

TYPE	CAPACITIES IN BTU PER HOUR / SCMH PROPANE[2]		ORIFICE SIZE		INLET AND OUTLET CONNECTION	OUTLET PRESSURE RANGE		SETPOINT		MAXIMUM OPERATING INLET PRESSURE	
	BTU / hr	SCMH	In.	mm		psig	bar	psig	bar	psig	bar
630-104-78	14,000,000	158	1/2	13	2 in. FNPT	8 to 20	0.55 to 1.4	10	0.69	250	17.2

2. For Non-UL listed Types 627 and 630 configurations, capacity based on inlet pressure 20 psig / 1.4 bar greater than outlet pressure, Internal registration and 20% droop.
NOTE: Additional spring ranges and body styles available. Ask your LPG Equipment Distributor for additional configurations and for more information.

Commercial/Industrial High-Pressure Regulators

Regulators

FISHER

For Commercial and Industrial high-pressure applications, such as distributed community systems, factories, office buildings, restaurants, Emerson has a wide variety of products and solutions. For ease of reference, only the most popular commercial and industrial regulators are shown on these pages. Other orifice sizes, body sizes and outlet pressure ranges are available. The higher capacities on commercial and industrial installations usually require a Two-stage regulator system. Temperature ratings for the Type 99 is -20 to 180°F / -29 to 82°C.

Note: Because of various spring ranges and orifice sizes, all commercial and industrial regulators should be individually sized for the particular installation. Consult specific product bulletins for maximum pressure ratings. Contact your local LPG Equipment Distributor for assistance.

Type 99 – Pilot-operated unit keeps outlet pressure constant despite varying flow rates and inlet pressures. Designed to handle loads up to 74,318,000 BTU per hour / 837 SCMH, the Type 99 is ideal for multiple customer installations. The unique pilot design, with fast opening and closing operation, makes the Type 99 ideal for large industrial boiler applications. The Type 99 can be used for low or high-pressure applications. A downstream control line is required. Additional overpressure protection is recommended to prevent excessive buildup in the downstream line.

Note: Type 99 regulators do not have an internal relief and should be installed with additional/external overpressure protection. These units should not be installed as part of a two-stage system in fixed piping serving 14 in. w.c. / 35 mbar appliance systems unless additional overpressure protection is installed that will make the system compliant with NFPA 58 requirements for a two-stage system. Please consult with your LPG Equipment Distributor for more information.

TYPE 99-901PH PILOT-OPERATED REGULATOR

Flanged Bodies - 99F Series is equipped with 2 in. CL300 flanged bodies.

Overpressure Protection - The Type 99 is also available in monitor configurations. Note that the Type 99 monitor regulators have unique type numbers. For more information on monitor overpressure protection, see page 42.

Pilot-Operated High-Pressure Commercial/Industrial Regulators

TYPE	CAPACITIES (PROPANE)[1]		ORIFICE SIZE		INLET AND OUTLET CONNECTION	OUTLET PRESSURE RANGE		OUTLET PRESSURE SETTING		MAXIMUM OPERATING INLET PRESSURE	
	BTU / hr	SCMH	in.	mm		psig	bar	psig	bar	psig	bar
99-510P	29,400,000	331	7/8	22	2 in. FNPT	7 in. w.c. to 2	17 mbar to 0.14	1	69 mbar	250	17.2
99F-510P					2 in. / DN 50 CL300 FF						
99-511P	33,206,000	374			2 in. FNPT	1 to 5	69 mbar to 0.34	5	0.34		
99F-511P					2 in. / DN 50 CL300 FF						
99-513P	36,368,000	409			2 in. FNPT	2 to 10	0.14 to 0.69	10	0.69		
99F-513P					2 in. / DN 50 CL300 FF						
99-512P	37,950,000	427			2 in. FNPT	5 to 15	0.34 to 1.0	15	1.0		
99F-512P					2 in. / DN 50 CL300 FF						
99-515P	41,112,000	463			2 in. FNPT	10 to 20	0.69 to 1.4	20	1.4		
99F-515P					2 in. / DN 50 CL300 FF						
99-903P	44,275,000	498			2 in. FNPT	10 to 65	0.69 to 4.5	30	2.1		
99F-903P					2 in. / DN 50 CL300 FF						
99-502PH	50,600,000	570	1-1/8	29	2 in. FNPT	1 to 5	69 mbar to 0.34	5	0.34	300	20.7
99F-502PH					2 in. / DN 50 CL300 FF						
99-503PH	61,668,000	694			2 in. FNPT	2 to 10	0.14 to 0.69	10	0.69		
99F-503PH	61,668,000	694			2 in. / DN 50 CL300 FF						
99-504PH	63,250,000	712			2 in. FNPT	5 to 15	0.34 to 1.0	15	1.0		
99F-504PH	63,250,000	712			2 in. / DN 50 CL300 FF						
99-505PH	67,993,000	765			2 in. FNPT	10 to 20	0.69 to 1.4	20	1.4		
99F-505PH	67,993,000	765			2 in. / DN 50 CL300 FF						
99-901PH	74,318,000	837			2 in. FNPT	10 to 65	0.69 to 4.5	30	2.1		
99F-901PH	74,318,000	837			2 in. / DN 50 CL300 FF						

1. Capacity based on inlet pressure 20 psig / 1.4 bar greater than outlet pressure, external registration and 0.1 to 0.3 psi / 6.9 to 21 mbar proportional band.
NOTE: Additional spring ranges and body styles are available. Ask your LPG Equipment distributor for more information.

Type 1098 - The Type 1098-EGR regulator provides large capacities for use in large commercial applications and large distributed community systems. Designed to handle loads from 170,000,000 BTU / 1910 SCM (2 in. size) to in excess of 1,000,000,000 BTU / 11,234 SCM (4 in. size) and rated to 75 psig / 5.2 bar for Maximum Outlet Pressure, the Type 1098H is a regulator unmatched in performance in the LPG Industry. The Type 1098's pilot-operated two-path system is designed to quickly respond to sudden changes in the downstream demand, making this regulator ideal for fuel gas supply to industrial boilers, furnaces, ovens and mixers. Temperature rating for the Type 1098 is -20 to 180°F / -29 to 82°C. Actuator/diaphragm are size 40.

Type 1098H - The Type 1098H-EGR regulator also provides large capacities used in systems similar to Type 1098. The Type 1098H uses a special cast iron actuator assembly that increases the Maximum Downstream Pressure rating of the standard Type 1098 up to 300 psig / 20.7 bar, offering an even greater level of protection with outlet pressure settings up to 125 psig / 8.6 bar. Temperature rating for the Type 1098H is -20 to 180°F / -29 to 82°C. Actuator/diaphragm are size 30.

Flanged Bodies - The Types 1098 and 1098H are available with flanged bodies. Flanges are available in 2, 3 and 4 in. body sizes and CL300 FF end connection.

Note: Type 1098 regulators do not have an internal relief and should be installed with additional/external overpressure protection. These units should not be installed as part of a two-stage system in fixed piping serving 14 in. w.c. / 35 mbar appliance systems unless additional overpressure protection is installed that will make the system compliant with NFPA 58 requirements for a two-stage system. Please consult with your LPG Equipment Distributor for more information.

TYPE 1098-L22 PILOT-OPERATED REGULATOR

Overpressure Protection - The Types 1098 and 1098H is also available in monitor configurations. Note that the Type 1098H regulators may be used either as the worker or monitor regulator. For more information on monitor overpressure protection, see page 42.

The Type 1098 regulator is a highly advanced regulator with many configurations for various applications. **Always consult Emerson to discuss your application prior to placing your order.**

Pilot-Operated High-Pressure Commercial/Industrial Regulators

TYPE	CAPACITIES (PROPANE)		ORIFICE SIZE		INLET AND OUTLET CONNECTION	OUTLET PRESSURE RANGE		OUTLET PRESSURE SETTING		MAXIMUM OPERATING INLET PRESSURE	
	BTU / hr	SCMH	in.	mm		psig	bar	psig	bar	psig	bar
1098-L21	170,500,000[1]	1915[1]	2-3/8	60	2 in. FNPT	2 to 10	0.14 to 0.69	10	0.69	400	27.6
1098-L22	215,300,000[2]	2419[2]				3 to 40	0.21 to 2.7	20	1.4		
1098-L23	322,300,000[3]	3621[3]				35 to 75	2.4 to 5.2	50	3.4		
1098-F21	170,500,000[1]	1915[1]			2 in. / DN 50 CL300 RF	2 to 10	0.14 to 0.69	10	0.69		
1098-F22	215,300,000[2]	2419				3 to 40	0.21 to 2.7	20	1.4		
1098-F23	322,300,000[3]	3621[3]				35 to 75	2.4 to 5.2	50	3.4		
1098-F31	356,300,000[1]	4003[1]	3-3/8	86	3 in. / DN 80 CL300 RF	2 to 10	0.14 to 0.69	10	0.69		
1098-F32	447,400,000[2]	5026[2]				3 to 40	0.21 to 2.7	20	1.4		
1098-F33	669,500,000[3]	7521[3]				35 to 75	2.4 to 5.2	50	3.4		
1098-F41	551,300,000[4]	6193[4]	4-3/8	111	4 in. / DN 100 CL300 RF	2 to 10	0.14 to 0.69	10	0.69		
1098-F42	693,500,000[4]	7791[4]				3 to 40	0.21 to 2.7	20	1.4		
1098-F43	1,035,500,000[3]	11,633[3]				35 to 75	2.4 to 5.2	50	3.4		

NOTE: Additional spring ranges and body styles are available. Ask your LPG Equipment Distributor for more information.
1. Capacity based on 30 psig / 2.1 bar inlet pressure and 15 psig / 1.0 bar setpoint.
2. Capacity based on 40 psig / 2.8 bar inlet pressure and 20 psig / 1.4 bar setpoint.
3. Capacity based on 75 psig / 5.2 bar inlet pressure and 50 psig / 3.4 bar setpoint.
4. Capacity based on 25 psig / 1.7 bar inlet pressure greater than outlet pressure setting.


TYPE CS200


TYPE CS400


TYPE CS800

Emerson has a wide range of low-pressure regulators to meet almost any commercial or industrial application. For ease of reference, only the most popular commercial and industrial regulators are shown on this page. Other orifice sizes, body sizes and outlet pressure ranges are available. See the product guides on pages 36 and 38. The Commercial Service (CS) Regulator Series have a temperature rating of -20 to 160°F / -29 to 71°C, but have passed Fisher™ internal testing for lockup, relief start-to-discharge and reseal down to -40°F / -40°C.

Note: Because of various spring ranges and orifice sizes, all commercial and industrial regulators should be individually sized for the particular installation. Consult specific product bulletins for maximum pressures ratings. Contact your local LPG Equipment Distributor for assistance.

Type CS400 – The Type CS400 is a medium capacity low-pressure, direct-operated regulator designed for loads up to 7,800,000 BTU per hour / 88 SCMH, ideal for installations at schools, bakeries and many other commercial/industrial applications. Available in 1-1/4, 1-1/2 and 2 in. body sizes with spring ranges from 4.5 in. w.c. to 5.5 psig / 11 mbar to 0.38 bar.

Type CS200 – The Type CS200 is a medium capacity low-pressure, direct-operated regulator designed for loads up to 3,800,000 BTU per hour / 44 SCMH, ideal for installations on smaller commercial/industrial applications. Available in 3/4, 1 and 1-1/4 in. body sizes with spring ranges from 3.5 in. w.c. to 2 psig / 9 mbar to 0.14 bar.

Flanged Bodies – The Types CS400 and CS800 are available with a flanged body. Flanges are available in 2 in. / DN 50 body size and CL125 FF end connection.

Type CS800 – The Type CS800 is a direct-operated, spring-loaded regulator which has been engineered for low-pressure commercial service applications. This regulator can accommodate up to 21,600,000 BTU per hour / 243 SCMH of flow capacity and is available in 1-1/2 and 2 in. body sizes with 8 in. w.c. to 5.5 psig / 20 mbar to 0.38 bar pressure ranges.

Note: Types CS200, CS400 and CS800 regulators should be installed with additional/external overpressure protection. These units when installed as part of a two-stage system in fixed piping serving 14 in. w.c. / 35 mbar appliance systems require additional overpressure protection to make the system compliant with NFPA 58 requirements for a two-stage system. Please consult with your LPG Equipment Distributor for more information.

Low-Pressure Commercial Regulators

TYPE	CAPACITIES (PROPANE)[1]		ORIFICE SIZE		INLET AND OUTLET CONNECTION, IN.	OUTLET PRESSURE RANGE		OUTLET PRESSURE SETTING		MAXIMUM OPERATING INLET PRESSURE	
	BTU / hr	SCMH	In.	mm		psig	bar	psig	bar	psig	bar
CS200IR-6EC1	2,500,000	28	1/2	13	3/4 FNPT	10 to 14 in. w.c.	25 to 35 mbar	11 in. w.c.	27 mbar	40	2.8
CS200IR-6EC3	3,800,000	43			1 FNPT						
CS200IR-6EC6	3,900,000	44			1-1/4 FNPT						
CS400IR-8EC6	6,800,000	76	3/4	19.1	1-1/4 FNPT					20	1.4
CS400IR-8EC7	7,600,000	85			1-1/2 FNPT						
CS400IR-8EC8	7,600,000	85			2 FNPT						
CS800IR-8CC7	10,460,000	118	1	25.4	1-1/2 FNPT	8 to 12 in. w.c.	20 to 30 mbar			30	2.1
CS800IR-8CC8	21,809,000	245			2 FNPT						
CS200IR-6HC1	3,760,000	42	1/2	13	3/4 FNPT	1 to 2	0.06 to 0.14	2	0.14	40	2.8
CS200IR-6HC3	4,780,000	54			1 FNPT						
CS200IR-6HC6	5,327,000	60			1-1/4 FNPT						
CS400IR-8HC6	9,715,000	109	3/4	19.1	1-1/4 FNPT					20	1.4
CS400IR-8HC7	10,500,000	118			1-1/2 FNPT						
CS400IR-8HC8	8,775,000	99			2 FNPT						
CS820IR-8FC7	15,011,000	169	1	25.4	1-1/2 FNPT	1 to 2.5	0.06 to 0.17			30	2.1
CS820IR-8FC8	21,436,000	241			2 FNPT						
CS400IR-8IC6	7,365,000	83	3/4	19.1	1-1/4 FNPT	2 to 5.5	0.14 to 0.38	5	0.35	20	1.4
CS400IR-8IC7	6,895,000	77			1-1/2 FNPT						
CS400IR-8IC8	7,365,000[2]	83[2]			2 FNPT						
CS820IR-8HC7	15,262,000	171	1	25.4	1-1/2 FNPT	2.5 to 5.5	0.17 to 0.38			30	2.1
CS820IR-8HC8	16,532,000	186			2 FNPT						

1. Capacities are based on 10 psig / 0.69 bar and 2 in. w.c. / 5 mbar droop.
2. Capacities are based on 10 psig / 0.69 bar and 20% droop.
NOTE: Additional combinations of body sizes, spring ranges and orifice sizes are available. See guides on the next page. Consult your LPG Equipment distributor for more information.

Type CS200 Selection Guide

BASE		SENSING		RELIEF		ORIFICE		REGULATOR SETPOINT		BODY OPTION	
CODE	DESCRIPTION	CODE	DESCRIPTION	CODE	DESCRIPTION	CODE	SIZE In. / mm	CODE	In. w.c. / mbar	CODE	DESCRIPTION
CS200	Basic	I	Internal	N	None	1	1/8 / 3.2	A	3.5 to 5 / 9 to 12	C1	3/4 in. FNPT, Cast Iron
				R	Internal	2	3/16 / 4.8	B	4.5 to 6.5 / 11 to 16	C3	1 in. FNPT, Cast Iron
						3	1/4 / 6.4	C	6 to 8 / 15 to 20	C6	1-1/4 in. FNPT, Cast Iron
						5	3/8 / 9.5	D	7.5 to 11 / 19 to 27		
						6	1/2 / 13	E	10 to 14 / 25 to 35		
								F	12 to 19 / 30 to 47		
								G	18 to 1 psig / 45 mbar to 0.06 bar		
								H	1 to 2 psig / 0.06 to 0.13 bar		

Type CS400 Selection Guide

BASE		SENSING		RELIEF		ORIFICE		REGULATOR SETPOINT		BODY OPTION	
CODE	DESCRIPTION	CODE	DESCRIPTION	CODE	DESCRIPTION	CODE	SIZE, In. / mm	CODE	In. w.c. / mbar	CODE	DESCRIPTION
CS400	Basic	I	Internal	N	None	2	3/16 / 4.8	A	3.5 to 5 / 9 to 12	C6	1-1/4 in. FNPT, Cast Iron
		E	External	R	Internal	3	1/4 / 6.4	B	4.5 to 6.5 / 11 to 16	C7	1-1/2 in. FNPT, Cast Iron
				T	Token	5	3/8 / 9.5	C	6 to 8 / 15 to 20	C8	2 in. FNPT, Cast Iron
						6	1/2 / 13	D	7.5 to 11 / 19 to 27	C9	2 in. / DN 50, CL150 FF, Ductile Iron
						8	3/4 / 19	E	10 to 14 / 25 to 35		
								F	12 to 19 / 30 to 47		
								G	18 to 1 psig / 45 mbar to 0.06 bar		
								H	1 to 2 psig / 0.06 to 0.13 bar		
								I	2 to 5.5 psig / 0.14 to 0.38		

Type CS800 Selection Guide

BASE		SENSING		RELIEF		ORIFICE		REGULATOR SETPOINT		BODY OPTION	
CODE	DESCRIPTION	CODE	DESCRIPTION	CODE	DESCRIPTION	CODE	SIZE, In. / mm	CODE[1]	In. w.c. / mbar	CODE	DESCRIPTION
CS800	Basic	I	Internal	N	None	2	1/4 / 6.4	A	3.5 to 6 / 9 to 15	C6	1-1/4 in. FNPT, Gray Iron
CS820	High Outlet	E	External	R	Internal	3	3/8 / 9.5	B	5.5 to 8.5 / 11 to 16	C7	1-1/2 in. FNPT, Gray Iron
				T	Token	4	1/2 / 13	C	8 to 12 / 15 to 20	C8	2 in. FNPT, Gray Iron
				Q	High Capacity	6	3/4 / 19.1	D	10 to 16 / 25 to 40	C9	2 in. / DN 50, CL125 FF, Gray Iron
						8	1 / 25	E	14 to 30 / 25 to 75	D11	2 in. / DN 50, CL150 FF, Ductile Iron
						9	1-3/8 / 35	F	1 to 2.5 psig / 0.06 to 0.17 bar		
								G	1.5 to 3.5 / 0.10 to 0.24 bar		
								H	2.5 to 5.5 / 0.17 to 0.38 bar		

1. Code A to E only applies to Type CS800. Code F to H only applies to Type CS820.

Type CS403 with Integral True-Monitor™ Protection

1-1/4 in. FNPT to 2 in. FNPT Body Sizes
(2 in. / DN 50, CL150 Flange Available)
7.65 to 8.44M BTU per hour / 85.9 to 94.8 SCMH
Internal Registration

Type CS403: Combines operation of a conventional two-regulator wide-open monitor set into one body. During normal operation, the monitor is in a wide open state at a setpoint higher than the primary regulator. If the downstream pressure should rise due to loss of control by the primary regulator, the integral monitor will assume control and regulate the flow to the downstream system.

See Selection Guide on the next page for available options.

TYPE CS403

PRIMARY SETPOINT	MONITOR SETPOINT	MONITOR SPRING RANGE
In. w.c. / mbar	In. w.c. / mbar	Spring Range
11 / 27	21 / 52	16 to 23 in. w.c. / 40 to 57 mbar
2 psig / 0.14 bar	2.5 psig / 0.17 bar	1.5 to 2.5 psig / 0.10 to 0.17 bar
5 psig / 0.35 bar	6 psig / 0.41 bar	4 to 7.5 psig / 0.28 to 0.52 bar

Type CS404 with Integral Slam shut

1-1/4 in. FNPT to 2 in. FNPT Body Sizes
(2 in. / DN 50, CL150 Flange Available)
7.65 to 8.44M BTU per hour / 85.9 to 94.8 SCMH
Internal Registration

Type CS404: Integrates a fast acting shutoff device that provides overpressure shutoff (OPSO) or over/underpressure shutoff (UPSO/OPSO) protection by completely shutting off the flow of gas to the downstream system. The Slam Shut operates independently of the main regulator and does not affect normal operation unless the downstream pressure fluctuates outside of the desired ranges.

See Selection Guide on the next page for available options.

TYPE CS404

PRIMARY SETPOINT	SLAM-SHUT SETPOINT	
	OPSO	UPSO - OPSO
In. w.c. / mbar	In. w.c. / mbar	In. w.c. / mbar
7 / 17	17 / 42	- - - -
11 / 27	19 / 47	6.3 / 16 - 25 / 62
14 / 35	30 / 75	8.8 / 22 - 28 / 70
1 psig / 0.07 bar	1.9 psig / 0.13 bar	16 / 40 - 1.9 psig / 0.13 bar
2 psig / 0.14 bar	3.3 psig / 0.23 bar	1 psig / 0.07 bar - 3.2 psig / 0.22 bar
5 psig / 0.35 bar	6.7 psig / 0.46 bar	2.9 psig / 0.20 bar - 7.5 psig / 0.52 bar

Types CS803 and CS823 with Integral True-Monitor Protection

1-1/2 in. FNPT and 2 in. FNPT Body Sizes
(2 in. / DN 50, CL150 Flange Available)
10.46 to 21.44M BTU per hour / 118 to 241 SCMH
Internal Registration

Type CS803: Designed to deliver less than 1 psig, the Type CS803 combines operation of a conventional two-regulator wide-open monitor set into one body. During normal operation, the monitor is in a wide open state at a setpoint higher than the primary regulator. If the downstream pressure should rise due to loss of control by the primary regulator, the integral monitor will assume control and regulate the flow to the downstream system.

Type CS823: Equipped with the same technolgy as the Types CS803 and Type CS823 delivers up to 5.5 psig / 0.38 bar operating pressures.

See Selection Guide on the next page for available options.

TYPE CS803

PRIMARY SETPOINT	MONITOR SETPOINT	MONITOR SPRING RANGE
In. w.c. / mbar	In. w.c. / mbar	Spring Range
11 / 27	21 / 52	16 to 23 in. w.c. / 40 to 57 mbar
2 psig / 0.14 bar	2.5 psig / 0.17 bar	1.5 to 2.5 psig / 0.10 to 0.17 bar
5 psig / 0.35 bar	6 psig / 0.41 bar	4 to 7.5 psig / 0.28 to 0.52 bar

Type CS403 Selection Guide

BASE		SENSING		RELIEF		ORIFICE		REGULATOR SETPOINT		BODY OPTION	
CODE	DESCRIPTION	CODE	DESCRIPTION	CODE	DESCRIPTION	CODE	SIZE, in. / mm	CODE	Primary - Monitor in. w.c. / mbar	CODE	DESCRIPTION
CS403	Integral Monitor	I	Internal	N	None	2	3/16 / 4.8	D	11 / 27 - 21 / 52	D2	1-1/4 in. FNPT, Ductile Iron
		E	External	T	Token	3	1/4 / 6.4	H	2 psig / 0.14 bar - 2.5 psig / 0.17 bar	D3	1-1/2 in. FNPT, Ductile Iron
						5	3/8 / 9.5	L	5 psig / 0.35 bar - 6 psig / 0.41 bar	D4	2 in. FNPT, Ductile Iron
						6	1/2 / 13			D9	2 in. / DN 50, CL125 FF, Ductile Iron
						8	3/4 / 19				

Type CS404 Selection Guide

BASE		SENSING		RELIEF		ORIFICE		REGULATOR SETPOINT		BODY OPTION	
CODE	DESCRIPTION	CODE	DESCRIPTION	CODE	DESCRIPTION	CODE	SIZE, in. / mm	CODE	Primary - Slam shut in. w.c. / mbar	CODE	DESCRIPTION
CS404	Integrated Slam shut	I	Internal	N	None	2	3/16 / 4.8	D	11 / 27 - 19 / 47	D2	1-1/4 in. FNPT, Ductile Iron
		E	External	T	Token	3	1/4 / 6.4	K	2 psig / 0.14 bar - 3.3 psig / 0.23 bar	D3	1-1/2 in. FNPT, Ductile Iron
						5	3/8 / 9.5	N	5 psig / 0.35 bar - 6.7 psig / 0.46 bar	D4	2 in. FNPT, Ductile Iron
						6	1/2 / 13	V*	11 in. w.c. / 27 mbar - 6.3 in. w.c. / 16 mbar - 25 in. w.c. / 62 mbar	D9	2 in. / DN 50, CL125 FF, Ductile Iron
						8	3/4 / 19	AB*	2 / 0.14 - 1 / 0.06 - 3.2 / 0.22		
								AE*	5 / 0.35 - 2.9 / 0.2 - 7.5 / 0.52		

* set pressures for: Primary - Underpressure - Overpressure. Units are in psig / bar

Types CS803 and CS823 Selection Guide

BASE		SENSING		RELIEF		ORIFICE		REGULATOR SETPOINT		BODY OPTION	
CODE	DESCRIPTION	CODE	DESCRIPTION	CODE	DESCRIPTION	CODE	SIZE in. / mm	CODE	in. w.c. / mbar	CODE	DESCRIPTION
CS803	Integral Monitor, in. w.c.	I	Internal	N	None	2	1/4 / 6.4	D	11 / 27	D3	1 1/2 in. FNPT, Ductile Iron
CS823	Integral Monitor, psig	E	External	T	Token	3	3/8 / 9.5	H	2 psig / 0.14 bar	D4	2 in. FNPT, Ductile Iron
						5	1/2 / 13	L	5 psig / 0.35 bar	D9	2 in. CL125 FF/ CL150 FF Cast Iron
						6	3/4 19				
						8	1 / 25				

Industrial Service Low-Pressure Regulators

Regulators

TYPE 133H
OR 133L

TYPE 299H

TYPE 99

Emerson has a wide range of low-pressure regulators to meet almost any commercial or industrial application. For ease of reference, only the most popular commercial and industrial regulators are shown on this page. Other orifice sizes, body sizes and outlet pressure ranges are available.

Note: Because of various spring ranges and orifice sizes, all commercial and industrial regulators should be individually sized for the particular installation. Consult specific product bulletins for maximum pressures ratings. Contact your local LPG Equipment Distributor for assistance.

Type 299H – A high capacity pilot-operated regulator. Incorporates a lightweight design (21 lbs / 10 kg) with dependable operation. With a capacity up to 38,000 000 BTU per hour / 428 SCMH, the Type 299H is ideal for applications from large commercial sites to smaller multi-dwelling establishments. The unit comes with a 1-1/2 or 2 in. cast iron body with internal or external registration. Internal registration allows easy installation while external registration provides higher accuracy. 2 in. / DN 50 flanged body or steel body material also available. Alternate outlet settings from 3.5 in. w.c. to 60 psig / 9 mbar to 4.1 bar are available. Temperature ratings for the Type 299H is -20 to 150°F / -29 to 66°C. **The Type 299H has maximum inlet pressure rating of 150 psig / 10 bar so it cannot be used as a First-Stage regulator.**

Type 99 – Pilot-operated unit keeps outlet pressure constant despite varying flow rates and inlet pressures. Designed to handle loads up to 63,250,000 BTU per hour / 712 SCMH, the Type 99L is ideal for multiple customer installations. The unique pilot design, with fast opening and closing operation, makes the Type 99L ideal for large industrial boiler applications. The Type 99L can be used for low pressure. A downstream control line is required. Temperature ratings for the Type 99 is -20 to 160°F / -29 to 82°C.

133 Series – Direct-operated Second-Stage regulator ideal for large industrial applications with loads up to 70,875,000 BTU per hour / 798 SCMH. The unit can be used for either low pressure or pounds service. Maximum inlet pressure is 60 psig / 4.1 bar and a downstream control line is required. The 133 Series has a temperature rating of -20 to 150°F / -29 to 66°C.

Low-Pressure Commercial/Industrial Regulators

TYPE	CAPACITIES (PROPANE)		ORIFICE SIZE		INLET AND OUTLET CONNECTION, IN.	OUTLET PRESSURE RANGE		OUTLET PRESSURE SETTING		MAXIMUM OPERATING INLET PRESSURE	
	BTU / hr	SCMH	In.	mm		psig	bar	psig	bar	psig	bar
299H-101	13,100,000[1]	148[1]	3/4	19	1-1/2 FNPT	9 to 20 in. w.c.	22 to 50 mbar	11 in. w.c.	27 mbar	150	10.3
299H-102	19,700,000[1]	222[1]			2 FNPT						
299H-103	23,300,000[2]	262[2]			1-1/2 FNPT	6 to 16	0.41 to 1.1	10	0.69		
299H-104	38,000,000[2]	428[2]			2 FNPT						
299H-105	20,400,000[3]	230[3]			1-1/2 FNPT	9 to 20 in. w.c.	22 to 50 mbar	11 in. w.c.	27 mbar		
299H-106					2 FNPT						
299H-107	38,000,000[4]	428[4]			1-1/2 FNPT	6 to 16	0.41 to 1.1	10	0.69		
299H-108					2 FNPT						
99-501P	49,000,000[6]	552[6]	1-1/8	29	2 FNPT	7 in. w.c. to 2 psig	17 mbar to 0.14 bar	1	69 mbar	150	10.3
99-502P	50,600,000[6]	570[6]				1 to 5	69 mbar to 0.34 bar	5	0.34		
99-503P	61,650,000[6]	694[6]				2 to 10	0.14 to 0.69	10	0.69		
99-504P	63,250,000[6]	712[6]				5 to 15	0.34 to 1.0	15	1.0		
133L-4	70,875,000[3]	798[3]	2	51		8.5 to 18 in. w.c.	21 to 45 mbar	14 in. w.c.	35 mbar	60	4.1
133H-1	66,150,000[5]	745[5]				1.5 to 3	0.10 to 0.21	3	0.21		
133H-3	115,958,000[6]	1305[6]				5 to 10	0.34 to 0.69	10	0.69		

1. Capacity based on inlet pressure of 10 psig / 0.69 bar, Internal Registration and 2 in. w.c. / 5 mbar droop.
2. Capacity based on inlet pressure of 20 psig / 1.4 bar higher than outlet pressure, Internal Registration and 20% droop.
3. Capacity based on inlet pressure of 10 psig / 0.69 bar, External Registration and 2 in. w.c. / 5 mbar droop.
4. Capacity based on inlet pressure of 20 psig / 1.4 bar higher than outlet pressure, External Registration and 2 in. w.c. / 5 mbar droop.
5. Capacity based on inlet pressure of 10 psig / 0.69 bar, External Registration and 20% droop.
6. Capacity based on inlet pressure of 20 psig / 1.4 bar higher than outlet pressure, External Registration and 20% droop.

NOTE: Additional spring ranges and body styles are available. Ask your LPG Equipment Distributor for more information.

Commercial Automatic Changeover Regulators

Designed for large capacity multi-cylinder or tank installations, these regulators are used on applications such as bakeries, motels, restaurants and grain dryers. The manifold portion of the assembly consists of two 64 Series regulators and a direct mounted 803 Series indicator. Temperature rating for the Type 64SR-122 is -20 to 150°F / -29 to 66°C.

Type 64SR-122 – For high pressure (pounds-to-pounds) service with the outlet pressure supplied by a Type 64SR that has internal relief protection.

TYPE 64SR-122

Commercial Automatic Changeover Regulators					
TYPE	CAPACITIES IN BTU per hour / SCMH PROPANE[1]	INLET CONNECTION, IN.	OUTLET CONNECTION, IN.	OUTLET PRESSURE SETTING, psig / bar	OUTLET ADJUSTMENT RANGE, psig / bar
64SR-122	1,210,000 / 13.6	1/2 FNPT	1/2 FNPT	10 / 0.69	5 to 20 / 0.34 to 1.4

Changeover Manifold Assemblies

Type R130-21 – Composed of two Type 67C regulators and a special 0 to 60 psig / 0 to 4.1 bar pressure gauge, the Type R130 delivers a 45 psig / 3.1 bar outlet pressure on supply and 30 psig / 2.1 bar on reserve. The gauge, which serves as the changeover indicator, is painted red from 0 to 35 psig / 0 to 2.4 bar. When the dial reads in the 0 to 35 psig / 0 to 2.4 bar range, it indicates that the manifold has switched from the supply to the reserve cylinder. The Type R130-21 has a temperature rating of -20 to 160°F / -29 to 71°C.

Type 749B-21 – Large capacity changeover manifold for commercial and industrial applications. It consists of two 64 Series regulators and a 803 Series direct indicator. The assembly is used primarily in conjunction with either a Type HSRL or 64SR regulator. The standard outlet setting is 15 psig / 1.0 bar from the supply and 5 psig / 0.34 bar from the reserve. Temperature rating for the Type 749B-21 is -20 to 150°F / -29 to 66°C.

Note: These units are intended for use with Second-Stage regulators and/or separate relief devices which provide overpressure protection required by NFPA 58. Capacity of all these changeover manifolds is dependent on the size of the Second-Stage regulator with which they are used. If the manifolds are used as a Final-Stage (pounds-to-pounds), a relief valve is required in the downstream system.

TYPE R130-21

TYPE 749B-21

Remote Indicator

803 Series – give remote visual indication that the supply cylinder is empty and that the regulator is withdrawing gas from the reserve cylinder. The indicator has 360° visibility and is weatherproof.

Type 803-21 – Indicator only

TYPE 803-21

Changeover Manifold Regulators					
TYPE	CAPACITIES IN BTU per hour / SCMH PROPANE[1]	INLET CONNECTION, IN.	OUTLET CONNECTION, IN.	OUTLET PRESSURE SETTING	
				Supply Setting, psig / bar	Reserve Setting, psig / bar
R130-21	1,475,000 / 16.6	1/4 FNPT	1/4 FNPT	45 / 3.1	30 / 2.1
749B-21	1,500,000 / 16.9	1/2 FNPT	1/2 FNPT	15 / 1.0	5 / 0.34

1. Based on 100 psig / 6.9 bar inlet, reserve setting.

Monitor Overpressure Protection

Regulators

Monitoring is overpressure control by containment. When the working pressure reducing valve ceases to control the pressure, a second regulator installed in series, which has been sensing the downstream pressure, goes into operation to maintain the downstream pressure at a slightly higher than normal pressure. The monitoring concept is gaining in popularity, especially in low-pressure systems, because very accurate relay points permit reasonably close settings of the working and monitoring regulators.

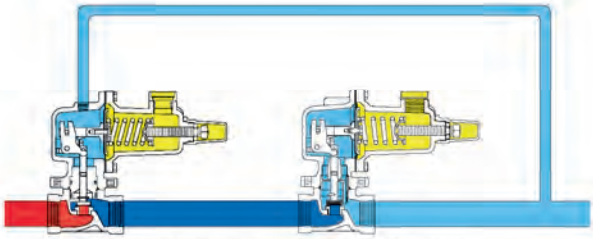

TYPE 627M (DIRECT-OPERATED) MONITOR

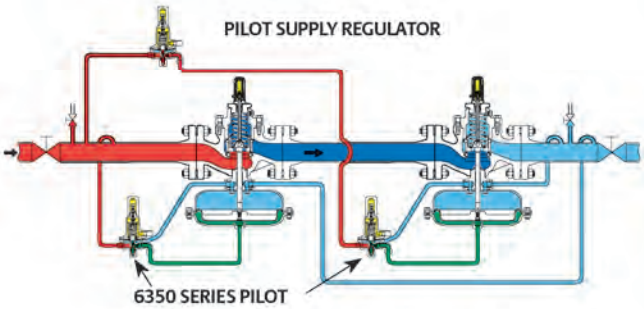

TYPE 1098H (PILOT-OPERATED) MONITOR

- INLET PRESSURE
- OUTLET PRESSURE
- LOADING PRESSURE
- ATMOSPHERIC PRESSURE
- INTERMEDIATE PRESSURE

The major advantage is that there is no venting to atmosphere. During an overpressure situation, monitoring keeps the customer on line and keeps the downstream pressure relatively close to the setpoint of the working regulator. Testing is relatively easy and safe. To perform a periodic test on a monitor, increase the outlet set pressure of the working device and watch the pressure to determine if the monitor takes over.

When selecting regulators for use in a monitor system, the upstream regulator must have a control line. When determining the capacity of a monitor system you will get approximately 70% to 73% of the capacity of a single regulator when using the same regulator for both regulators in the system.

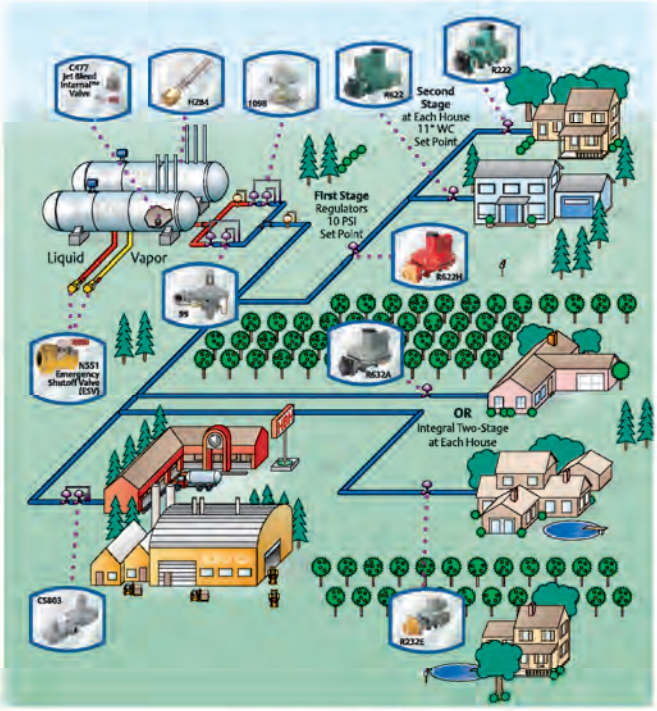

COMMUNITY SYSTEM MAP

Fisher™ offers a wide variety of products for monitor applications. Provided for your reference below is a list of commonly used regulators for various capacity requirements. Note that pilot-operated regulators may be used in conjunction with direct-operated regulators in monitor applications, depending on the application requirement. Please call your local LPG Equipment Distributor to review your monitor requirements.

Typical Wide-Open Monitor System

OPERATING REGULATOR	ORIFICE SIZE		BODY SIZE, IN.	MONITOR REGULATOR	ORIFICE SIZE		BODY SIZE, IN.	REGULATING CAPACITY[1]	
	In.	mm			In.	mm		BTU/hr	SCMH
Type 627-5810	3/8	9.53	3/4 NPT	Type 627M-421	1/2	13	3/4 NPT	5,750,000	64.6
Type 627-6210	1/2	13	3/4 NPT	Type 627M-421			3/4 NPT	7,050,000	79.2
Type 627-7710			1 NPT	Type 627M-471			1 NPT		
Type 630-104/78			2 NPT	Type 627M-267			2 NPT	8,400,000	94.4
Type 630-104/78			2 NPT	Type 99M-504PH	1-1/8	28.6	2 NPT	13,500,000	152
Type 99-504PH	1-1/8	28.6	2 NPT	Type 99M-504PH			2 NPT	42,650,000	479
Type 99-504PH			2 NPT	Type 1098H	2-3/8	60.3	2 NPT	54,500,000	612
Type 1098	2-3/8	60.3	2 NPT	Type 1098H			2 NPT	136,900,000	1538
Type 1098			3 NPT	Type 1098H	3-3/8	85.7	3 NPT	283,700,000	3187
Type 1098			4 NPT	Type 1098H	4-3/8	111	4 NPT	437,800,000	4918

1. Capacities are based on 30 psig / 2.1 bar in and 8 psig / 0.55 bar out.

Relief Valve for Liquid or Vapor Service

Type MR98H – is a direct-operated relief valve for use on relief and backpressure applications involving large LPG pumping systems and vaporizers. Internal pressure registration eliminates the need for a control line. Body materials are available in Gray Cast Iron, Steel or Stainless Steel. It is available with Nitrile (NBR) gaskets in sizes from 1/4 in. to 2 in. / 6.35 to 50.8 mm. Relief pressure ranges from 15 to 200 psi / 1.03 to 13.8 bar. Temperature ratings are -40 to 180°F / -40 to 82°C for CI and SST and -20 to 180°F / -29 to 82°C for Steel. Available with: gauge port on inlet, gauge port on outlet and Fluorocarbon (FKM) elastomers.

Type MR98HH – Same features as above but relief pressure range is 150 to 375 psig / 10.3 to 25.9 bar.

TYPE MR98H

TYPE MR98HH

Liquid Service Relief Valves

TYPE	BODY SIZE, IN.	RELIEF PRESSURE RANGE		RELIEF PRESSURE SETTING		PROPANE RELIEF CAPACITY GPM / l/min AT FOLLOWING PRESSURE BUILD-UP OVER RELIEF SETTING									
						5 psig / 0.34 bar		10 psig / 0.69 bar		20 psig / 1.4 bar		30 psig / 2.1 bar		50 psig / 3.4 bar	
		psig	bar	psig	bar	GPM	l/min	GPM	l/min	GPM	l/min	GPM	l/min	GPM	l/min
MR98H-13	1/2 FNPT	25 to 75	1.7 to 5.2	50	3.4	16.9	66.1	26.8	103.4	38.0	140.8	40.8	154.9	49.3	184.5
MR98H-22	3/4 FNPT	70 to 140	4.8 to 9.7	100	6.9	32.4	121.0	53.5	201.4	78.9	300.0	87.3	331.0	104.2	394.4
MR98H-30	1 FNPT	70 to 140	4.8 to 9.7	100	6.9	32.4	121.0	53.5	201.4	78.9	300.0	87.3	331.0	104.2	394.4
MR98H-31	1 FNPT	130 to 200	9.0 to 13.8	175	12.1	29.6	112.4	47.9	178.9	77.5	291.5	90.1	342.3	118.3	446.5
MR98HH-19	1 FNPT	150 to 375	10.3 to 25.9	250	17.2	27.6	104.4	37.7	142.3	61.7	233.8	83.4	315.5	113.0	426.8

Vapor Relief Valves

Type 1805 – relief valve is designed for installation between the First and Second-Stage regulators or in the downstream line from a high-pressure regulator used for a Final-Stage service where high line pressures are allowed. Available in 1 or 2 in. valve bodies with a temperature rating of -20 to 150°F / -29 to 66°C.

Type 289H – relief valve is designed for installation downstream of larger high-pressure or low-pressure regulators in most all relief applications. The larger diaphragm in this relief valve provides extremely sensitive operation, with a temperature rating of -20 to 150°F / -29 to 66°C.

Types 1808 and 1808A – pilot-operated relief valve is designed to protect large high-pressure regulators by offering extremely high relief capacities compared to the Type 289H. The Type 1808 has a temperature rating of -20 to 180°F / -29 to 82°C.

TYPE 1805

TYPE 289H

TYPE 1808

Vapor Relief Valves

TYPE	BODY SIZE, IN.	RELIEF START-TO-DISCHARGE		SPRING RANGE		PRESSURE BUILDUP OVER SET PRESSURE		CAPACITY (AIR)	
		psig	bar	psig	bar	psig	bar	SCFH	Nm^3/h
1805-18P	1 FNPT	15	1.03	5 to 35	0.34 to 2.41	15	1.03	6160 at 30 psig	161 at 2.07 bar
1805-19P	1 FNPT	40	2.75	10 to 60	0.69 to 4.1	15	1.03	3120 at 55 psig	83.62 at 3.79 bar
1805-51P	2 FNPT	15	1.03	5 to 20	0.34 to 1.38	15	1.03	28,500 at 30 psig	748 at 2.07 bar
1805-52P	2 FNPT	40	2.75	10 to 50	0.69 to 3.4	15	1.03	14245 at 55 psig	381.77 at 3.79 bar
1808A-61	2 FNPT, Angle	20	1.4	15 to 40	1.03 to 2.76	10	0.69	78,230 at 30 psig	2053 at 2.07 bar
289H-42	1 FNPT	15	1.03	4 to 15	0.28 to 1.03	15	1.03	33,880 at 30 psig	889 at 2.07 bar
289H-2	2 FNPT	24 in. w.c.	60 mbar	1/2 to 2-1/4	34 to 155 mbar	1.13	78 mbar	15,400 at 2 psig	38 at 138 mbar

NOTE: Some regulators will require more than one relief valve. Consult your local Fisher™ LPG Distributor for proper relief valve sizing.

TYPE Y602-1 (UMBRELLA TYPE)

TYPE Y602-13 (ANGLE TYPE)

Vent Assemblies

Attached directly to the regulator vent connection to a regulator vent line, vent assemblies should be pointed downward on outdoor installations to avoid moisture build-up in the regulator spring case. Units with stabilizer assembly are intended for regulators with stability problems. The stabilizer gives a restricted breathing rate under normal conditions, opening for rapid discharge when necessary. Screen material is Monel® with integral plastic screen for all except Type Y602-12.

Vent Assemblies

TYPE		SIZE	STABILIZER
Umbrella Type	Angle Type		
----	Y602-13	1/4 in. FNPT	No
----	Y602-14		Yes
Y602-1	----	1/4 in. MNPT	No
Y602-2	----		Yes
Y602-3	----	3/8 in. O.D. Tubing (Flare Connection)	No
Y602-4	----		Yes
Y602-12	----	1/4 in. MNPT	No
----	Y602-5	3/8 in. FNPT	No
----	Y602-6		Yes
----	Y602-7	1/2 in. FNPT	No
----	Y602-8		Yes
----	Y602-9	3/4 in. FNPT	No
----	Y602-23	3/4 in. MNPT	No
----	Y602-25	1 in. MNPT	No

TYPE 912-101

Small Portable Appliance Regulators

Type 912 – Designed for use on small portable outdoor appliances.

Underwriters Laboratory (UL®) requires horizontally mounted regulators to be installed with vent opening protection to prevent blockage by freezing rain. The 912 Series has a temperature rating of -20 to 160°F / -29 to 71°C.

Appliance Regulators

TYPE	PRESSURE RANGE		OUTLET PRESSURE		Capacities in BTU per hour Propane			INLET CONNECTION		OUTLET CONNECTION		ORIFICE SIZE	
	In. w.c.	mbar	In. w.c.	mbar	10 psig, Inlet	25 psig, Inlet	100 psig, Inlet	In.	mm	In.	mm	In.	mm
912N-194[1]	3 to 7	7 to 17	5	12	101,000	151,000	----	1/4	6.4	1/4	6.4	0.073	1.85
912-104	9.25 to 13	23 to 32	11	27	101,000	270,000	349,000	1/4	6.4	1/4	6.4	0.073	1.85
912N-109[1]	5 to 10	12 to 25	7	17	123,000	232,000	556,000	1/4	6.4	3/8	9.5	0.073	1.85
912-101	9.25 to 13	23 to 32	11	27	110,000	201,000	494,000	1/4	6.4	3/8	9.5	0.073	1.85
912-122	9.25 to 13	23 to 32	11	27	110,000	201,000	494,000	1/4	6.4	3/8	9.5	0.073	1.85
912H-108	0.5 to 2.7 psig	0.03 to 0.19 bar	1.5 psig	103	131,000	202,000	470,000	1/4	6.4	3/8	9.5	0.094	2.39

1. Not UL listed.

TYPE P100A

TYPE P100C

Mounting Brackets

Mounting brackets are used to mount regulators securely to the container or to the side of the building.

Mounting Brackets		
REGULATOR TYPE	BRACKET STYLE	
	Triangular	Bowtie
R622, R632, R642 and R622H	P100A	P100C
R122H, R222 and R232	P100A	----
912	P100A	----

TYPE 50-2

TYPE 50P-5

TYPE 50P-2

Test Gauge Assemblies

The 50 Series test gauges are used to check appliance line pressure after the regulator has been installed.

Test Gauge Assemblies				
TYPE	INLET CONNECTION	HOSE	PLASTIC	RANGE, IN. W.C. / mbar
50-2	1/4 in. MNPT	No	No	0 to 35 / 0 to 87
50P-2	Female Hose	Yes	Yes	
50P-5		Yes	No	

Terluran® is a trademark of BASF.

TYPE P499

TYPE P500

Adaptor With Screen (Type P499)

Used to convert a 1/4 in. NPT inlet on regulators such as Types 912 and 67C to an inverted flare.

Type P500 Plug

Keeps dirt and foreign material from entering changeover assemblies. 1/4 in. Inverted Flare.

Type P501 Filter Assembly

Intended for the inlet of 67C Series regulators, the Type P501 prevents foreign material from reaching the regulator's valve disc.

Adaptor with Screen	
TYPE	SIZE
P499	1/4 in. Inverted Flare x 1/4 in. MNPT

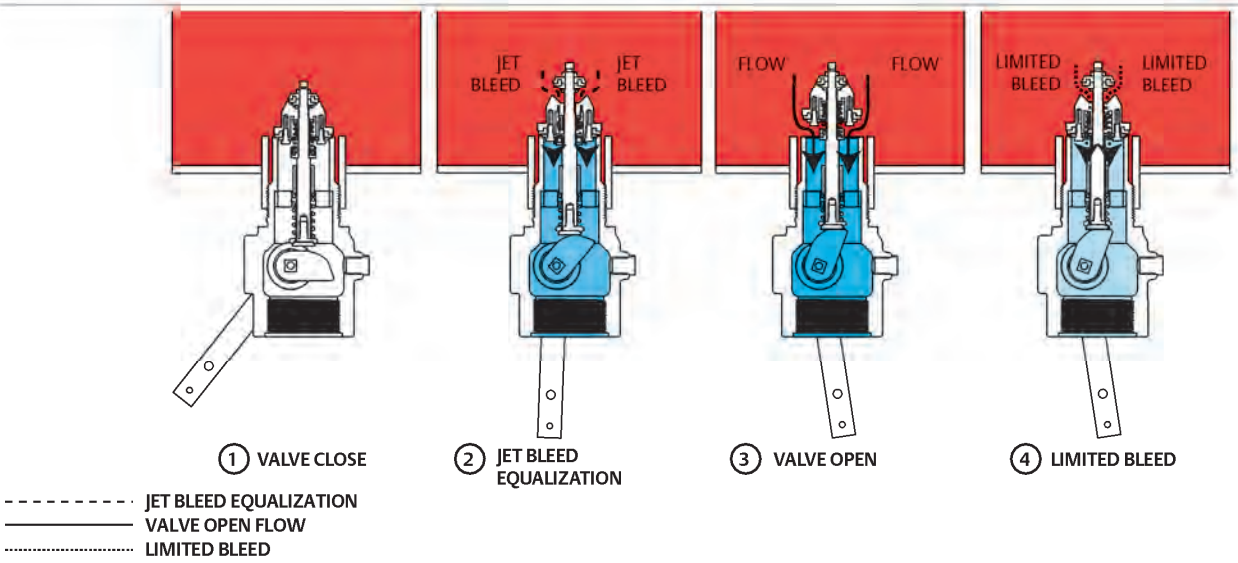

Fisher™ internal valves have gained wide field acceptance for use as primary shutoff valves, excess flow valves and back check valves[1]. Internal valves are installed in the inlets and outlets (liquid or vapor) of pressure vessels and in piping systems to control the flow of LPG and Anhydrous Ammonia (NH_3). The most frequent application is on bobtail and transport truck tanks, but they may also be used on large stationary storage tanks and on in-line installations. The valves can be used in conjunction with or without pumps and compressors.

Features and Benefits

- **Patented rapid equalization bleed area***—provides fast valve response for quick opening by moving the flow area away from the stem and allowing it to flow through the poppet. This not only increases flow rate, but also greatly improves valve cycle life which directly improves expected service life.
- **Unique Serviceability Features***—Removable gland packing, stainless trim parts and poppet designed with integral wrench flat for easy maintenance.
- **Durable Design**—Stainless poppet and stem* interface smoothly for a long wear life.
- **Excess Flow Closure**—Functions when flow exceeds the valves rated capacity or piping is sheared off at the valve.
- **Back Check Feature**—Allows reverse flow, fill with or without actuator device in valve open position.
- **Spring loaded PTFE stub shaft packing**
- **PTFE wear pads and Rulon® Bushings at critical wear points**
- **Manual, Cable or Air Open/Close Control**
- **Thermal Fusible links or plugs melt at 212 to 220°F / 100 to 104°C and allow valve closure in the event of a fire at the valve.**

Principle of Operation

The operational schematic below depicts threaded valves, however flanged styles operate in the same manner. For detailed information, refer to the Instruction Manual provided with the valve.

View #1
The valve is held closed by both tank pressure and the valve's closing spring. There is no leakage past the resilient seats in the poppet to the valve outlet.

View #2
The valve is opened by moving the operating lever to approximately midpoint in its 70° travel. This allows the cam to place the rapid equalization portion of the valve stem in the pilot opening, permitting a larger amount of product to bleed downstream than if the operating lever were moved to the full open position.

View #3
When tank and downstream pressure are nearly equal after a few seconds, the excess flow spring pushes open the main poppet and the operating lever can be moved to the full open position.

If tank pressure is greater than the valve's outlet pressure, the main poppet will remain in the closed position. If valve outlet piping is closed off by other valves, however, product bleeding through the pilot will increase until it nearly equals tank pressure and the main poppet opens. The main poppet will not open if valve outlet piping is not closed off so that the outlet pressure can approach tank pressure.

View #4
Once the main poppet opens, a flow greater than the valve's excess flow spring rating or a sufficient surge in flow forces the main poppet closed against the excess flow spring. The pilot valve allows a small amount of product to bleed, but much less than view # 2 where the rapid equalization portion of the stem is placed in the pilot opening. When the operating lever is moved to the closed position, the valve closes completely and seals tightly (view #1).

*Unique to the Jet Bleed Internal™ Valve Design only.
1. Because of the integral back check function of these valves, selective filling of manifold storage tanks requires the use of additional shutoff valves.

C407 SERIES

C477 SERIES

C471 SERIES

C486 SERIES

Threaded Internal Valves

Emerson offers the widest variety of threaded internal valves in the industry. While their most frequent use is in the liquid and vapor openings of bobtail and transport trucks, the valves can also be used in stationary storage tanks, complying with NFPA 58 requirements. Designed as primary shutoff valves, the units are designed with several features that help control product discharge.

All UL-listed internal valves are suitable for LPG or Anhydrous Ammonia (NH_3) service. Special construction is available for other compressed gases. All threaded internal valves have a compact, one-piece body design. They can be actuated manually, by cable control orwith an air cylinder.

C407-10 Series (1-1/4 in. / DN 32 Body Size) – An excellent valve for vapor return lines on bobtail trucks. Other applications include use as a main valve on small capacity pumping systems, Anhydrous Ammonia (NH_3)nurse tanks and in-line installations.

C477 Series (Straight-Through Body) – Available in 2 and 3 in. end connections. The most compact and economical unit in the Series, the C477 Series has one bottom outlet. The C477 Series can be used on bobtail, transport, stationary tank and in-line installations.

C471 Series (Tee Body) – Available in 2 and 3 in. end connections. This unit is designed with two outlets, bottom and side. The side outlet permits installing horizontal piping immediately adjacent to the tank without the need for extra pipe fittings. Either connection can be used for truck filling or withdrawal. The C471 Series is used primarily on bobtails and transport trucks.

C486 Series (Flange-by-NPT) – Available in 3 in. end connections. This unit was designed with an integrally cast inlet flange to quickly bolt to existing installations that historically required a valve to be threaded into a flange. Outlet is standard 3 in. FNPT.

UL® Approved C400 Series Internal Valves

CONNECTION INLET X OUTLET	TYPE		CLOSING FLOW (PROPANE)[2]				VAPOR CAPACITY (PROPANE)[2]				CLOSING FLOW (NH_3)[2]	
	Straight Body	Tee Body	Half Coupling		Full Coupling		25 psig / 1.7 bar Inlet		100 psig / 6.9 bar Inlet		Half Coupling	
			GPM	l/min	GPM	l/min	SCFH	SCMH	SCFH	SCMH	GPM	l/min
1-1/4 in. MNPT x 1-1/4 in. FNPT	C407-10-04	----	40	152	25	95	7400	210	12,700	360	36	136
	C407-10-05	----	50	189	35	133	9600	272	16,400	464	45	170
	C407-10-08[1]	----	80	303	65	246	15,800	447	27,600	781	72	272
2 in. MNPT x 2 in. FNPT	C477-16-10	C471-16-10	105	397	60	227	26,100	739	45,000	1274	95	360
	C477-16-15	C471-16-15	150	568	80	303	39,400	1116	69,000	1954	136	515
	C477-16-25	C471-16-25	250	946	130	492	----		----		227	859
3 in. MNPT x 3 in. FNPT	C477-24-16	C471-24-16	160	606	120	454	41,100	1164	71,000	2011	145	549
	C477-24-26	C471-24-26	265	1003	230	871	71,800	2033	127,000	3596	239	905
	C477-24-37	C471-24-37	375	1419	320	1211	99,000	2803	178,000	5040	339	1283
	C477-24-46	C471-24-46	460	1741	380	1438	----		----		415	1571
3 in. CL300 RF x 3 in. FNPT	C486-24-16	----	160	606	120	454	41,100	1164	71,000	2011	145	549
	C486-24-26	----	265	1003	230	871	71,800	2033	127,000	3596	240	908
	C486-24-37	----	375	1419	320	1211	99,000	2803	178,000	5040	340	1287
	C486-24-46	----	460	1741	380	1438	----		----		418	1582

NOTE: Includes a factory installed Type P340 / P341 latch.
1. LPG Vapor exceeds UL differential requirement of 15 psid / 1.03 bar d.
2. Closing Flows and Vapor Capacities listed are with valve in "bottom of tank" position. See product bulletins for additional data.

C800 Series Threaded Internal Valves

The Fisher™ C800 Series Internal Valves provide the same primary shutoff and excess flow protection as the C400 Series, but are offered in a wide variety of body materials and elastomeric seals. With industrial process installations spanning the globe, the C800 Series has been the trusted product line for decades.

Specifications

Emerson is the leader in special service conditions and offers a wide selection of metallic and elastomeric components to meet your demands. Every process or special service fluid has unique compatibility properties, pressure ranges and temperature ranges. Please contact your Fisher LPG Equipment distributor to help select the configuration that's best for you.

C800 Series Special Service Internal Valves

CONNECTION INLET X OUTLET	BODY STYLE	TYPE	BODY MATERIAL	ELASTOMER AVAILABLE PER ORDER[3]					
1-1/4 in. MNPT x 1-1/4 in. FNPT	Straight Body	C807-10	Steel	Fluorocarbon (FKM)	Nitrile (NBR)	PTFE	----	----	----
		C807S-10	SST						
2 in. MNPT x 2 in. FNPT	Tee Body	C871-16	Ductile Iron	EPDM	Viton®[1]	Kalrez®[2]	Neoprene (CR)	Nitrile (NBR)	PTFE
	Straight Body	C877-16	Ductile Iron						
		C887-16	Steel						
		C897-16	SST						
3 in. MNPT x 3 in. FNPT	Tee Body	C871-24	Ductile Iron						
	Straight Body	C877-24	Ductile Iron						
		C897-24	SST						
3 in. CL300 RF Flange x 3 in. FNPT	Straight Body	C886-24	Steel						

1. Viton® or Fluorocarbon (FKM) equivalent
2. Kalrez® or Perfluoroelastomer (FFKM) equivalent
3. Additional materials can be sourced upon request. Please contact your Fisher LPG Equipment Distributor for more information.

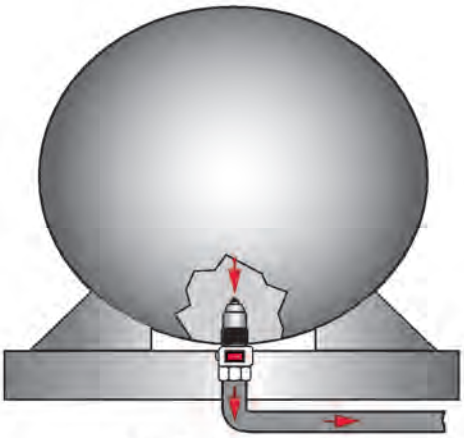

BOTTOM OF TANK POSITION
(VERTICAL DOWN)

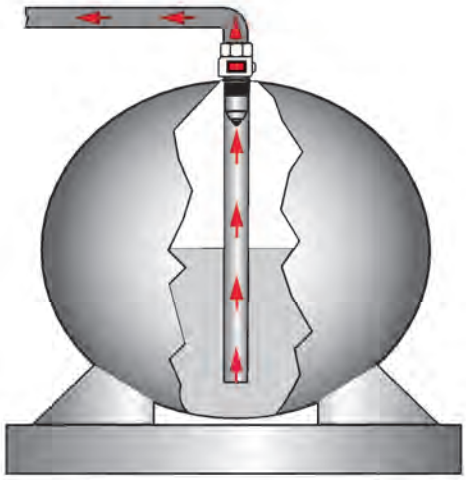

TOP OF TANK POSITION
(INVERTED UP)

INTERNAL VALVE TANK POSITIONS

HORIZONTAL POSITION
(REFER BELOW)

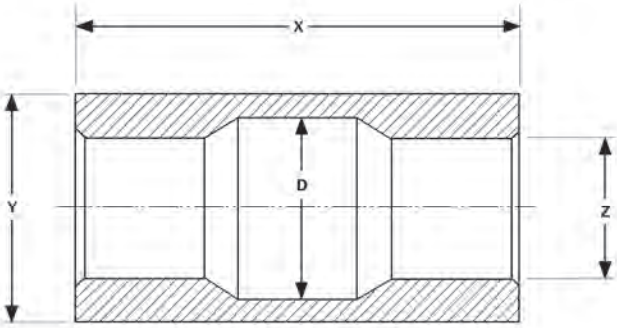

IN-LINE ADAPTOR

In-Line Adaptors (for reference only)*			
Z	DIMENSION, IN. / mm		
	X	Y	D
1-1/4 in. FNPT	4.70 / 119	2.75 / 70	2.05 / 52
2 in. FNPT	6.77 / 172	3.5 / 89	2.80 / 71
3 in. FNPT	7.53 / 191	4.5 / 114	3.80 / 97

* Not for sale.

Threaded Valve Specifications

Pressure Rating: 400 psig / 27.6 bar WOG
Temperature[1]: C470 Series:-20 to 150°F / -29 to 66°C
C800 Series: Contact your Fisher™ LPG Distributor for details
Body: C470 Series: Ductile Iron
C407-10 Series: Cast Steel
C800 Series: Ductile Iron, Steel, SST
Packing: PTFE
Seat Discs: C407-10 and C470 Series: Molded, synthetic rubber
C800 Series: Contact your local LPG Distributor for details
Stub Shaft and Stem: Stainless steel

WARNING

A line break downstream of a pump may not actuate the excess flow valve. If any break occurs in the system or if the excess flow valve closes, the system should be shutdown immediately.

DO NOT USE the excess flow function incorporated into Fisher C Series internal valves or F Series excess flow valves to satisfy the passive shutdown requirement in 49CFR§173.315(n)(2). DO NOT include the excess flow incorporated into Fisher C Series internal valves or F Series excess flow valves in a DCE certification under 49CFR§173.315(n)(2). The cargo tank manufacturer must install some other equipment that satisfies the requirement for passive shutdown capability under 49CFR§173.315(n)(2).

Failure to follow this warning could result in serious personal injury or property damage from fire or explosion in the event of an unintentional release of product during an unload operation.

Type C477/471-24 "Bottom of Tank" Position Flow Curve, Half Coupling

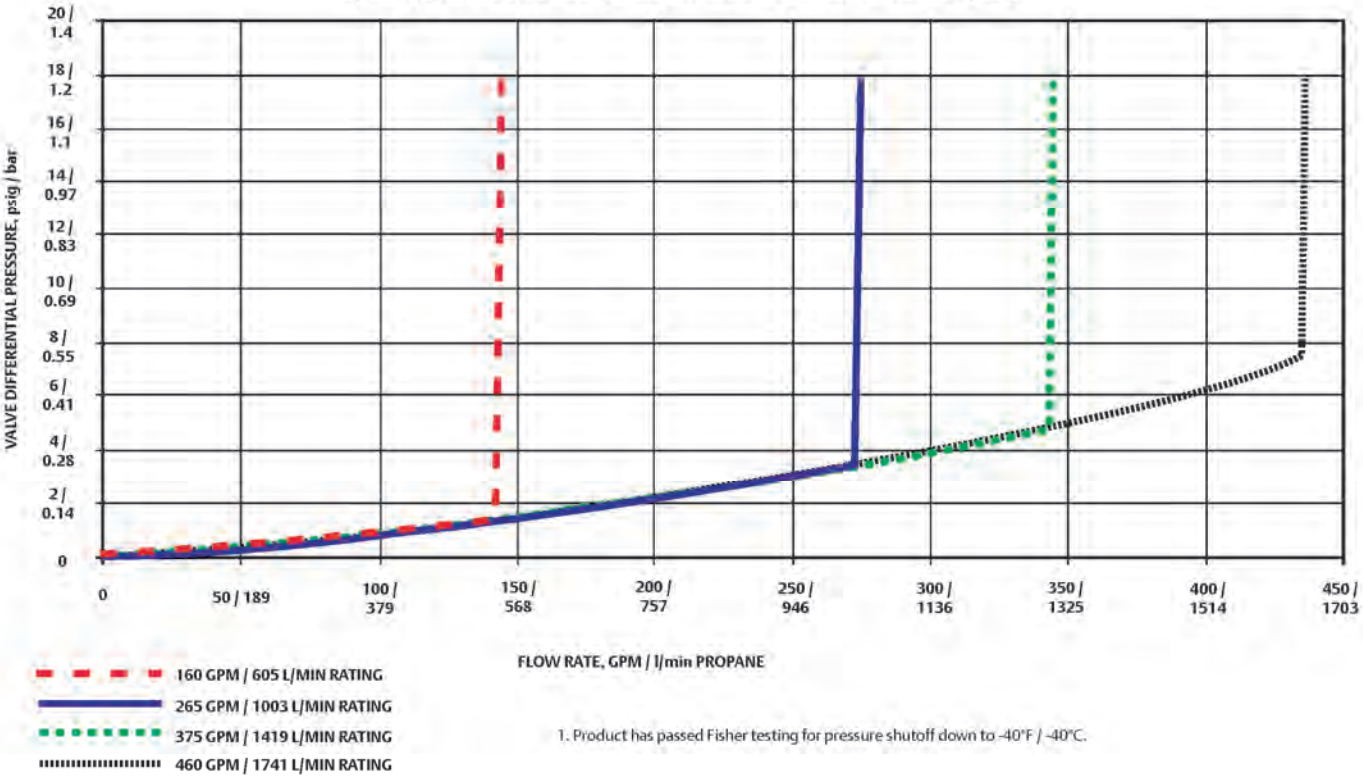

1. Product has passed Fisher testing for pressure shutoff down to -40°F / -40°C.

Type C477/471-16 "Bottom of Tank" Position Flow Curve, Half Coupling

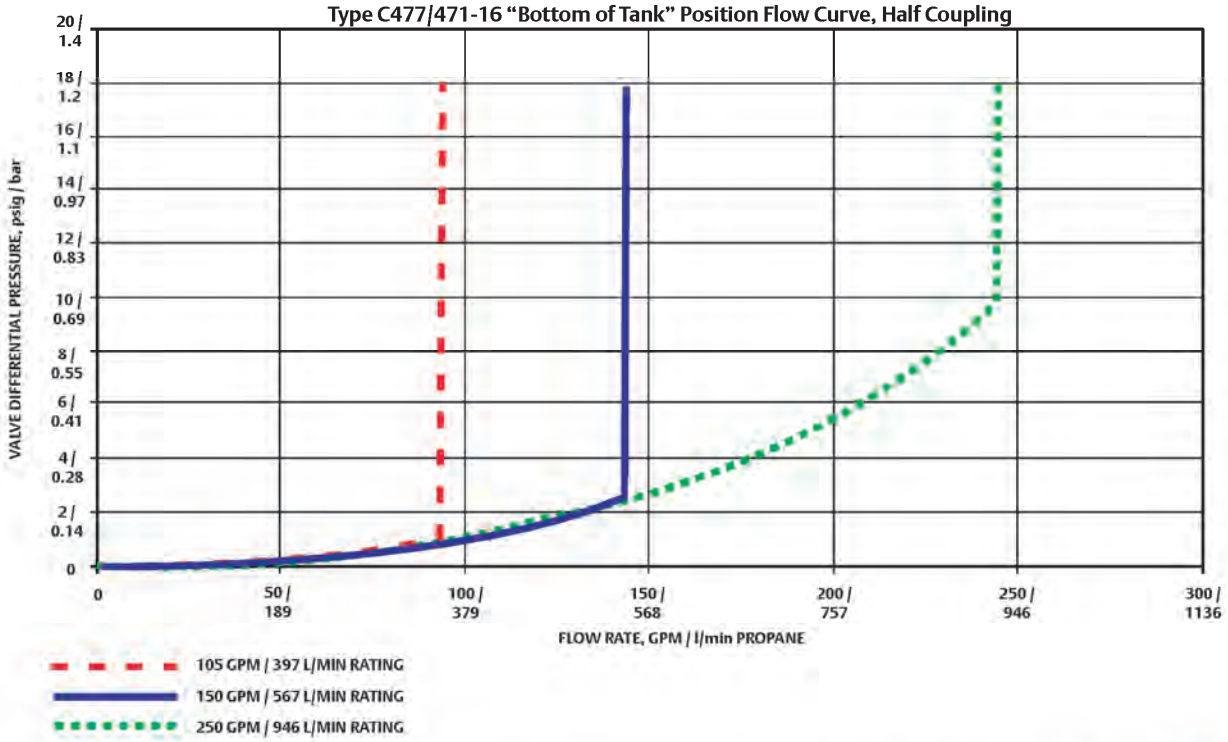

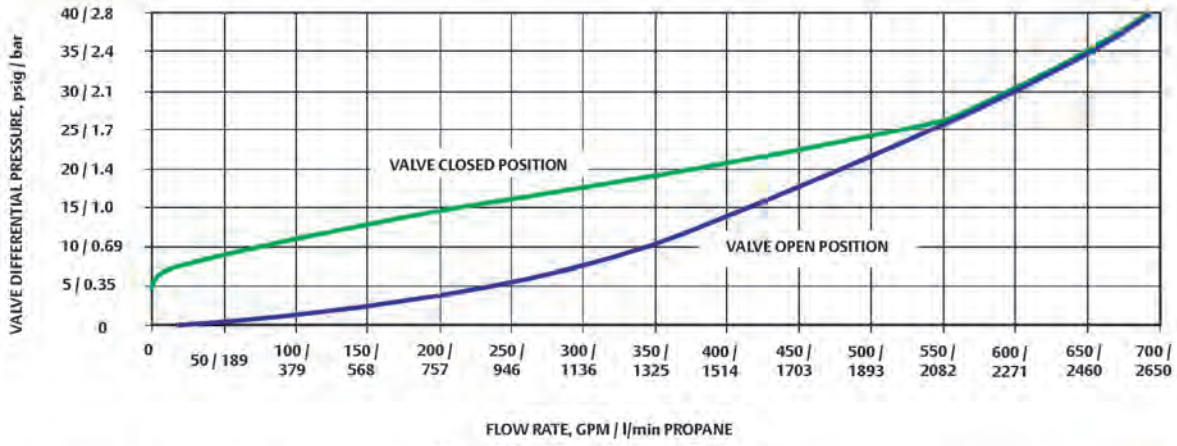

Type C477-24 Typical Reverse Flow Curve

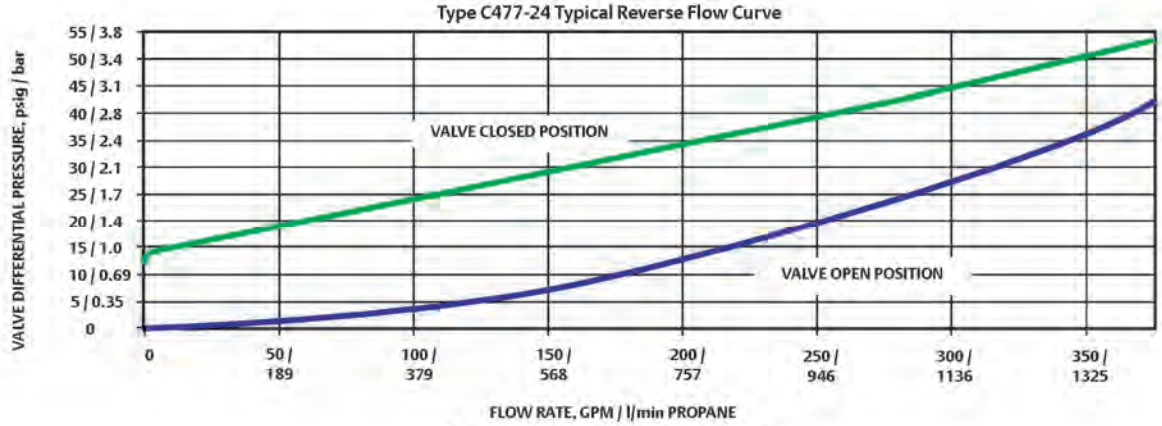

Type C477-16 Typical Reverse Flow Curve

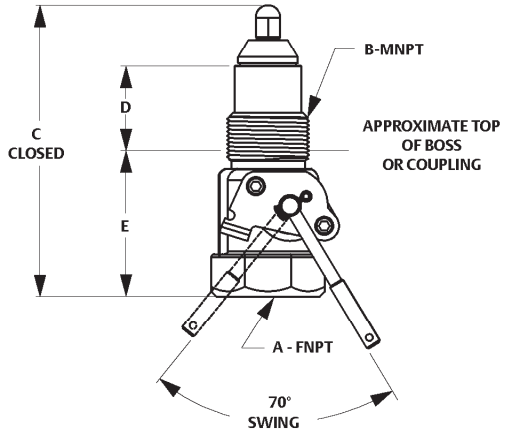

C407-10 AND C807-10 SERIES

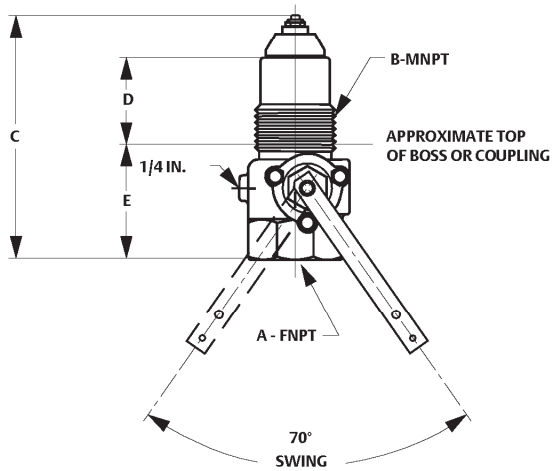

C477, C877 AND C897 SERIES

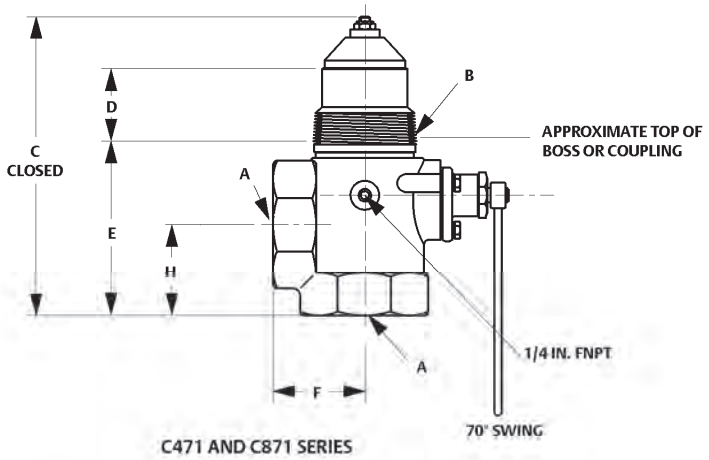

C471 AND C871 SERIES

UL® Approved C400 Series Internal Valves								
TYPE	A, IN. (FNPT)	B, IN. (MNPT)	DIMENSION, IN. / mm					INSTALLATION CLEARANCE DIAMETER, IN. / mm
			C	D	E	F	H	
C407-10	1.25	1.25	5.90 / 150	1.86 / 47	2.88 / 73	----	----	5.00 / 127
C471-16	2	2	8.07 / 205	2.40 / 61	4.05 / 103	2.76 / 70	2.66 / 68	10.00 / 254
C471-24	3	3	9.00 / 229	2.60 / 66	4.57 / 116	3.25 / 83	3.26 / 83	13.38 / 340
C477-16	2	2	8.07 / 205	2.40 / 61	4.05 / 103	----	----	10.00 / 254
C477-24	3	3	9.00 / 229	2.60 / 66	4.57 / 116	----	----	13.38 / 340

Threaded Body Outlet Design and Size	
TYPE	WRENCH SIZE, IN.
C407-10	2-5/16 Octagon
C471-16 and C477-16	3-1/4 Octagon
C471-24, C477-24 and C486-24	4-1/2 Octagon

TYPE C483-24

TYPE C484-24

Flanged Internal Valves

Flanged valves provide a sturdy and compact means of directly mounting a pump or piping connection. Special stud bolts, weakened with a groove on the outside diameter, are furnished with the valves to permit the pump or piping to shear off in the event of an accident, leaving the valve intact. A built-in excess flow valve reduces the chance of uncontrolled product discharge when flow exceeds the rated flow capacity.

All flanged valves have an internal screen for pump protection that can be easily removed if the valve is used primarily for filling the tank. They also contain PTFE packing to resist stub shaft leakage. These valves can be activated manually, by cable control or by air cylinder (refer to pages 60 and 61).

3 in. / DN 80 Flanged Sizes

Type C484-24 – A single-flange unit widely used on bobtail and transport trucks for a compact means of direct pump connection to the valve outlet. Another application for the Type C484-24 is on in-line installations.

Type C483-24 – A double-flange unit designed for special bobtail truck applications where the pump must be lowered to clear the truck frame or other obstacles. A special shear section in the body permits the lower section of the valve to shear off in the event of an accident, leaving the critical shutoff parts within the tank.

UL® Approved 3 In. / DN 80 Flanged Internal Valves

Size	Type Number		Closing Flow Propane								Closing Flow NH_3			
	Single Flanged	Double Flanged	Single Flanged, Bottom of Tank Position*		Double Flanged, Bottom of Tank Position*		Single Flanged, Top of Tank Position*		Double Flanged, Top of Tank Position*		Single Flanged, Bottom of Tank Position*		Double Flanged, Bottom of Tank Position*	
			GPM	l/min	GPM	l/min	GPM	l/min	GPM	l/min	GPM	l/min	GPM	l/min
3 in. / DN 80	C484-24-16	C483-24-16	160	606	160	606	180	681	180	681	144	545	144	545
	C484-24-25	C483-24-26	250	946	265	1003	250	946	290	1098	239	905	226	855
	C484-24-40	C483-24-40	400	1514	400	1514	400	1514	400	1514	361	1366	361	1366

*See Internal Valve Flow Positions (page 49) for description of Bottom of Tank, Top of Tank and Horizontal Flow Positions.

UL Approved 3 In. / DN 80 Flanged Internal Valves

Size	Type		Vapor Capacity Propane							
	Single Flanged	Double Flanged	100 psig / 6.9 bar Inlet, Single Flanged, Bottom of Tank Position**		100 psig / 6.9 bar Inlet, Double Flanged, Bottom of Tank Position**		100 psig / 6.9 bar Inlet, Single Flanged, Top of Tank Position*		100 psig / 6.9 bar Inlet, Double Flanged, Top of Tank Position*	
			SCFH	SCMH	SCFH	SCMH	SCFH	SCMH	SCFH	SCMH
3 in. / DN 80	C484-24-16	C483-24-16	71,000	2011	71,000	2011	96,000	2718	96,000	2718
	C484-24-25	C483-24-26	NOT LISTED		127,000	3568	NOT LISTED		148,000	4191
	C484-24-40	C483-24-40	181,000	5125	181,000	5125	190,000	5380	190,000	5380

*See Internal Valve Flow Positions (page 49) for description of Bottom of Tank, Top of Tank and Horizontal Flow Positions.

Flanged Valve Specifications

Pressure Rating: 400 psig / 27.6 bar WOG
Temperature: Types C483 and C484[1]: -20 to 150°F / -29 to 66°C
Type C404-32[2]: -20 to 150°F / -29 to 66°C
Body: Types C483 and C484-24: Cast steel and WCC
Type C404-32: Stainless steel
Packing: PTFE
Seat Discs: Molded, synthetic rubber
Stub Shaft and Stem: Stainless steel
Gaskets: Non-asbestos spiral wound graphite

WARNING

A line break downstream of a pump may not actuate the excess flow valve. If any break occurs in the system or if the excess flow valve closes, the system should be shutdown immediately.

DO NOT USE the excess flow function incorporated into Fisher™ C Series internal valves or F Series excess flow valves to satisfy the passive shutdown requirement in 49CFR§173.315(n)(2). DO NOT include the excess flow incorporated into Fisher C Series internal valves or F Series excess flow valves in a DCE certification under 49CFR§173.315(n)(2). The cargo tank manufacturer must install some other equipment that satisfies the requirement for passive shutdown capability under 49CFR§173.315(n)(2).

Failure to follow this warning could result in serious personal injury or property damage from fire or explosion in the event of an unintentional release of product during an unload operation.

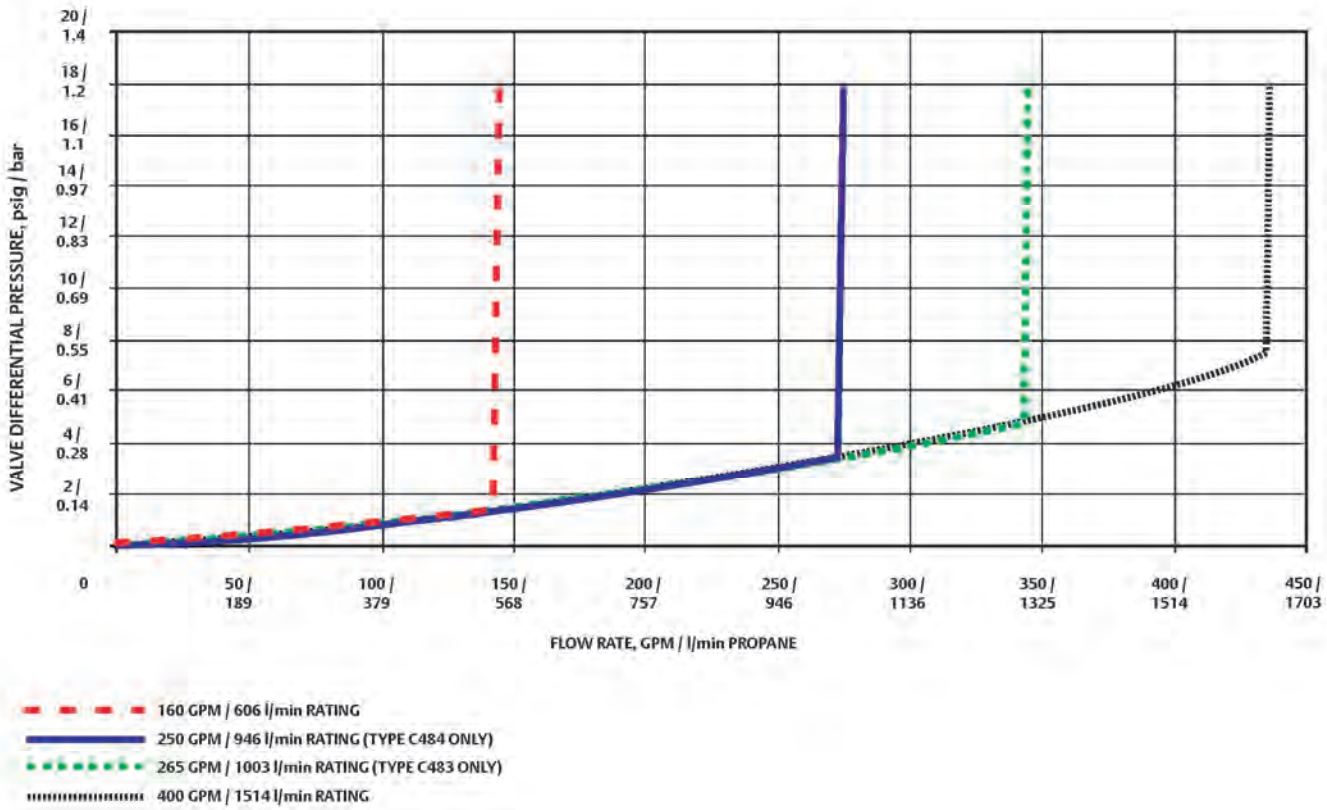

1. Product has passed Fisher testing for pressure shutoff down to -40°F / -40°C.
2. Product has passed Fisher testing for pressure shutoff down to -50°F / -45°C.

TYPE C404-32

TYPE C404A32 WITH P614A ACTUATOR

TYPE C404M32 WITH P313 HANDLE ASSEMBLY

4 in. / DN 100 Flanged Size (Stainless Steel Construction)

Type C404-32 – Used widely on transport trucks and large storage tanks, the 4 in. / DN 100 flanged unit comes standard with all stainless steel construction for maximum protection against rust and corrosion. For easy field maintenance, the seat ring is field replaceable.

The Type C404-32 is the only internal valve that cannot be opened and closed by the Type P650 cable control (refer to page 60).

Factory installation of an air cylinder or manual operating handle (with remote release mechanism) is available on the 4 in. / DN 100 flanged valves. Refer to ordering information below.

UL® Approved 4 in. / DN 100 Flanged Internal Valves

TYPE[1]			INLET, IN. / DN	OUTLET, IN. / DN	CLOSING FLOW, GPM / l/min PROPANE[2]	VAPOR CAPACITY, SCFH / SCMH PROPANE	
Cable	Air	Manual				25 psig / 1.7 bar Inlet	100 psig / 6.9 bar Inlet
C404-32-34	C404A 32-34	C404M 32-34	4 / 100 CL300 ASME RF Modified 5-7/8 / 149 mm diameter bore	4 / 100 CL300 ASME RF	340 / 1287	61,600 / 1745	104,800 / 2968
C404-32-40	C404A 32-40	C404M 32-40			400 / 1514	63,900 / 1810	108,600 / 3076
C404-32-60	C404A 32-60	C404M 32-60			600 / 2271	83,200 / 2356	141,500 / 4007
C404-32-80	C404A 32-80	C404M 32-80			800 / 3028	259,600 / 7352	356,200 / 10,088
C404-32-100	C404A 32-100	C404M 32-100			1000 / 3785	----	----

1. 4 in. / DN 100 size available in single flange only.
2. Closing flow vertical down.

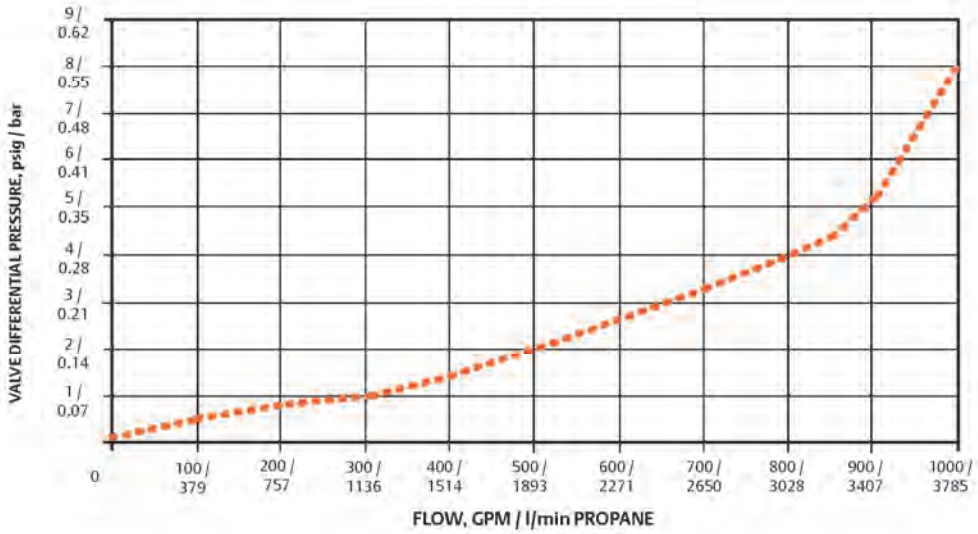

TYPE C404-32 CAPACITY CURVE

TYPE C883-24

TYPE C884-24

TYPE C891

TYPE C804-32

TYPE C804A-32

TYPE C804M-32

C800 Series Flanged Internal Valves

The Fisher™ C800 Series Flanged Internal Valves provide the same primary shutoff and excess flow protection as the C400 Series, but are offered in a wide variety elastomeric seals. With industrial process installations spanning the globe, the robust flanged C800 Series has been the trusted product line for decades.

Type C804H-32 for Y-Grade: designed with a new formulated seal to withstand corrosive effects in Y-Grade natural gas liquid (NGL) applications. Retrofit kit available for Type C404-32: RC404YGT012.

Specifications

Emerson is the leader in special service conditions and offers a wide selection of metallic and elastomeric components to meet your demands. Every process or special service fluid has unique compatibility properties, pressure ranges and temperature ranges. Please contact your Fisher LPG Equipment distributor to help select the configuration that's best for you.

C800 Series Special Service Internal Valves

CONNECTION INLET X OUTLET	BODY STYLE	TYPE	BODY MATERIAL	ELASTOMERS AVAILABLE FOR ORDER[3]					
2 in. CL300 RF	Tee Body	C891-16	SST	EPDM	Viton®[1]	Kalrez®[2]	Neoprene (CR)	Nitrile (NBR)	PTFE
3 in. CL300 RF	Tee Body	C891-24							
3 in. Mod. CL300 RF Fange x 3 in. CL300 RF Flange	Double Flange	C883-24	Steel						
	Single Flange	C884-24							
4 in. Mod. CL300 RF Flange x 4 in. CL300 RF Flange	Single Flange	C804-32	SST	Viton®[1]	PTFE	Y-Grade NGL[6]	Nitrile (NBR)	----	----
		C804A-32[4]							
		C804M-32[5]							

1. Viton® or Fluorocarbon (FKM) equivalent
2. Kalrez® or Perfluoroelastomer (FFKM) equivalent
3. Additional materials can be sourced upon request. Please contact your Fisher LPG Equipment Distributor for more information.
4. Air Actuation.
5. Manual.
6. Available as Types C804H32, C804HA32 and C804HM32.

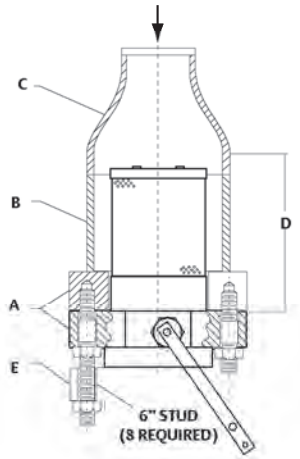

In-Line Piping				
A	DIMENSION, IN. / mm			OUTLET
	B	C	D	E
ASME CL300 RF Flange	Pipe Size	Reducer	Minimum	ASME CL300 RF Flange
3 in. / DN 80	6 / 152	6 x 3 / 152 x 76	7.9 / 201	3 in. / DN 80
4 in. / DN 100	8 / 203	8 x 4 / 203 x 102	11.5 / 292	4 in. / DN 100

Studding Outlet (modified flange)

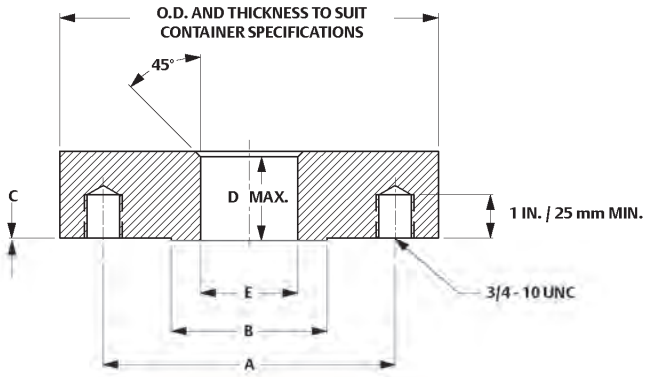

Tank Connections									
MODIFIED CL300 ASME RF FLANGE	DIMENSION, IN. / mm								MATING FLANGE O.D., IN. / mm
	A			B RF	C RF	D	E (Modified)[1]		
	DBC	No.	Size						
3 in. / DN 80	6.62	8	0.75	5.75 / 146	0.06 / 1.5	1.50 / 38	4.62 / 117		8.25 / 210
4 in. / DN 100	7.88	8	0.75	7.00 / 178	0.06 / 1.5	1.56 / 40	5.88 / 149		10.00 / 254

1. Can be increased up to 4.81 in. / 122 mm for 3 in. valve and 6.19 in. / 157 mm for 4 in. valve, if valve and gasket are centered with modified flange opening.

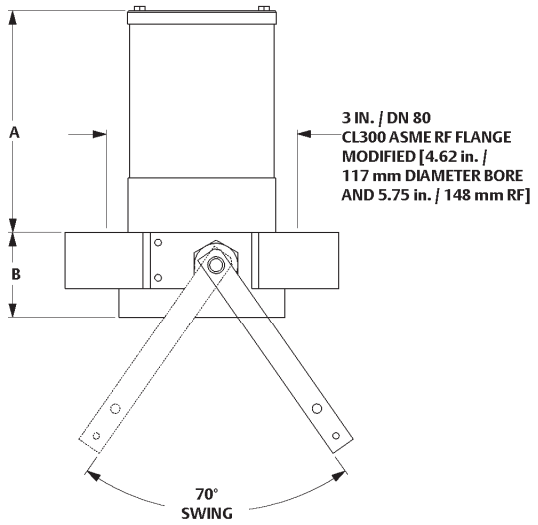

TYPES C484-24 AND C884-24

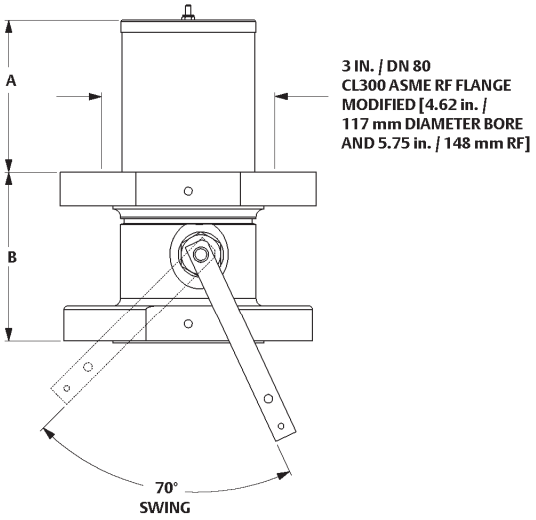

TYPES C483-24 AND C883-24

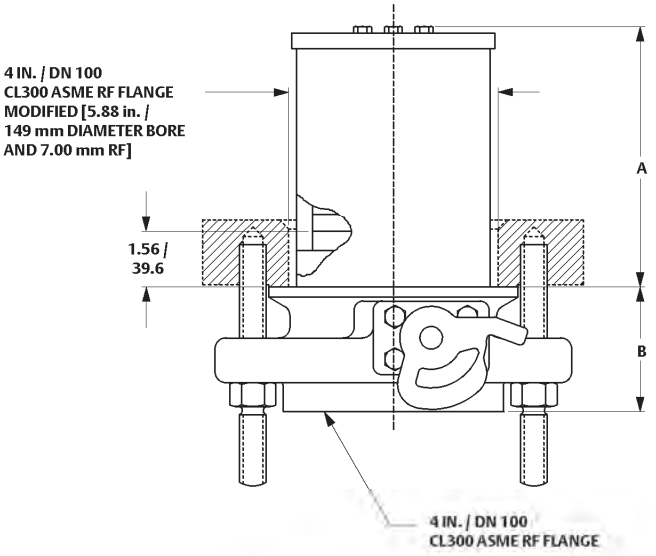

TYPES C404-32 AND C804-32

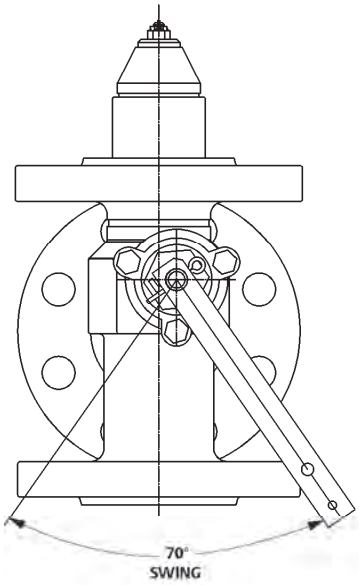

TYPE C891

Flanged Valves			
TYPE	TANK CONNECTION, IN. / DN	DIMENSION, IN. / mm	
		A	B
C484-24	3 / 80 CL300 RF Flange	6.75 / 171	2.56 / 65
C483-24	3 / 80 CL300 RF Flange	5.33 / 135	5.62 / 143
C404-32	4 / 100 CL300 RF Flange	7.55 / 192	3.48 / 88

Air Interlock Systems

An air interlock system can be configured for transport and bobtail trucks with air brakes by using air cylinder actuated internal valves. This system simultaneously interlocks the internal operation with the truck air brakes without affecting normal air brake operation. It complies with DOT MC331 and NFPA 58 requirements regarding thermal and remote release feasibility.

The air interlock system permits the air brakes to set before the internal valve opens – even if the truck operator forgets to set the brakes. The brakes cannot be released until the internal valve is closed.

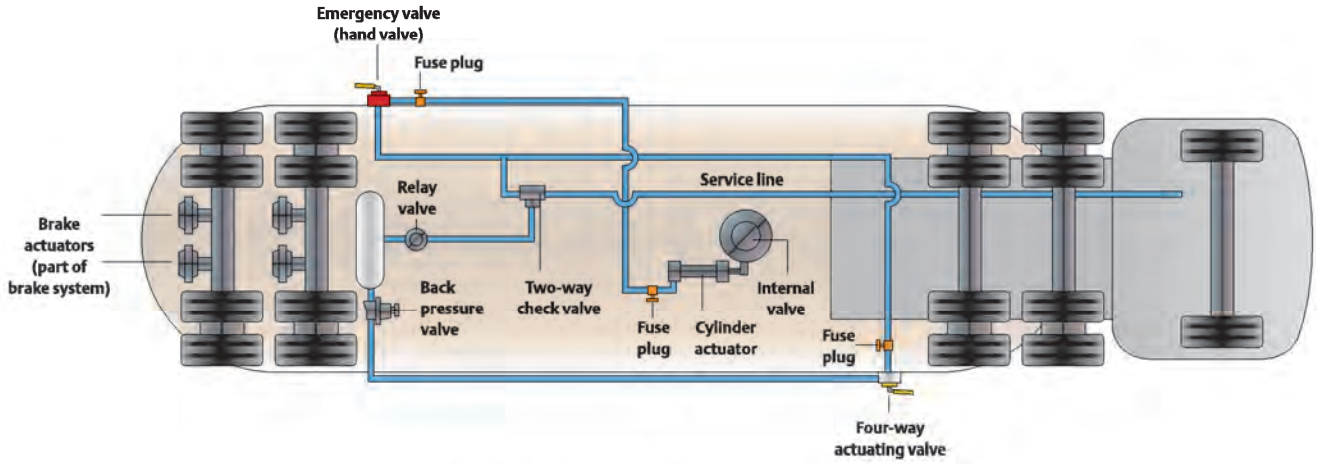

AIR INTERLOCK HOOK-UP ON TRANSPORT TRUCK

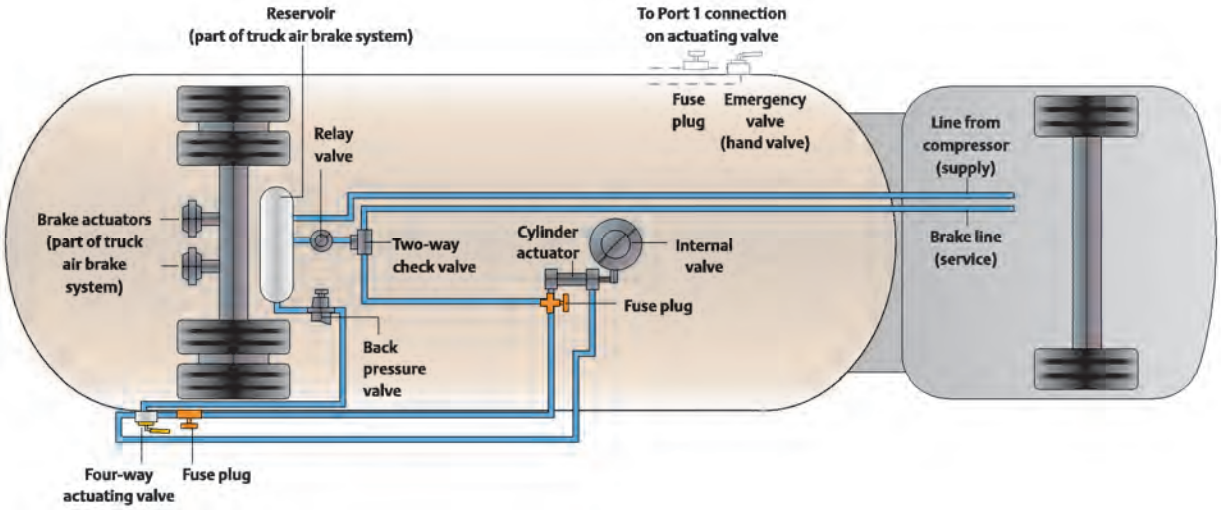

AIR INTERLOCK HOOK-UP ON BOBTAIL TRUCK


TYPE P163A


TYPE P650


TYPE P341


TYPE P340


TYPE P164C


TYPE P315


TYPE P313

Cable Controls

Fisher™ cable controls and accessories can be furnished to remotely open and close all internal valves except the 4 in. / DN 100 flanged size. This equipment can be used to comply with NFPA 58 and DOT requirements for MC331 cargo tanks.

Cable systems can also be used on stationary storage tanks at bulk plants and on in-line applications to increase safety during transfer operations. All fusible elements and links used in the cable control systems comply with NFPA 58 and MC331 requirements.

Type P650 or P651 Primary Cable Control – Capable of actuating all Fisher internal valves except the 4 in. / DN 100 Type C404-32, the Type P650 or P651 opens and closes the valve from a remote point, usually the rear of the bobtail or transport. Pulling the handle of the primary control opens the internal valve; pushing the handle closes the valve. There are three notches on the primary control that give a travel of 4, 5 or 6 in. / 102, 127 or 152 mm depending upon the travel required by the valve's operating lever.

Included with each Type P650 primary control is a 20-foot / 6.1 m cable, Type P134 fusible links, a return spring and mounting hardware. If just the primary cable control is needed, order Type P651, which is available without any of the other accessories.

Type P163A or P164A Auxiliary Remote Release – These units allow the internal valve to be closed from a location other than the primary control point (Type P650 or P651). Pulling the auxiliary release handle trips the release mechanism on the primary control to close the internal valve.

The two assemblies are identical except for the length. Type P163A has an untrimmed length of 25 feet / 7.6 m and Type P164A has an untrimmed length of 50 feet / 15.2 m. Both cables can be trimmed to any length. Both releases can be installed through mounting brackets up to 3/8 in. / 9.5 mm thick.

Type P164B – a release assembly that uses 50 feet / 15 m of cable housing which does not require elaborate guiding like uncovered cables.

Type P164C – an Auxiliary Remote Release without cable is also available.

Latch/Remote Release Mechanisms

With the exception of the 3 in. / DN 80 flanged sizes, all Fisher internal valves can be fitted with a manual latch/remote release mechanism. When the internal valve's operating lever is manually moved to the open position, the lever can be latched in the open position. The lever can be released from a remote location by pulling on the cable attached to a pull ring, thus closing the internal valve. A built-in fusible element in the latch/release melts if exposed to fire allowing the operating lever to return to the closed position.

Type P340 – Fits all 2 and 3 in. NPT internal valves (Types C471 and C477). Type P340 is easily installed in the field by removing two of the three gland cap screws.

Type P341 – Fits 1-1/4 in. NPT C407 Series internal valves. Also available factory installed, Type C407M10.

Type P342 – Bi-directional latch/remote release for the 1-1/4 in. NPT C407-10 Series allows operation from two directions.

Type P313 – Fits 4 in. / DN 100 Type C404-32 internal valves. Also available factory installed, Type C404M32. The Type P315 remote release should be used with this release.

Type P314 – This cable assembly is used as an attachment from the Type C404-32 operating lever to the primary cable control. The assembly includes a 40-foot / 12.2 m cable, a special bushing with a fusible element and clamp. The bushing fits in the valve-operating lever and has a built-in fusible element that will melt if exposed to fire, allowing the Type C404-32 to close. The cable connects to the bushing and the clamp permits the other end of the cable to be attached to the fusible link (not furnished) at the primary cable control.

Type P315 – On manually actuated 4 in. / DN 100 valves (Type C404M32), Type P315 remote handle release can be used to close the internal valve from a remote location. Cable linkage (30 feet / 9.1 m) and mounting hardware are included.

Internal Valve Accessories

INTERNAL VALVE SIZE, IN. / DN	PRIMARY CABLE CONTROL	AUXILIARY REMOTE RELEASE	CABLE ASSEMBLY	LATCH/RELEASE MECHANISM
1-1/4, 2 and 3 / 32, 50 and 80 (NPT or Flanged)	Type P650 or P651[1]	Type P163A or P164A	Included with Type P650	Type P341, P342 (C407-10 Series) or Type P340 (C400 Series)
4 / 100 Flanged	Use Allegheny or Wheaton Control	Type P315	Type P314	Type P313[2]

1. Type P651 is a primary control only, no accessories.
2. Use with Type P315 remote release mechanism.

TYPE P389

TYPE P613

TYPE P623

TYPE P639A

TYPE P614A

TYPE P731

TYPE P713

TYPE P723

TYPE P739

TYPE P714

NOTE: INTERNAL VALVES SHOWN ARE NOT INCLUDED.

P Series Pneumatic Actuators

All Fisher™ internal valves can be ordered with a pneumatic actuators that permits the valve to be opened and closed from a remote location. Two styles of pneumatic actuators are available: P600 Series 'Brake Chamber' style actuators and P700 Series 'Rotary' style rack-and-pinion actuators. For the P600 Series when air pressure is applied to the actuator, it moves the actuator's rod and internal valve operating lever to the open position. Upon loss of air pressure, the valve's operating lever returns to the closed position. For the P700 Series, when air pressure is applied to the actuator, pistons act on a gear assembly that rotates the internal valve lever to the open position. Upon loss of air pressure, the valve will return to the closed position. Besides air pressure, nitrogen or carbon dioxide can also be used to pressure the actuators. In addition, the P700 Series supply source can be propane vapor.

Use of a pneumatic actuator permits the opening and closing of the internal valve to be tied into the air brake of the transport or bobtail. Pneumatic Actuators can also provide a convenient way to remotely operate a number of internal valves on stationary storage tanks at bulk plants.

Type P389 (1-1/4 in. / DN 32 Size) – This actuator can only be used with the C407-10 Series valve. All necessary hardware for installing the actuator is included. Minimum pressure is 60 psig / 4.1 bar; maximum pressure is 250 psig / 17.2 bar. Fuse Plug Part Number T1140399982 ordered separately.[1]

Types P613, P623, P639A and P614A Brake Chamber Actuators – The actuator attaches directly to the valve after removal of the cable-operating lever. Included in each assembly is an operating lever and appropriate mounting hardware specific to each respective valve.

These actuators can only be used with the internal valves as specified on the table below.

Types P731, P713, P714, P723 and P739 Rotary Actuators – The actuator attaches directly to the valve after removal of the cable-operating lever. Included in each assembly is an operating lever and appropriate mounting hardware specific to each respective valve in addition to air pressure, nitrogen and carbon dioxide, the P700 Series can be actuated with propane vapor.

Fuse Plugs – When installed in the actuator piping at the valve, will allow the pneumatic pressure to vent closing the valve if the plug is exposed to temperature between 208 to 220°F / 98 to 104°C. Fuse plugs are available in two sizes, 1/8 in. NPT (T1140399982) and 1/4 in. NPT (T1033699982). Fuse Plugs come with all Types P600 and P700 actuators, EXCEPT Type P389. Part Number T1140399982 to be ordered separately.[1]

Pneumatic Actuators Ordering Information

INTERNAL VALVE TYPE	BRAKE CHAMBER STYLE PNEUMATIC ACTUATOR		ROTARY STYLE PNEUMATIC ACTUATOR	
	Type	Supply Pressure Range, psig / bar	Type	Supply Pressure Range, psig / bar
C407-10	P389[1]	60 to 250 / 4.1 to 17.2	P731	50 to 125 / 3.5 to 8.6
C484-24	P613	20 to 125 / 1.4 to 8.6	P713	25 to 125 / 1.7 to 8.6
C483-24	P623	20 to 125 / 1.4 to 8.6	P723	25 to 125 / 1.7 to 8.6
C471 and C477 (2 and 3 in. NPT Sizes)	P639A	20 to 125 / 1.4 to 8.6	P739	25 to 125 / 1.7 to 8.6
C404-32	P614A	40 to 125 / 2.8 to 8.6	P714	40 to 125 / 2.8 to 8.6

1. Fuse Plug Part Number T1140399982 must be ordered separately.

Emergency Shutoff Valves - Bulk Plants

Valves

FISHER

TYPE N551 (VALVE CLOSED)

TYPE N551 WITH TYPE P327D

TYPE N551 WITH TYPE P539A

Snappy Joe™ Emergency Shutoff Valves for Bulk Plants

Snappy Joe **Type N551** Emergency Shutoff Valves (ESVs) are designed for in-line installations, usually near a bulkhead. The valves provide a means of shutting off gas in the event of a hose rupture or piping break at the transfer area to avoid a large scale loss of LPG or Anhydrous Ammonia (NH_3).

The valves can be manually opened and closed at the installed location or closed remotely by either cable or air. A remote operating actuator is also available.

High Flow Capacity – The main poppet moves completely out of the flow stream for extremely low restriction-to-flow.

Operational Ease – Moving the operating lever to the vertical position opens the valve, making it simple to tell if the unit is open or closed. A pilot valve in the poppet opens as the lever is moved upward to pressurize the hose. Once equalized, the poppet moves quickly to the open position.

The valve is closed by simply pushing the lever down without first having to trip a latch. The operating lever is easily reached from across a bulkhead. All sizes look similar and operate exactly the same, an important point in an emergency situation.

Fusible Element – The fusible element is located at the hub of the operating lever and stub shaft. When exposed to fire, the element melts allowing the stub shaft to turn. The poppet then moves to the closed position, even if the operating lever has been wired open.

Rugged Construction – Heavy duty construction makes Snappy Joe ESVs suitable for use as a "working" shutoff valve for the transfer area, even under frequent use. The internal closing spring is protected from the elements and tampering. All seats and seals use UL®-approved materials rated for -40°F / -40°C and have metal back-up seals for extended fire resistance. The valves are rated 400 psig / 27.6 bar WOG.

Ease of Service – Serviceable without removal from the pipeline. Parts that wear are external and can be changed out in a matter of minutes. The packing can be changed with the valve in-line.

Cable Release – Standard valves are fitted with a release mechanism for cable attachment. A cable connected to the wire loop allows closure from a safe remote location, such as the bulk plant entrance.

While the ordinary cable can be used, the **Type P164B** release assembly is available. This assembly uses 50 feet / 15 m of cable housing which does not require elaborate guiding like uncovered cables.

Pneumatic Operation – Remote pneumatic closure is available with **Type P327D** release. Depending upon valve inlet pressure, a minimum supply pressure of 30 to 70 psig / 2.1 to 4.8 bar on the Type P327D allows the valve to be latched in the open position with manual closure possible at the valve. Loss of supply pressure to the cylinder permits the ESV to close. Air, nitrogen or CO_2 can be used for the cylinder supply source. Maximum inlet pressure to the cylinder is 125 psig / 8.6 bar. Operating Temperature Rating = -40 to 160°F / -40 to 71°C.

Type P539A pneumatic actuator permits opening and closing Fisher™ N551 Series Snappy Joe emergency shutoff valves (ESVs) both at the valve with the use of a pneumatic 4-way valve and from a remote location. The actuator opens the valve when pressure is applied. Minimum pressure is 20 psig / 1.4 bar and maximum pressure is 30 psig / 2.1 bar.

Upon loss of pressure, the N551 Series closes, assisted by the spring in the pneumatic actuator.

Type N851 for Special Service

The Type N551 can be ordered with alternate elastomer compounds for various industrial process applications. The **Type N851K** is assembled with FFKM (Kalrez® or equivalent) and can be used in a variety of fluid services. Other materials may be available. Contact your local Fisher LPG Distributor for more details.

N550 SERIES ACCESSORIES

FISHER

P551 AND P551A

External Closing Spring. Can be installed on an N550 to increase closing force.

T13500 FUSE LINK SUB-ASSEMBLY

P134 FUSIBLE LINK

FISHER

P327D

For pneumatic remote shutoff of N550 valves. Air supply of 20 to 70 psig keeps valves open. The valve will close by air shutoff, by bleed, or by line rupture. Numerous valves may be in one line. Replaces standard T12979 Latch Block Assembly that is manually operated.

AIR TUBING IS NOT INCLUDED IN KIT.

Emergency Shutoff Valves - Bulk Plants

Valves

Emergency Shutoff Valves				
TYPE	BODY SIZE, IN.	FLOW IN GPM / l/min PROPANE		ACCESSORIES
		1 psid / 69 mbar d	2 psid / 0.14 bar d	
N551-10	1-1/4 FNPT	110 / 416	150 / 568	Type P1648 Cable Release Type P327D Pneumatic Release Type P539A Pneumatic Actuator
N551-16	2 FNPT	190 / 719	295 / 1117	
N551-24	3 FNPT	580 / 2195	850 / 3127	

TYPE N551 CAPACITY CURVE

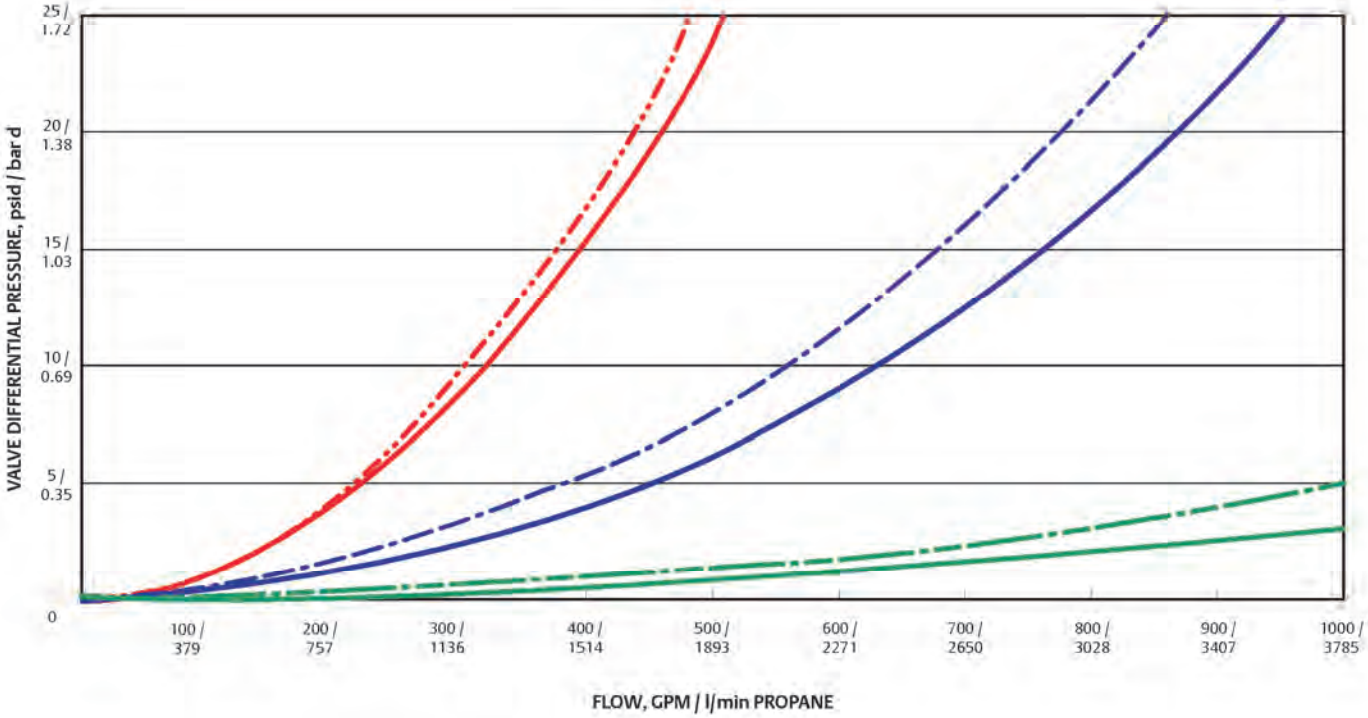

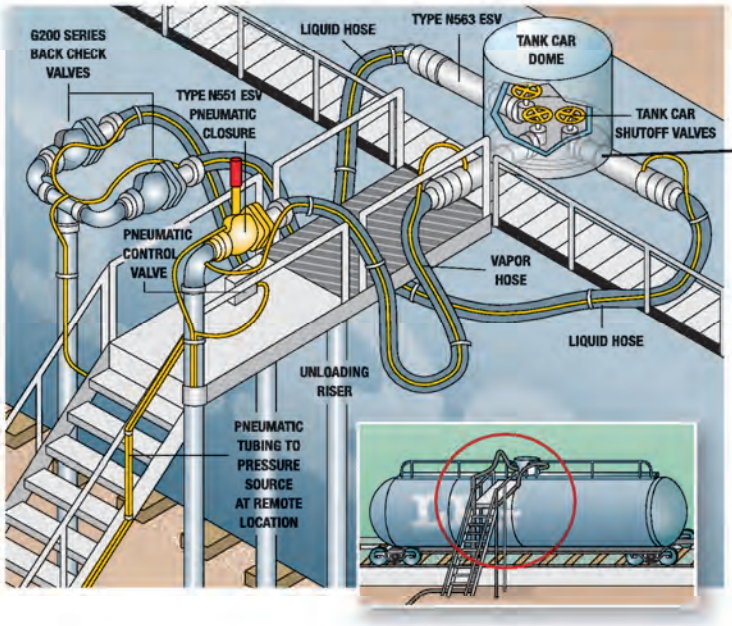

TYPE N562/N563

Snappy Joe™ Emergency Shutoff Valves for Railroad Tank Cars

Snappy Joe Emergency Shutoff Valves (ESVs) are designed for railcar protection and attached to the shutoff valves on railroad tank cars (refer to installation drawing). Typically three ESVs are used – two on the liquid lines and one on the vapor line. NFPA 58 regulations call for ESV protection on both sides of the transfer hose or piping. Types N562 and N563 are UL® listed for service in Propane and Anhydrous Ammonia. Its Nitrile (NBR) elastomer are UL approved to -40°F / -40°C.

Pneumatically operated, the valve is opened and closed by means of a standard quick-disconnect coupling (furnished). Approximately 20 to 60 psig / 1.4 to 4.1 bar is needed to open the valve, depending upon tank car pressure. Remote closure from one or more points, such as the unloading riser, is accomplished by exhausting pressure from the valve's piston chamber with a pneumatic control valve.

Ease of Use

- Nipple lengths attached to the 2 in. NPT female inlet are field selectable. These nipples can be easily secured and replaced.
- Outlet is FNPT or ACME for easy connection
- Pneumatically operated with quick disconnect coupling (included)

Application Flexibility

- UL approved for LPG and Anhydrous Ammonia (Nitrile (NBR) only)
- Comprehensive line of elastomers for all other compressed gas service
- A 1/4 in. FNPT opening in the hex portion can be used to install a bleed valve

System Protection

- Remote shutoff capability
- Emergency shut-off in the event of fire: valve closes at 212°F / 100°C

Durability

- All Stainless steel construction
- Wrenching Hex to prevent damage when connecting or disconnecting
- Hardened Stainless steel threads to reduce wear

Emergency Shutoff Valves - Railcars

Valves

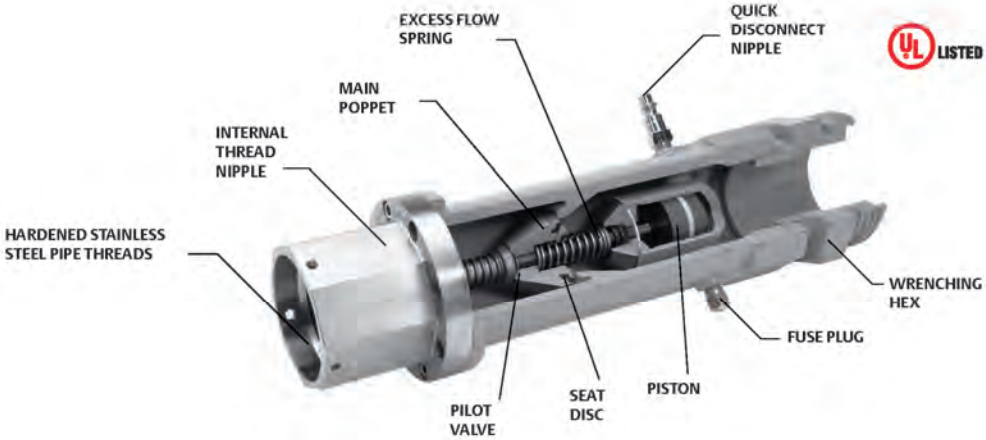

TYPE N562

Type N562 ESV integrates shutoff valve with an excess flow protection to automatically close if flow exceeds 200 GPM / 757 l/min propane at 13 psid / 0.90 bar d.

Railcar Emergency Shutoff Valves with Excess Flow				
TYPE	ELASTOMER	UL® LISTED	INLET CONNECTION, IN.	OUTLET CONNECTION, IN.
N562-16	Nitrile (NBR)	YES	2 FNPT	2 FNPT
N562-18				2-1/4 Male Acme
N562-26				3-1/4 Male Acme
N862K-16	Kalrez®(1)	NO		2 FNPT
N862K-18				2-1/4 Male Acme
N862K-26				3-1/4 Male Acme
N862V-16	Viton®(1)			2 FNPT
N862V-18				2-1/4 Male Acme
N862V-26				3-1/4 Male Acme

Type N563 ESV is designed for higher flow needs. It flows up to 413 GPM / 1563 l/m to reduce loading/unloading time and provide faster railcar turnover.

Railcar High Flow Emergency Shutoff Valves				
TYPE	ELASTOMER	UL LISTED	INLET CONNECTION, IN.	OUTLET CONNECTION, IN.
N563-16	Nitrile (NBR)	Yes	2 FNPT	2 FNPT
N563-26				3-1/4 Male Acme
N863E-16	EPDM	No		2 FNPT
N863E-26				3-1/4 Male Acme
N863K-16	Kalrez®(1)			2 FNPT
N863K-26				3-1/4 Male Acme
N863N-16	Neoprene (CR)			2 FNPT
N863N-26				3-1/4 Male Acme
N863T-16	Teflon®(2)			2 FNPT
N863T-26				3-1/4 Male Acme
N863V-16	Viton®(3)			2 FNPT
N863V-26				3-1/4 Male Acme

1. Perfluoroelastomer (FFKM) equivalent
2. PTFE equivalent
3. Fluorocarbon (FKM) equivalent

TYPE F138 | F100 SERIES | TYPE F130 | TYPE F134 | TYPE F190

Excess flow check valves are intended to close upon excessive discharge of vapor or liquid resulting from a break in the hose or piping system. They are used to protect cylinder, tank and piping systems and are available in a large variety of sizes and body configurations. Standard temperature rating is -20 to 160°F / -29 to 71°C.

When flow exceeds the valve's setting, the valve closes and remains closed until the system equalizes. A built-in equalizing passage automatically opens the valve once pressure on both sides of the poppet is equal. Valves larger than 1/2 in. NPT have a drill size No. 60. Valves with a 1/2 in. NPT and smaller have a limited bypass to comply with NFPA 58.

WARNING

A break or leak downstream of an excess flow valve, that does not allow a flow equal to the valve flow rating, will not actuate the valve and could cause a hazardous condition. For this reason, system operators should be familiar with the shutoff valves in the system so that necessary precautions can be taken in an emergency.

Care must be taken to be sure the valve's closing rate is less than the capacity of the LPG or Anhydrous Ammonia (NH_3) system in which the valve is installed. Brass valves are not suitable for Anhydrous Ammonia (NH_3) applications.

See the WARNING on page 50, if these excess flow valves are to be used on DOT Cargo Tanks.

UL® Approved Excess Flow Check Valves

TYPE	MATERIAL	APPLICATION	INLET CONNECTION, IN.	OUTLET CONNECTION, IN.	UL RATED CLOSING FLOW, PROPANE (HORIZONTAL POSITION)			DIFFERENTIAL PRESSURE, psid / bar d	WORKING PRESSURE, psig / bar
					Liquid GPM / l/min	Vapor SCFH / SCMH 25 psig / 1.7 bar Inlet	Vapor SCFH / SCMH 100 psig / 6.9 bar Inlet		
F138	Brass	In-Line	1/4 MNPT	1/4 FNPT	1.8 / 6.8	377 / 10.7	641 / 18.2	1.4 / 0.097	250 / 17.2
F202	Brass		Male POL	1/2 SAE Flare	1.9 / 7.2	634 / 17.9	1100 / 31.1	2.6 / 0.18	
F170	Brass	Tanks (Full or Half Coupling)	3/4 MNPT	3/4 FNPT	6.6 / 25.0	1184 / 33.5	2012 / 57.0	1.2 / 0.08	
F100	Brass				8.4 / 31.8	2010 / 56.9	3417 / 96.8	2.4 / 0.17	
F101	Brass				20 / 76.0	3459 / 97.9	5880 / 167	8.5 / 0.59	
F102	Brass		1-1/4 MNPT	1-1/4 FNPT	33 / 125	6300 / 178	10,630 / 301	10.7 / 0.74	
F105	Brass				55 / 208	9982 / 283	16,967 / 480	10.7 / 0.74	
F106	Brass		2 MNPT	2 FNPT	85 / 322	18,513 / 524	31,467 / 891	2.6 / 0.18	
F107	Brass				100 / 379	20,796 / 589	35,349 / 1001	3.6 / 0.25	
F130	Brass	In-Line	1 FNPT	1 FNPT	25 / 94.6	5287 / 150	8986 / 254	3.3 / 0.23	
F131	Brass		1-1/2 FNPT	1-1/2 FNPT	60 / 227	11,694 / 331	19,877 / 563	4.7 / 0.32	
F132	Brass		2 FNPT	2 FNPT	96 / 363	19,874 / 563	33,877 / 959	2.1 / 0.14	
F133	Brass				155 / 587	29,202 / 827	49,718 / 1408	4.2 / 0.29	
F134	Brass	Tanks (Full or Half Coupling)	1-1/2 MNPT x 1 FNPT	1 FNPT	28 / 106	5181 / 147	8806 / 249	2.7 / 0.19	
F135	Brass		2-1/2 MNPT x 1-1/2 FNPT	1-1/2 FNPT	60 / 227	12,000 / 340	20,290 / 575	5.2 / 0.35	
F190	Steel	Tanks[1] (Full or Half Coupling)	2 MNPT	2 MNPT x 1-1/4 FNPT	80 / 303	15,400 / 436	26,250 / 743	3.7 / 0.26	
F191	Steel				105 / 397	18,800 / 532	32,000 / 906	8.9 / 0.61	
F194	Steel		3 MNPT	2 MNPT	165 / 625	32,800 / 929	55,950 / 1584	3.1 / 0.21	
F195	Steel				260 / 984	50,650 / 1434	86,350 / 2445	6.9 / 0.48	
F198	Steel		3 MNPT	3 MNPT x 2 FNPT	165 / 625	33,000 / 934	56,250 / 1593	3.1 / 0.21	
F199	Steel				260 / 984	49,500 / 1402	84,350 / 2389	7.1 / 0.49	

1. LPG or NH_3 service.

TYPE H722

TYPE H733

TYPE H5118

TYPE H733F3

Relief Valves for Mobile Tanks and Transports

Primarily for trucks transporting LPG, Anhydrous Ammonia (NH_3) or other compressed gases.

Types H722, H733 and H5118 stainless steel relief valves resist rust and corrosion, including a 300 Series stainless steel spring for additional resistance to product contaminants. A thickly molded main seal improves service life and resistance to severe applications. Stainless steel makes it easy to remove the valve from the tank for periodic testing (as prescribed by DOT) and permits standard tank couplings instead of the more costly flanged tank openings. The Type H733 has an optional CL300 RF Flange connection. Standard product temperature rating is -20 to 160°F / -29 to 71°C.

Type H5118: Semi-Internal relief valve for 2 in. threaded recessed well-head connections on transports.

Tight fitting protective caps (Types P297, P298 and P299) are standard on the valve to ensure no debris blocks the valve discharge. Standard setpoints listed with UL for the Type H722 include 125, 156, 250, 265, 275 and 312 psig / 8.6, 10.8, 17.2, 18.3, 19.0 and 21.5 bar. Standard set points listed with UL for the Types H733 and H5118 include 250 and 265 psig / 17.2 and 18.3 bar. All set points between 100 and 400 psig / 6.9 and 27.6 bar are available with ASME approvals.

A 1-1/2 and 2-1/2 in. hex size (Type P304 or P305) wrench can be inserted into the valve socket when installing/removing the valve to provide a means of attaching a standard wrench.

UL® Approved Internal Relief Valves

TYPE	CONTAINER CONNECTION, IN.	START-TO-DISCHARGE SETTING		FLOW CAPACITY, SCFM / SCMH AIR		FOR TANK WITH AREA UP TO[3]: Ft² / m²	PROTECTIVE CAP (INCLUDED)
		psig	bar	UL	ASME		
H722-250	2 MNPT[1]	250	17.2	3635 / 6176	3203 / 5136	171 / 15.9	Type P297
H722-265		265	18.3	3556 / 6042	3386 / 5753	166 / 15.4	
H722-275		275	19.0	3714 / 6310	3508 / 5960	175 / 16.3	
H733-250	3 MNPT[2]	250	17.2	10,150 / 17,245	9369 / 15,918	598 / 55.6	Type P298
H733-265		265	18.3	10,940 / 18,587	9904 / 16,827	655 / 60.9	
H733F3-250	3 in. CL300 RF Flange	250	17.2	10,150 / 17,245	9369 / 15,918	598 / 55.6	Type P298
H733F3-265		265	18.3	10,940 / 18,587	9904 / 16,827	655 / 60.9	
H5118-250[4]	2 MNPT	250	17.2	10,530 / 17,891	9724 / 16,521	625 / 58.1	Type P299
H5118-265[4]		265	18.3	11,300 / 19,199	10,280 / 17,466	681 / 63.3	

1. Order Type P304 (1-1/2 in. hex bar) installation wrench.
2. Order Type P305 (2-1/2 in. hex bar) installation wrench.
3. Based on UL flow capacities.
4. Use with a 3.5 in. hex size installation tool.

Internal Relief Valves

TYPE	CONTAINER CONNECTION, IN.	SPRING RANGE[3], psig / bar	MATERIAL OPTION	ASME FLOW RATE FACTOR[4]
H822-1	2 MNPT[1]	100 to 150 / 6.9 to 10.3	**Standard** - Nitrile (NBR) E - EPDM K - Kalrez® N - Neoprene (CR) V - Viton®	10.18
H822-2	2 MNPT[1]	151 to 250 / 10.4 to 17.2		
H822-3	2 MNPT[1]	251 to 400/ 17.3 to 27.6		
H833-1	3 MNPT[2]	100 to 149 / 6.9 to 10.3		29.77
H833-2	3 MNPT[2]	150 to 200 / 10.3 to 13.8		
H833-3	3 MNPT[2]	201 to 275 / 13.9 to 19.0		
H833-4	3 MNPT[2]	276 to 330 / 19.0 to 22.8		
H833-5	3 MNPT[2]	331 to 400 / 22.8 to 27.6		
H833F3-3	3 CL300 RF Flange	201 to 275 / 13.9 to 19.0		
H8118-3[5]	2 MNPT	201 to 275 / 13.9 to 19.0	**Standard** - Nitrile (NBR) N - Neoprene (CR)	30.90

1. Order Type P304 (1-1/2 in. hex bar) installation wrench.
2. Order Type P305 (2-1/2 in. hex bar) installation wrench.
3. ASME-Approved set points approved within these spring ranges.
4. ASME Flow Capacity (SCFM Air) = [Set Pressure (psig) * 1.2+14.7] * ASME Flow Rate Factor.
5. Use with a 3.5 in. hex size installation tool.

TYPE H284

TYPE H5114

TYPE P104-24

Relief Valves for Bulk Storage

Types H284 and H5114 internal spring relief valves can be used in the H500 Combo Joe™ relief valve manifold or as separate units on stationary tanks. The valves are identical except for valve body materials – Type H284 of brass (LPG service) and Type H5114 of 316 Stainless steel (Anhydrous Ammonia (NH_3) or LPG service). All other components are stainless steel, including a 300 Series Stainless steel spring for additional resistance to product contaminants. A thickly molded main seal improves service life and resistance to severe applications. Flow area is 3.20 sq. in. Standard product temperature rating is -20 to 160°F / -29 to 71°C.

When used in ASME tanks, internal spring relief valves have only the poppet and part of the body outside the tank. The adjusting screw and all other parts are inside the tank, safe from tampering. Standard setpoints listed with UL for the Type H284 includes 225 and 250 psig / 15.5 and 17.2 bar. Standard setpoints listed with UL for the Type H5114 includes 250 and 265 psig / 17.2 and 18.3 bar. All set points between 100 and 400 psig / 6.9 and 27.6 bar are available with ASME approvals.

Outlet is 3 in. NPT for discharge stack connection. Type P104-24 pipe away adaptor (3 in. FNPT) is available for use with either valve. A 3-1/2 in. wrench can be used when installing or removing the valve. The drain deflector is furnished as standard on both the Types H284 and H5114. The Type P299 Rain Cap ships standard with each valve.

UL® Approved Types H284 and H5114 Large Stationary Tank Relief Valves

TYPE[1]	CONTAINER CONNECTION, IN.	SERVICE	CONSTRUCTION MATERIAL	START-TO-DISCHARGE SETTING, psig / bar	FLOW CAPACITY, SCFM / SCMH AIR		FOR TANK WITH AREA UP TO[2]: Ft² / m²
					UL	ASME	
H284-225	2 MNPT	LPG	Brass	225 / 15.5	9835 / 16,710	8797 / 14,946	575 / 53.4
H284-250				250 / 17.2	10,530 / 17,891	9724 / 16,521	625 / 58.1
H5114-250		NH_3 or LPG	Stainless Steel	250 / 17.2	10,530 / 17,891	9724 / 16,521	625 / 58.1
H5114-265				265 / 18.3	11,300 / 19,199	10,280 / 17,466	681 / 63.3

1. Use with a 3.5 in. hex size installation tool.
2. Based on UL flow capacities.

Types H884 and H8114 Special Service Large Stationary Tank Relief Valves

TYPE	SPRING RANGE[2], psig / bar	CONTAINER CONNECTION, IN.	MATERIAL OPTION	ASME FLOW RATE FACTOR[3]
H884-1	100 to 149 / 6.9 to 10.3	2 MNPT x 3 MNPT[1]	**Standard** - Nitrile (NBR) E - EPDM K - Kalrez® N - Neoprene (CR) V - Viton®	30.90
H884-2	150 to 200 / 10.3 to 13.8			
H884-3	201 to 275 / 13.9 to 19.0			
H884-4	276 to 330 / 19.0 to 22.8			
H884-5	331 to 400 / 22.8 to 27.6			
H8114-1	100 to 149 / 6.9 to 10.3			
H8114-2	150 to 200 / 10.3 to 13.8			
H8114-3	201 to 275 / 13.9 to 19.0			
H8114-4	276 to 300 / 19.0 to 22.8			
H8114-5	331 to 400 / 22.8 to 27.6			

1. Use with a 3.5 in. hex size installation tool.
2. ASME-Approved set points approved within these spring ranges.
3. ASME Flow Capacity (SCFM Air) = [Set Pressure (psig)* 1.2+14.7]* ASME Flow Rate Factor.

TYPE 63EGLP

REPLACEMENT PILOT
TYPE 6358

UL® LISTED FOR LPG

63EGLP Series Relief Valves

Fisher™ Type 63EGLP relief valve provides superior overpressure protection for large bulk plant applications. Available in steel and stainless steel constructions for LPG and other compressed gas applications. Bringing advanced technology from the petrochemical industry, the Type 63EGLP provides precise and controlled pressure relief in an emergency situation to protect your pressure vessel while simultaneously limiting the amount of product discharged to the atmosphere.

Tight fitting UV resistant caps are standard on all constructions, along with a load-rated lifting sling to assist with lifting and installation. End connections are standard 4 in. CL300 RF bolt patterns. Fisher Type 63EGLP relief valve provides the industries most advanced relief technologies. The accuracy and repeatability of pilot-operated pressure regulation excercises precise control during relief situations without relying on last-generation pop-style relief mechanics. The Fisher Type 63EGLP is the evolutionary leap forward in bulk plant pressure relief combining safety, durability and serviceability into one superior package.

Type 63EGLP-250 is UL listed for propane (LPG) at 250 psig / 17.2 bar. For other model types and set-point ranges, PED Category IV is also available for set points of 85 to 375 psig / 5.7 to 25.9 bar. The flow port diameter is 4.38 in. and the plug travel height is 2.0 in.

Main body gasket and studs and bolts are not included but can be ordered separately, see Instruction Manual D450321T012.

63EGLP Series Bulk Plant Relief Valves

TYPE	CONTAINER CONNECTION, IN.	SET PRESSURE		REPLACEMENT PILOT TYPE	FLOW RATE, SCFM / SCMM AIR	
		psig	bar		PER UL-132[1]	PED Cat. IV[2]
63EGLP-250	4 CL300 RF Flange[3]	250	17.2	6358EBLP-250	38,794 / 1099	N/A
63EGLP-EB1		85 to 140	5.9 to 9.7	6358EBLP-1	N/A	11,929 to 47,164 / 338 to 1336
63EGLP-EB2		130 to 200	9.0 to 13.8	6358EBLP-2		
63EGLP-EB3		180 to 350	12.4 to 24.1	6358EBLP-3		
63EGLP-EBH		250 to 375	17.2 to 26.0	6358EBHLP		

1. Capacity recorded at 20% over set pressure, UL listed for LPG.
2. Flow Rate (SCFM Air) = 121.5 * Set Pressure (psig) + 1602.
3. Flange Reducer 4 x 3 in. CL300 RF for 3 in. flange connections available, see Instruction Manual D450321T012.

TYPE H100

TYPE P206

TYPE P174

TYPE H173

TYPE H185

External Relief Valves

Used on ASME and DOT containers, all working parts of these valves are outside the container connection so they must be protected against mechanical damage.

The external relief valves use Brass as material of construction. Standard product temperature rating is -20 to 160°F / -29 to 71°C.

Protective caps are shipped with Fisher™ external relief valves. Replacement caps may be ordered separately (refer below).

Small External Relief Valves

TYPE	CONTAINER TYPE	CONTAINER CONNECTION, IN.	START-TO-DISCHARGE PRESSURE		PRESSURE PLUS BUILDUP		FLOW CAPACITY, SCFM / SCMH AIR	ACCESSORY	
			psig	bar	psig	bar		Pipeaway Adaptor	Protective Cap
H110-250[1]	ASME	1/4 MNPT	250	17.2	----	----	310 / 527	----	P206
H125-250		1/2 MNPT					610 / 1036		----
H135-250[1]							594 / 1009	P174[3]	
H150-250		3/4 MNPT					580 / 985	----	
H160-250[1]							605 / 1028		
H185-250[1]							2223 / 3777		P145
H185-275[1]			275	19.0			2456 / 4173		
H110-312[1]		1/4 MNPT	312	21.5			390 / 663		P206
H135-312[1]		1/2 MNPT					765 / 1300	P174[3]	----
H160-312		3/4 MNPT						----	
H123[1]	DOT or Hydrostatic Relief	1/4 MNPT	375	25.9			----		P206
H148[1]	Hydrostatic	1/2 MNPT					903 / 1534[2]	P174[3]	
H173[1]		3/4 MNPT							
H120-35		1/4 MNPT	35	2.4	60	4.1	77 / 131	----	
H120-60			60	4.1	85	5.9	105 / 178		
H120-120			120	8.3	145	10	165 / 281		
H120-150			150	10.3	180	12	191 / 325		
H120-175			175	12.1	210	14	224 / 380		
H120-200			200	13.8	240	17	262 / 445		
H120-225			225	15.5	270	19	280 / 476		
H120-275			275	19.0	330	23	303 / 515		
H120-350			350	24.1	420	29	445 / 756		
H124[1]			450	31.0	----	----	----	----	
H144[1]		1/2 MNPT							
H174[1]		3/4 MNPT							

1. Listed under UL® Section 132.
2. DOT cylinder water capacity 500 lbs / 227 kg, approved by Bureau of Explosives and CGA.
3. 1/2 in. FNPT.

TYPE N310
GLOBE VALVE

TYPE N310-24 GLOBE
VALVE

TYPE N410-24 ANGLE
VALVE

TYPE N450
ANGLE VALVE

Globe and angle valves are widely used at bulk plants to control gas flow in the piping system, at storage tanks, on trucks and at pumps or compressors. Their body configuration permits installation in a straight section of pipe (globe body) or where it is desired to make a change in piping direction (angle body).

All units have a 1/4 in. FNPT plugged boss in the downstream side of the body. A hydrostatic relief valve (Type H124) or a vent valve (Type J402S) can be installed in this outlet.

Heavy-duty ductile iron (DI A395) valves for either LPG or Anhydrous Ammonia (NH_3) service. Ranging in size from 1/2 to 3 in. / DN 15 to 80, each valve has spring loaded PTFE chevron packing for an effective seal against leakage. The valves are rated for 400 psig / 27.6 bar WOG and a standard temperature rating of -20 to 160°F / -29 to 71°C.

Valve disc rotation stops as soon as the disc contacts the body seat to help minimize disc wear. Oversize ports in all units give high flow capacity.

Types N310 and N410 – Heavy-duty ductile iron valves for either LPG or Anhydrous Ammonia (NH_3) service. Ranging in size from 1/2 to 3 in. / DN 15 to 80 each valve has spring loaded PTFE chevron packing for sealing against leakage. Ball bearing valve disc construction on 1-1/4 in. / DN 32 and larger sizes, gives a strong connection to the stem to protect the disc under back-flow conditions.

Types N350 and N450 – Economy globe and angle valves for LPG service. With many of the construction features of the Types N310 and N410, these valves can be supplied in 1/2 and 3/4 in. / DN 15 to 80 sizes. PTFE spring-loaded packing provides an effective seal against leakage within the valve's pressure range.

Globe and Angle Valves

SERVICE	INLET AND OUTLET CONNECTION, IN. / DN	TYPE			
		Heavy-Duty Version		Economy Version	
		Globe	Angle	Globe	Angle
LPG and NH_3	1/2 FNPT	N301-04	N401-04	----	----
	3/4 FNPT	N301-06	N401-06	----	----
	1 FNPT	N301-08	N401-08	----	----
	1-1/4 FNPT	N310-10	N410-10	----	----
	1-1/2 FNPT	N310-12	N410-12	----	----
	2 FNPT	N310-16	N410-16	----	----
	3 FNPT	N310-24	N410-24	----	----
	3 / 80 ASME Flange	N310F-24	N410F-24	----	----
LPG	1/2 FNPT	----	----	N350-04	N450-04
	3/4 FNPT	----	----	N350-06	N450-06

G100 SERIES

TYPE G105

Back check valves allow flow in only one direction and are normally closed. They are installed in liquid filling connections on stationary storage tanks, bobtail delivery trucks and liquid transfer lines.

G100 Series

G100 Series – used mainly in tank inlet connections, are offered in two styles of seat construction: metal-to-metal or soft seat. The soft seated construction is for the filling connection on bobtail delivery trucks. Because the valve gives tight shutoff, piping on the bobtail can be depressurized for maintenance or repair without leakage. The G100 Series has a 250 psi / 17.2 bar rating and bubbles at 0.25 psid / 17 mbar d. Standard product temperature rating is -20 to 160°F / -29 to 71°C.

Type G109 – was designed for in-line service at bulk plants with FNPT connections for easy installations.

G100 Series Back Check Valves

SEAT CONSTRUCTION	CONTAINER OR INLET CONNECTION, IN.	OUTLET CONNECTION, IN.	PROPANE FLOW CAPACITY AT 10 psig / 0.69 bar DIFFERENTIAL PRESSURE		TYPE	
			GPM	l/min	Brass	Steel
Metal-to-Metal	3/4 MNPT	3/4 FNPT	21	79.5	G100	----
	1-1/4 MNPT	1-1/4 FNPT	55	208	G101	----
	2 MNPT	2 FNPT	150	568	G102	G112
	2 FNPT	2 FNPT	150	568	G109	----
	3 MNPT	3 FNPT	250	946	----	G104
Soft Seat	2 MNPT	2 MNPT and 1-1/4 FNPT	137.5	520	----	G105
	3 FNPT	2 MNPT	254	961	----	G106
	3 MNPT	3 MNPT and 2 FNPT	254	961	----	G107

TYPE G201

Specifications

Types G200 and G201

Pressure Rating: 400 psig / 28 bar WOG
Temperature Rating: -20 to 160°F / -29 to 71°C
Body: Ductile iron
Internal Parts: Plated steel or stainless steel
Seat Disc: Synthetic rubber with metal-to-metal backup

G200 Series

G200 Series – back check valves are specifically intended for heavy-duty in-line service at the bulk plant's transfer area. The valves are suitable for LPG or Anhydrous Ammonia (NH_3) service.

Flow moves the spring loaded poppet to the open position as soon as pressure differential is created. When flow stops, the poppet closes. A soft seat construction gives tight shutoff so that piping can be blown down for maintenance.

With a body designed to reduce flow resistance, flow capacity is high. The 2 in. / DN 50 body size gives 350 GPM / 1325 l/min LPG at 10 psig / 0.69 bar differential pressure.

The G200 Series is built to stay on the job with all internal parts of plated steel or stainless steel.

Type G201 – has a built-in flow indicator mechanism, (see illustration), which can be used to replace sight flow indicators.

G200 Series Back Check Valves

SEAT CONSTRUCTION	CONTAINER OR INLET AND OUTLET CONNECTION, IN.	PROPANE FLOW CAPACITY AT 10 psig / 0.69 bar DIFFERENTIAL PRESSURE		TYPE	
				Ductile Iron	
		GPM	l/min	No Flow Indicator	Flow Indicator
Soft Seat	1-1/4 FNPT	190	719	G200-10	G201-10
	2 FNPT	350	1325	G200-16	G201-16
	3 FNPT	800	3028	G200-24	G201-24

Hose End Valves

Type N480 – hose end valves are intended for quick opening and closing during bobtail truck deliveries of LPG or Anhydrous Ammonia (NH_3). The unique design prevents opening unless attached to a 1-3/4 in. ACME filler valve at the tank. The 45° angle body configuration with 1 in. NPT inlet gives maximum handling ease during the transfer operation. Standard product temperature rating is -20 to 160°F / -29 to 71°C.

For increased safety, the Type N480 is designed to stay closed unless connected even with the operating lever in the open position. This prevents accidental opening during hose reel-up or at other times. The fluted coupler permits quick attachment to the filler valve and the operating lever is easy to reach for opening or closing.

Type M570 – filler hose adaptor, included with the Type N480, permits the hose end valve to be removed from filler valves that fail to close. Standard product temperature rating is -20 to 160°F / -29 to 71°C.

Type N481 – hose end valves without the Type M570 filler hose adaptor can be supplied for Anhydrous Ammonia (NH_3) applications. Standard product temperature rating is -20 to 160°F / -29 to 71°C.

Caution: Other brands of filler hose adaptors should not be used with the Type N480 because they could allow accidental opening of the valve while it is being handled.

TYPE N480

TYPE D140 OR D141

TYPE D138 OR D139

Large Filler Valves

Emerson offers large filler valves with heavy-duty construction throughout for rapid filling of ASME tanks or trucks. Thick-walled bodies, formed seat retainers and generous wrenching flats minimize damage to internal parts. The flow channel design offers low resistance-to-flow for increased pump and hose service. Standard product temperature rating is -20 to 160°F / -29 to 71°C.

Types D138 and D139 – offer single back check valves for use with either a supplementary G Series back check valve or a manual shutoff valve.

Types D140 and D141 – provide a two-piece design with both an upper and lower back check. The bubble tight upper back check has a resilient seat for maximum service life. A metal-to-metal lower back check protects against loss of product in case of an accident and permits removal of the upper body with the tank under pressure.

Large Filler Valves

TYPE	CONNECTIONS CONTAINER MNPT x LINE ACME	BACK CHECK STYLE	FILLING CAPACITY GPM / l/min PROPANE AT 10 psi / 0.69 bar DIFFERENTIAL
D138	2 x 2-1/4 in.	Single	105 / 397
D140		Double	100 / 379
D139	3 x 3-1/4 in.	Single	275 / 1041
D141		Double	225 / 852

Liquid Transfer Valves

The Type N456 attaches to a liquid withdrawal valve or similar constructions. The withdrawal valve is activated by means of a special adaptor on the Type N456 that opens the valve the correct distance to permit liquid transfer from the customer tank to the storage tank. Standard product temperature rating is -20 to 160°F / -29 to 71°C.

Type N456 – Special 3/4 in. MNPT inlet x 1-3/4 in. male ACME outlet. Consists of a Type N450-06 angle valve, a Type M455 inlet adaptor, a Type M215 outlet adaptor and a cap and chain to keep dirt from entering the valve when it is not in use.

TYPE M455

TYPE N456

Type M455 – Special 3/4 in. MNPT inlet x 3/4 in. MNPT outlet. Opens the tank's liquid withdrawal valve the correct distance to permit transfer operations. A Nylon (PA) gasket is supplied for a tight seal with the withdrawal valve.

Types N456 and M455 should be used with Types F171* and F210* Liquid Withdrawal Valves.

*Types F171 and F210 valves are obsolete Fisher™ products. Kindly contact your LPG Equipment Distributor for a suitable replacement.

Bypass Valves for Large Pumps

Designed for bypass on 2 to 4 in. size pumps, the N100 Series is widely used on both LPG and Anhydrous Ammonia (NH_3) applications. The throttling action of the N100 Series allows only surplus pump discharge to be returned to the tank.

A venturi flow passage gives a boost effect, permitting a greater valve opening for increased flow at the lower pressure build-ups when bypassing full pump output. These features help to give rapid, stable liquid transfer and reduce dangerous pressure pulsations. The valves contain only one moving part - the piston style inner valve.

An external sensing line is not required because tank pressure registers through a hole in the inner valve. Complete field servicing can be made without removing the valve from the piping.

All N100 Series bodies have a 1/4 in. FNPT tapped and plugged boss on the side inlet for either a pressure gauge or a hydrostatic relief valve and have a temperature rating of -20 to 160°F / -29 to 71°C.

N100 SERIES

Large Pump Bypass Valves

TYPE	PUMP SIZE, IN.	BODY SIZE, IN.	PSID SETTING		PSID RANGE	
			psig	bar	psig	bar
N100A-08-1[1]	2	1 FNPT	50	3.4	25 to 75	1.7 to 5.2
N100A-08-2[1]			115	7.9	50 to 150	3.4 to 10.3
N100A-10-1[1]	2 or 3	1-1/4 FNPT	50	3.4	25 to 75	1.7 to 5.2
N100A-10-2[1]			115	7.9	50 to 150	3.4 to 10.3
N100A-12-1[1]		1-1/2 FNPT	50	3.4	25 to 75	1.7 to 5.2
N100A-12-2[1]			115	7.9	50 to 150	3.4 to 10.3
N100-16-1	4	2 FNPT	50	3.4	25 to 75	1.7 to 5.2
N100-16-2		2 FNPT	115	7.9	50 to 150	3.4 to 10.3

1. Only the Type N100As are UL® listed.

Bypass Valves for Small Pumps

N110 Series – is intended for bypass service on the smaller pumps (5 to 40 GPM / 18.9 to 151 l/min) used on stationary tanks or delivery trucks. Suitable for LPG or Anhydrous Ammonia (NH_3) installations, the valve has an internal sensing orifice and does not require an external sensing line. Standard product temperature rating is -20 to 160°F / -29 to 71°C. A vent opening of the sensing orifice channel allows trapped vapor to escape, eliminating any vapor in the system when the pump is started. The compact size of the N110 Series (less than 6.5 in. / 165 mm overall) permits installation in limited space. A 1/4 in. FNPT tapped and plugged boss on the inlet side of the body can be used to install a hydrostatic relief valve or a pressure gauge. The valve does not have to be removed from the line for servicing; all internal parts can be reached by unscrewing the union nut.

N110 SERIES

Small Pump Bypass Valves

TYPE	PUMPING CAPACITY		BODY SIZE, IN.	PSID SETTING		PSID RANGE	
	GPM	l/min		psig	bar	psig	bar
N110-06-1	5 to 20	18.9 to 75.7	3/4 FNPT	50	3.4	25 to 75	1.7 to 5.2
N110-08-1	20 to 40	75.7 to 151	1 FNPT				
N110-06-2	5 to 20	18.9 to 75.7	3/4 FNPT	100	6.9	75 to 150	5.2 to 10.3
N110-08-2	20 to 40	75.7 to 151	1 FNPT				

Backpressure Valves

These valves are soft seated, holding a differential backpressure on liquid meters. A N120 Series backpressure valve is installed after the meter and it holds backpressure on the meter until vapor is forced back to the tank through the vapor eliminator. Standard product temperature rating is -20 to 160°F / -29 to 71°C. In this way vapor cannot form within the meter during liquid delivery.

Intended for smaller pumps, N120 Series are ideal on such applications as cylinder filling installations. All units have a 1/4 in. FNPT tapped and plugged boss on the inlet side of body and can be used for both LPG and Anhydrous Ammonia (NH_3) service. The N120 Series has a 1/4 in. FNPT connection in the closing cap for attachment of an external sensing line from the tank vapor space or vapor eliminator.

N120 SERIES

Backpressure Valves

TYPE	LIQUID METER SIZE, IN.	BODY SIZE, IN.	PSID SETTING		PSID RANGE	
			psig	bar	psig	bar
N120-06-3	3/4 or 1	3/4 FNPT	12	0.83	10 to 20	0.69 to 1.4
N120-08-3		1 FNPT				

TYPE J-31

Rotary Gauges

Fisher™ rotary gauges can be used on stationary or mobile tanks to visually indicate the amount of LPG or Anhydrous Ammonia (NH_3) in the container. They are also used in filling the tank to the proper liquid level. On mobile applications and some large stationary storage tanks, hangers are recommended to support the horizontal length of the dip tube.

The gauge is operated by opening the small bleed orifice when the tube is in the vapor space of the tank. Moving the pointer on the dial causes the end of the tube to move until it contacts liquid in the container. At that point, discharge from the bleed orifice turns from vapor to liquid and the rotary gauge dial gives the volume percentage of liquid in the tank.

Type J-31 – consists of heavy duty gauges that minimize vibration effects (swaying, bouncing) by a long (68 in. / 1.73 m) stem tube extension. Gauges fit 1 in. / 25.4 mm coupling container connections.

All gauges have stem and dip tubes with an extra large inside diameter. This assures that the correct liquid level can be obtained quickly.

A Nylon (PA) packing sleeve and a friction ring for the pointer indicator gives smooth rotation and long service life. Steel and stainless steel materials resist rust or corrosion. Standard product temperature rating is -20 to 160°F / -29 to 71°C.

Rotary Gauges				
LENGTH, IN. / mm	LPG DIAL >1200 GALLON	LPG DIAL ≤1200 GALLON	NH_3 DIAL >1200 GALLON	NO DIAL >1200 GALLON
68 / 1727	Type J31L-1	Type J31S-1	Type J31A-1	Type J31X-1
69 to 92 / 1753 to 2337	Type J31L-2	Type J31S-2	Type J31A-2	Type J31X-2
93 to 108 / 2362 to 2743	Type J31L-3	Type J31S-3	Type J31A-3	----
109 to 140 / 2769 to 3556	Type J31L-3L	Type J31S-3L	Type J31A-3L	Type J31X-3L
Dial Only	Type P323	Type P322	Type P324	----

TYPE J415-1

TYPE J415

Liquid Level Vent Valves

Type J415 – with steel construction, can be used on either LPG or Anhydrous Ammonia (NH_3) service. They can also be installed on large bulk storage tanks at the maximum filling level. Standard valve comes with a 3/4 in. MNPT container connection and two 1/4 in. FNPT side outlets. Standard product temperature rating is -20 to 160°F / -29 to 71°C.

Type J415-1 – features the addition of a Type J402S liquid level vent valve and Type J542 (0 to 400 psig / 0 to 27.6 bar) pressure gauge installed.

TYPE J402S

TYPE J403S

Vent Valves and Fixed Maximum Liquid Level Gauges

Used in all kinds of LPG containers to give positive visual indication of liquid reaching the maximum allowable liquid level. Standard product temperature rating is -20 to 160°F / -29 to 71°C.

Types J402S and J403S do not have dip tubes and must be used in containers where a dip tube has been welded in. Stainless steel constructions are for corrosive service.

TYPES J700 , J701 OR J702S

Container Thermometers

Suitable for any size tank in LPG and Anhydrous Ammonia (NH_3) service, the 2 in. / 51 mm diameter dial reads from -40 to 120°F / -40 to 49°C. They are dustproof and waterproof. Specify J700 Series for a 1/2 in. MNPT by a 4 in. / 102 mm length or Type J701 for a 1/2 in. MNPT by 6 in. / 152 mm length. Type J702S is 1/2 in. MNPT with 2 in. / 51 mm dial and 3 in. / 76 mm stem length and range of -80 to 120°F / -60 to 50°C.

All Thermometers are per ASME B40.1 standard.

TYPE M570

Filler Hose Adaptor

Intended for the outlet of a bobtail truck filling hose, the Type M570 enables the filling hose to be removed if the filler valve fails to close. An integral back check in the adaptor prevents gas from escaping in the event of a failure of the filler valve. The filler valve should be repaired as soon as possible and the Type M570 removed from the filler valve. Standard product temperature rating is -20 to 160°F / -29 to 71°C.

Filler Hose Adaptor			
TYPE	FILLER VALVE CONNECTION, IN.	HOSE END VALVE CONNECTION, IN.	BODY MATERIAL
M570	1-3/4 Female ACME	1-3/4 Male ACME	Brass

T13098 - Replacement Black Ring

T13103 - Replacement Gasket

TYPE P298

Types P206, P297 and P298 protective caps are used to keep moisture and foreign materials from entering the valves. These units are mounted outside the protective hood on the tank.

Relief Valve Protective Cap	
VALVE TYPE	PROTECTIVE CAP TYPE
H110	P206
H125	
H150	
H148	
H173	
H123	
H120	
H124	
H144	
H174	
H722	P297
H733	P298
H284	P299
H5114	
H5118	

TYPE P520L

Adjustable Orifice Reamer

The orifice reamer allows users to clean or ream out orifices of different sizes without changing tools. It allows for a range from 0.125 in. to size no. 52 (0.0635 in.).

TYPE N201

Cylinder Filling Valve

Type N201 – fills DOT cylinders by weight and stops the gas supply when specified fill weight is reached. Operated by air pressure, it is designed for beam type scales and requires no electrical or mechanical power.

The assembly comes completely piped up and includes special parts that allow the slide weight on the scale to move to zero. A red button appears in the indicator on top of the Type N201 each time a cylinder is filled to the desired weight. Standard product temperature rating is -20 to 160°F / -29 to 71°C.

Equipment and Accessories

Pilots and Repair Kits Listing

Pilots

Part #	Description
6351V-2	Type 6351 Pilot for Type 1098/1098H; 5 to 35 psig / 0.34 to 2.4 bar; Viton®
6358EBHLP	250 to 375 psig / 17.2 to 25.9 bar; Relief Valve Pilot Assembly; with Elbow
6358EBLP-1	85 to 140 psig / 5.9 to 9.7 bar; Relief Valve Pilot Assembly; with Elbow
6358EBLP-2	130 to 200 psig / 9 to 13.8 bar; Relief Valve Pilot Assembly; with Elbow
6358EBLP-250	UL® Listed Pilot; 250 psig / 17.2 bar setpoint
6358EBLP-3	180 to 350 psig / 12.4 to 24.1 bar; Relief Valve Pilot Assembly; with Elbow
99H-1	99 Series Pilot (Type 61H); 10 to 65 psi / 0.69 to 4.5 bar
99HP-1	99 Series Pilot (Type 61HP); 35 to 100 psi / 2.4 to 6.9 bar
99L-1	99 Series Pilot (Type 61L); 1/4 to 2 psi / 17 mbar to 0.14 bar
99L-2	99 Series Pilot (Type 61L); 1 to 5 psi / 69 mbar to 0.34 bar
99L-3	99 Series Pilot (Type 61L); 2 to 10 psi / 0.14 to 0.69 bar
99L-4	99 Series Pilot (Type 61L); 5 to 15 psi / 0.34 to 1 bar
99L-5	99 Series Pilot (Type 61L); 10 to 20 psi / 0.69 to 1.4 bar
XAPT6352002	Type 6352 Pilot for Type 1098 Regulator; 14 in. to 2 psig / 35 mbar to 0.14 bar
XAPT6352010	Type 6352 Pilot for Type 1098 Regulator; 2 to 10 psig / 0.14 to 0.69 bar
XAPT6352040	Type 6353 Pilot for Type 1098 Regulator; 3 to 40 psig / 0.21 to 2.8 bar
XAPT6352075	Type 6353 Pilot for Type 1098 Regulator; 35 to 125 psig / 2.4 to 8.6 bar

Repair Kits - Regulators

Type No.	Description
R299X000012	Type 299 Spare Repair Kit
R61HHX00012	Type 61HH Neoprene (CR)/Diaphragm Nitrile (NBR)/Disc Repair Kit
R61HPX00022	Type 61HP Standard Repair Kit
R61HX000012	Type 61H Nitrile (NBR) Diaphragm/Disc Repair Kit
R61LDX00012	Type 61LD Nitrile (NBR) Diaphragm/Disc Repair Kit
R61LX000012	Type 61L Nitrile (NBR) Diaphragm/Disc Repair Kit
R627HX00S12	Types 627H and 627HM SST/Nylon (PA) Trim Repair Kit
R627RX00A12	Types 627MR and 627R Aluminum/Nitrile (NBR) Trim Repair Kit
R627RX00A22	Types 627MR and 627R Aluminum/Nylon (PA) Trim Repair Kit
R627RX00S12	Types 627MR and 627R SST/Nitrile (NBR) Trim Repair Kit
R627RX00S22	Types 627MR and 627R SST/Nylon (PA) Trim Repair Kit
R627X000A12	Types 627 and 627M Aluminum/Nitrile (NBR) Trim Repair Kit
R627X000A22	Types 627 and 627M Aluminum/Nylon (PA) Trim Repair Kit
R627X000S12	Types 627 and 627M SST/Nitrile (NBR) Trim Repair Kit
R627X000S22	Types 627 and 627M SST/Nylon (PA) Trim Repair Kit
R627X000V12	Types 627 Aluminum/Fluorocarbon (FKM) Trim Repair Kit
R630X000L12	Type 630 Low Pressure Brass Trim with Comp/Disc Repair Kit
R630X000L22	Type 630 Low Pressure Brass Trim with Nylon (PA)/Disc Repair Kit
R64RX000012	Type 64R Spring Range 3 to 150 Repair Kit
R64RX000H22	Type 64R Spring Range 130 to 200 Repair Kit
R64SRT00012	Type 64SR LPG Regulator Repair Kit
R64X0000012	Type 64 Spring Range 3 to 150 Repair Kit
R64X0000H22	Type 64 Spring Range 130 to 200 Repair Kit
R67CX000012	Type 67C Brass/Nitrile (NBR) Repair Kit
R99HPX00012	Type 99HP Comp Disc 7/8 in. Port Repair Kit
R99HPX00022	Type 99HP Comp Disc 1-1/8 in. Port Repair Kit
R99HX000012	Type 99H Comp Disc 7/8 in. Port Repair Kit
R99HX000022	Type 99H Comp Disc 1-1/8 in. Port Repair Kit
R99LX000012	Type 99L Comp Disc 7/8 in. Port Repair Kit
R99LX000022	Type 99L Comp Disc 1-1/8 in. Port Repair Kit
R99LX000032	Type 99 Vent Assembly Retrofit Repair Kit
RCS200X0012	Type CS200 Repair Kit
RCS400X0012	Types CS400, CS403 and CS404 Repair Kit
RCS403X0012	Type CS403 Repair Kit
RCS404X0012	Type CS404 Repair Kit
RCS800XBLK2	Type CS800 with Black Disc Repair Kit
RCS800XBLU2	Type CS800 with Blue Disc Repair Kit
RCS800XGRN2	Type CS800 with Green Disc Repair Kit
RS100X00012	Types S100 and S102 Spare Less Seat Repair Kit

Repair Kits - Regulators

Part #	Description
RS200XRT012	Type S200 Stabilizing Retrofit Repair Kit
RS201HX0012	Types S201H and S202H Spare Less Seat Repair Kit
RS201KX0012	Type S201K Spare Less Seat Repair Kit
RS201X00012	Types S201 and S202 Spare Less Seat Repair Kit
RS301FX0012	Types S301D and S301F Spare Less Seat Repair Kit
RS301PX0012	Type S301P, High Pressure and Type S302P; High Pressure Spare Less Seat Repair Kit
RS301X00012	Type S301, High Pressure; Type S302; High Pressure Spare Less Seat Repair Kit
RS400X00012	S400 Series Orifice Tube; 1/8 in. Repair Kit
RS400X00022	S400 Series Orifice Tube; 3/16 in. Repair Kit
RS400X00032	S400 Series Orifice Tube; 1/4 in. Repair Kit
R63EGLPX012	Repair kit for Type 63EGLP Main body

Repair Kits - Valves

Part #	Description
1P110799152	C404-32, 4" Upper Spiral Wound Gasket
ERAA03396A0	C404-32 Retrofit Cable Pulley Kit
ERSA03240A0	C404-32 Lower Spiral Wound Gasket (Replaces T1118299152 and GA26077X032)
MK63EGLP001	Type 63EGLP Mounting Kit; Tank to Valve; Studs and Nuts
MK63EGLP002	Type 63EGLP Mounting Kit; Valve to Reducer; Bolts and Nuts
N56X-REPAIR	Contact your Fisher™ Distributor
R63EGLPX012	Repair kit for Type 63EGLP Main body
RC40016T012	2 in. Types C421 and C427 Repair Kit
RC40024T012	3 in. Types C421 and C427 Repair Kit
RC40324T012	3 in. Types C403-24 Repair Kit
RC40424T012	3 in. Types C404-24 Repair Kit
RC404YGT012	Types C404-32 Seal Replacement Parts Kit; Y Grade NGL
RC40710T012	Repair Kit for 1-1/4 in. Type C407-10
RC40710T032	Repair Kit Type C407-10, New Spring, Cam, with Gland Assembly, Seals, Nitrile (NBR)
RC40710T042	Type C407-10 Repair Kit, Main and Gland Seals, Cam and Spring
RC47016T012	2 NPT Types C471 and C477 Repair Kit
RC47024T012	3 NPT Types C471 and C477 Repair Kit
RC48324T012	Type C483 Repair Kit
RC48424T012	Type C484 Repair Kit

Repair Kits - Valves

Part #	Description
RCN551T0012	Type N551 Packing Repair Kit
RFC40432T12	Type C40432 Retro Fit Kit
RFC4716T012	2 in. NPT Type C471/C477 Jet Bleed Retro Fit Kit
RFC4724T012	3 in. NPT Type C471/C477 Jet Bleed Retro Fit Kit
RFC4824T012	3 in. Flange Type C483/C484 Jet Bleed Retro Fit Kit
RN30008T012	Type N300-8/N400-8 Nitrile (NBR) Trim Repair Kit
RN30012T012	Type N300-12/N400-12 Nitrile (NBR) Trim Repair Kit
RN30016T012	Type N300-16/N400-16 Nitrile (NBR) Trim Repair Kit
RN30024T012	Type N300/N400-24 Nitrile (NBR) Trim Repair Kit
RN350T00012	N350/N450 Series Nitrile (NBR) Trim Repair Kit
T12689T0012	N300/N400 Series Repair Kit; Bonnet, Packing and Stem Assembly
T13090T0012	Type N550 Packing Repair Kit
T11396000B2	Retrofitted Type C404-32 Packing Replacement Kit
T11396000C2	Type C404-32 Seals Replacement Parts Kit
T20377000B2	2 in. Types C421, C427, C471 and C477; Nitrile (NBR) Gland Assembly with Gland O-ring
T20430000B2	3 in. Types C421, C427, C471, C477, C483, C484 and C486 Nitrile (NBR) Gland Assembly with Gland O-ring

Repair Kits, Misc Repair Parts

Part #	Description
1A368124112	C403, C483, C404, C484 Mounting Stud Nut
1N946228982	C403 & C483 Series valve Mounting Stud Bolt
1P790832982	C404 & C484 Series Internal Valve Mounting Stud Bolt
1P8776	C404 & C484 Series Internal Valve 3" Lower Gasket
1P8777	C483 Series Internal Valve 3" Upper Gasket, pre-1990
RFC4716T012	C421 & C427 Series Valves Retrofit to C471 & C477
RFC4724T012	C421 & C427 Series Valves Retrofit to C471 & C477
RFC4824T012	C403-24 Series Internal Valve Retrofit to C483-24
RFC40432T12	C404-32 Series Valve Retrofit to 4" pre-April 2012
RH282732T12	H732 Series Relief Valve Repair Kit
RH722T00012	H722 Series Relief Valve Repair Kit
T1056138992	C403-24 &C483-24 Series Internal Valve 3" Lower Gasket
T10958	Cap ONLY - J31L Rotary Gauge
T10971	Cap & Seat ONLY - J31L Rotary Gauge
T1118131032	C404-32 Series Internal Valve Mounting Stud Bolt
T11182	C403 & C483 Series Internal Valve 4" Lower Gasket

Repair Kits, Misc Repair Parts

Part #	Description
T13049	N550 Series ESV - MAGNALUBE
T13184T012	B600, C600, L677AR Series Valve Replacement Bonnet Assembly
T13500	N551 Series ESV Fusible Link
T13603T0012	C483 Series Internal Valve 3" Upper Gasket, post - 1990
T20377000A2	C421, C427, C471, C477 2" Packing Gland Assembly
T20714	N551 Series ESV Replacement Rubber Covered Handle
WG4X396	N562-26 Female Airline Quick Connect
WG4X672	N562-26 Male Airline Quick Connect
WGX396	N562-26 N562-26 Replacement Coupling
WGX672	N562-26 Male Replacement Coupling

WARRANTY AND LIABILITY

In consideration for the discount pricing offered above, the following terms and conditions are accepted by Distributor and shall apply to all products subject to this pricing sheet ("Goods"). Distributor shall extend these limited warranty and limitation of liability provisions, in their entirety and without change, to customers and end users of the products.

1. Limited Warranty: Subject to the Limitation of Remedy and Liability below, Emerson Process Management Regulator Technologies, Inc. ("RTI") warrants that the Goods manufactured by RTI will be free from defects in materials or workmanship under normal use and care until the expiration of the warranty period. Goods are warranted for five (5) years from the date of manufacture. Products purchased by RTI from a third party for resale to Distributor and/or its customers (each a "Buyer") ("Resale Products") shall carry only the warranty extended by the original manufacturer. Buyer agrees that RTI has no liability for Resale Products beyond making a reasonable commercial effort to arrange for procurement and shipping of the Resale Products. If Buyer discovers any warranty defects and notifies RTI thereof in writing during the applicable warranty period, RTI shall, at its option, repair or replace FOB point of manufacture that portion of the Goods found by RTI to be defective, or refund the purchase price of the defection portion of the Goods. Failure by Buyer to give such written notice within the applicable time period specified above shall be deemed an absolute and unconditional waiver of the Buyer's claims for such defects. All replacements or repairs necessitated by inadequate maintenance, normal wear and usage, unsuitable power sources or environmental conditions, accident, misuse, improper installation, modification, repair, storage or handling, or any other cause not the fault of RTI are not covered by this limited warranty, and shall be at Buyer's expense. RTI shall not be obligated to pay any costs or charges incurred by Buyer or any other party except as may be agreed upon in writing in advance by RTI. All costs of dismantling, reinstallation, and freight and the time and expenses of RTI's personnel and representatives for site travel and diagnosis under this warranty clause shall be borne by Buyer unless accepted in writing by RTI. Goods repaired and parts replaced by RTI during the warranty period shall be in warranty for the remainder of the original warranty period or ninety (90) days, whichever is longer. This limited warranty is the only warranty made by RTI and can be amended only in writing signed by RTI. THE WARRANTIES AND REMEDIES SET FORTH ABOVE ARE EXCLUSIVE. THERE ARE NO REPRESENTATIONS OR WARRANTIES OF ANY KIND, EXPRESS OR IMPLIED, AS TO MERCHANTABILITY, FITNESS FOR PARTICULAR PURPOSE OR ANY OTHER MATTER WITH RESPECT TO ANY OF THE GOODS OR SERVICES

2. LIMITATION OF REMEDY AND LIABILITY: RTI SHALL NOT BE LIABLE FOR DAMAGES CAUSED BY DELAY IN PERFORMANCE. THE REMEDIES OF BUYER SET FORTH ABOVE ARE EXCLUSIVE. IN NO EVENT, REGARDLESS OF THE FORM OF THE CLAIM OR CAUSE OF ACTION (WHETHER BASED IN CONTRACT, INFRINGEMENT, NEGLIGENCE, STRICT LIABILITY, OTHER TORT OR OTHERWISE), SHALL RTI'S LIABILITY TO BUYER AND/OR ITS CUSTOMERS EXCEED THE PRICE TO BUYER OF THE SPECIFIC GOODS MANUFACTURED BY RTI GIVING RISE TO THE CLAIM OR CAUSE OF ACTION. BUYER AGREES THAT IN NO EVENT SHALL RTI'S LIABILITY TO BUYER AND/OR ITS CUSTOMERS EXTEND TO INCLUDE INCIDENTAL, CONSEQUENTIAL OR PUNITIVE DAMAGES. THE TERM "CONSEQUENTIAL DAMAGES" SHALL INCLUDE, BUT NOT BE LIMITED TO, LOSS OF ANTICIPATED PROFITS, REVENUE OR USE AND COSTS INCURRED INCLUDING WITHOUT LIMITATION CAPITAL, FUEL AND POWER, AND CLAIMS OF BUYER'S CUSTOMERS. RTI shall not be liable for and Buyer assumes all liability for, all personal injury (including without limitation death) and property damage in connection with or arising from the handling, transportation, possession, processing, further manufacture, other use or resale of the Goods, whether the Goods are used alone or in combination with any other material. Neither transportation charges for the return of the Goods nor any other costs, charges or expenses incurred by Buyer will be paid by RTI unless authorized in advance and in writing by RTI. All Goods returned for repair are to be shipped prepaid for the account of the Buyer by a mode of transportation approved by RTI. If RTI furnishes technical or other advice to Buyer, whether or not at Buyer's request, with respect to processing, further manufacture, or other use or resale of the Goods, RTI shall not be liable for, and Buyer assumes all risk of, such advice and the results thereof.

3. Emerson Process Management Regulator Technologies, Inc. and their affiliated entities assume no responsibility for the selection, use or maintenance of any product. Responsibility for proper selection, use and maintenance of any product remains solely with the purchaser and end user.

4. The pricing information contained herein is "Confidential" and shall not be disclosed to third parties. While every attempt has been made to assure the accuracy and completeness of the information contained herein, RTI offers no warranty or guarantee, express or implied, regarding the information. All sales are governed by RTI's terms and conditions of sale, which are available upon request. RTI reserves the right to (i) modify and/or improve its designs or specifications of its products; (ii) discontinue its products; and/or (iii) modify its pricing, without notice, at any time.

!WARNING!

Failure to follow these instructions or to properly install and maintain this equipment could result in an explosion and/or fire causing property damage and personal injury or death.

Marshall Excelsior equipment must be installed, operated and maintained in accordance with federal, state and local codes and MEC instructions. The installation in most states must also comply with NFPA 54 and NFPA 58 standards.

Only personnel trained in the proper procedures, codes, standards and regulations of the LP-Gas industry shall install and service this equipment.

WARNING: These products contain a chemical known to the state of California to cause cancer and birth defects or reproductive harm.

Things to tell the gas customer:

1. Show the customer the vent, vent assembly or vent line. Stress that this opening must remain unobstructed at all times. Tell the customer to check the vent opening after a freezing rain, sleet storm, or snow to make sure ice has not formed in the vent.
2. Show the customer the shutoff valve on the container. The customer should close this valve immediately if gas is smelled, appliance pilot lights fail to stay on or appear higher than usual or any other abnormal situation occurs.
3. Tell the customer to call your company to service the regulator if the regulator vents gas or a leak develops in the system. **Only a qualified gas service person shall install or service the regulators.**

Scope of the Manual

This instruction manual covers installation and maintenance for the first stage, second stage, and integral two-stage regulators used on LP-Gas vapor service applications. **They are not to be used on liquid service.**

Description

- **25 Year Recommended Replacement Life:** The MEC Regulator Series is designed using rugged time-proven design concepts and constructed of corrosion resistant materials, both internally and externally. With proper installation and periodic inspection and maintenance, they will meet a 25 Year Recommended Replacement Life.
- **Screened Drip-Lip:** Screened Drip-Lip is oriented either over the inlet, outlet, or at 90° depending on the configuration.
- **Pressure Tap Size Restrictions:** 1/8" NPT / #54 (0.055") orifice on all pressure points.
- **Temperature Capabilities:** -40°F to 160°F (-40°C to 71°C)

Contact the factory if the regulator is to be used on any service other than LP-Gas, or in a Severe Duty Application, or any application other than Domestic Type or Household Use. The following information is located on the spring case: The Part Number, orifice size, spring range and date code.

2nd Stage Low Pressure Regulator - UL Listed:

MEGR-1222 MEGR-1252 MEGR-1622 MEGR-1642 MEGR-1652
FIGURE 1: SECOND STAGE REGULATOR

The second stage regulator is designed to reduce the outlet pressure from a first-stage regulator (usually 10 psig (0,69 bar)) to an outlet pressure of 11 -inches water column (27 millibars).

The combination of a high capacity relief valve and large vent provide overpressure protection which exceeds UL standards and is capable of limiting the downstream pressure to 2 psig (0,14 bar) even in a double failure situation when used with a first-stage regulator.

Integral Two-Stage Regulator - UL Listed:

MEGR-1232 MEGR-1632
FIGURE 2: INTEGRAL TWO-STAGE REGULATOR

The integral two-stage regulator contains a non-adjustable first stage regulator on the inlet of the second stage portion of the regulator. It is designed to reduce the tank pressure to an outlet pressure of 11 inches water column. The second stage portion has a high capacity internal relief valve construction. The first stage does not have an internal relief valve.

First Stage Regulator - UL Listed:

MEGR-1222H MEGR-1622H
FIGURE 3: FIRST STAGE REGULATOR

The first stage regulators are designed for high pressure (pounds per square inch) vapor service. These regulators have high capacity internal relief valves. The outlet pressure setting is factory set at a nominal 10 psig (0,69 bar).

2 PSI Service Regulator - UL Listed:

MEGR-1622E MEGR-1652E
FIGURE 4: 2 PSI SERVICE REGULATOR

The 2 PSI service regulator is designed to reduce the outlet pressure from a first-stage regulator (usually 10 psig (0.69 bar)) to a nominal outlet pressure of 2 psig (0,14 bar).

The combination of high capacity relief valve and large vent provide overpressure protection which exceeds UL standards and is capable of limiting the downstream pressure in a double failure situation when used with a first-stage regulator.

2-PSI Integral Two Stage Regulator - UL Listed:

MEGR-1232E MEGR-1632E
FIGURE 5: 2 PSI INTEGRAL TWO-STAGE REGULATOR

The integral two-stage 2 PSI regulator contains a non-adjustable first stage regulator on the inlet of the second stage portion of the regulator. It is designed to reduce the tank pressure to a nominal outlet pressure of 2 psig (0,14 bar). The second stage portion has a high capacity internal relief valve construction. The first stage does not have an internal relief valve.

Installation

!WARNING!

All vents should be kept open to permit free flow of air in and out of the regulator. Protect vent openings against the entrance of rain, snow, ice formation, paint, mud, insects or any other foreign material that could plug the vent or vent line.

Installation (Continued)

!WARNING!

LP-Gas may discharge to the atmosphere through the vent. An obstructed vent which limits air or gas flow can cause abnormally high pressure that could result in personal injury or property damage.

The first stage and integral two-stage regulators are not suitable for indoor installations. Never use them on low pressure (inches of water column) service because personal injury or property damage could occur.

Before installation:

- Check for damage, which may have occurred in shipment.
- Check for and remove any dirt or foreign material that may have accumulated in the regulator body.
- Replace old pigtails. Blow out any debris, dirt or copper sulfate in the copper tubing and the pipeline.
- Apply pipe compound to the male threads of the pipe before installing the regulator.
- Make sure gas flow through the regulator is in the same direction as the arrow on the body. "Inlet" and "Outlet" connections are clearly marked.

Figure 2: Regulator with Vent Pointed Down

Installation Location, see Figure 2:

- The installed regulator should be adequately protected from vehicular traffic and damage from other external sources.
- **Install the regulator with the vent pointed vertically down.** If the vent cannot be installed in a vertically down position, the regulator must be installed under a separate protective cover. Installing the regulator with the vent down allows condensation to drain, minimizes the entry of water or other debris from entering the vent, and minimizes vent blockage from freezing precipitation.
- **Do not install the regulator in a location where there can be excessive water accumulation or ice formation,** such as directly beneath a down spout, gutter or roof line of building. Even a protective hood may not provide adequate protection in these instances.
- Install the regulator so that any gas discharge though the vent or vent assembly is over 3 -feet (0,9 meters) horizontally from any building opening below the level of discharge and not less than 5-feet in any direction away from any source of ignition, openings into direct vent appliances, or mechanical ventilation air intakes.
- Install the regulator high enough above ground level - at least 24-inches (60 cm) - so that rain splatter cannot freeze in the vent.
- Some installations, such as in areas with heavy snowfall, may require a hood or enclosure to protect the regulator from snow load and vent freeze over.

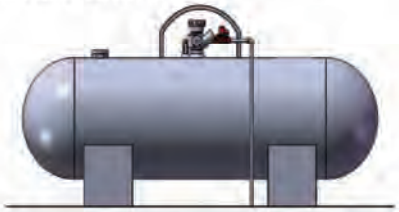

Figure 3: Tank Installation

Horizontally Installed Regulators, see Figure 3:

Horizontally mounted regulators, such as found in single cylinder installations and ASME tanks, must be installed beneath a protective cover or under the ASME tank dome. If possible, slope or turn the vent down sufficiently to allow any condensation to drain out of the spring case. Be careful that the slot in the tank dome or protective cover for the regulator's outlet piping does not expose the vent to the elements. The first stage vent on the integral two-stage regulator should be pointed down.

Indoor Installations, see Figure 4:

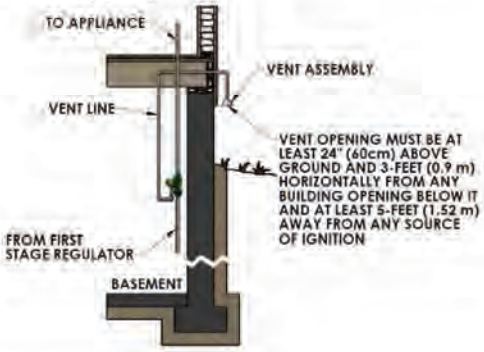

Figure 4: Basement Installation

The first stage and integral regulators are not recommended for indoor installations. The second stage regulator may be installed indoors as follows.

By code, regulators installed indoors have limited inlet pressure, and they **require** a vent line to the outside of the building. A vent assembly, such as MEC ME960 or at least 3/4" NPT pipe, Gray PVC Schedule 40 Rigid Non-Metallic Electrical Conduit for above Ground Service, per UL 651, should be used. The same installation precautions, previously discussed throughout this manual for the regulator vent, apply to the end of the vent tube assembly. Vent lines must not restrict the gas flow from the regulator's internal relief valve. To install the vent line, remove the vent screen and apply a good grade of pipe compound to the male threads of the line. Vent lines should be as straight as possible with a minimum number of bends.

Underground Installations, see Figure 5:

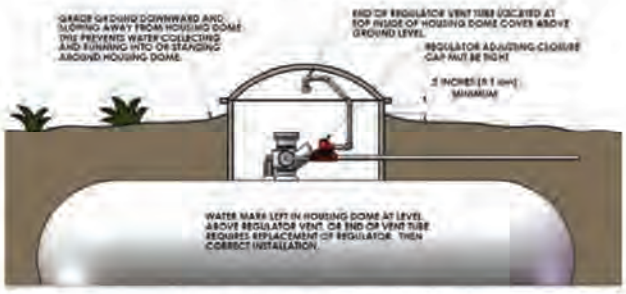

Figure 5: Underground Installation

!WARNING!

The integral two-stage regulators require 2 vent lines, one for the first stage vent (1/4" OD copper tube inverted flare connection: 7/16-24 UN thread) and the other for the second stage vent (3/8" NPT) of the regulator. Failure to use 2 separate vent tubes can result in early regulator failure and / or over pressuring the second stage that could result in fire or personal injury.

A regulator installed in the dome of an underground container requires a vent line to prevent water from entering the regulator spring case. Remove the vent screen(s) and install a vent line(s). The vent line must be run from the regulator vent(s) to above the maximum water table. The vent line opening(s) must terminate at the extreme top inside of the dome cover. Make sure the regulator's closing cap is on tightly, and maintain drainage away from the dome at all times.

Adjustment

Each regulator is factory set. If it becomes necessary to increase the outlet pressure, remove the closing cap and turn the adjustment screw clockwise. Turn the adjusting screw counterclockwise to decrease the outlet pressure.

The inlet and outlet pressure tap plugs may be removed using a 7/16" wrench. The pressure tap is restricted with a #54 orifice, so the plug can be removed with pressure in the regulator. Install a pressure gauge to determine the regulator's inlet pressure and outlet setting during adjustment. Actual pressure at the second stage regulator may be less due to line loss. After setting, add thread sealant to the pipe plug and reinstall it. Replace the closing cap. Check the plug for leakage.

Overpressure Protection

!WARNING!

Some type of overpressure protection is needed if actual inlet pressure can exceed the inlet pressure rating. Overpressuring any portion of this equipment above the limits shown in the Specifications may cause damage to regulator parts, leaks in the regulator, or personal injury due to bursting of pressure-containing parts or explosion of accumulated gas.

If any portion of the regulator is exposed to an overpressure condition that exceeds the limits in the Specifications, it must be inspected for damage that may have occurred.

Large volumes of gas may discharge though the regulator vent during internal relief valve operation, which can, if not controlled, result in fire or explosion from accumulated gas.

The first stage, integral two-stage, and second stage series regulator, **except for the first stage of the integral two-stage,** contain internal relief valves. The internal relief valve in all units will give overpressure protection against excessive build-up resulting from seat leakage due to worn parts, chips or foreign material on the orifice. The amount of internal relief protection provided varies with the regulator type and the cause for the overpressure relief valve operation. When the internal relief valve opens, gas escapes to the atmosphere through the regulator's vent.

Some type of additional external overpressure protection must be provided if the outlet pressure in an overpressure condition exceeds the inlet pressure rating of the gas system or downstream equipment. Common methods of external overpressure protection include relief valves, monitoring regulators, shutoff devices, and series regulation.

Maintenance

!WARNING!

To avoid personal injury or equipment damage, do not attempt any maintenance or disassembly without first isolating the regulator from system pressure and relieving all internal pressure.

Regulators that have been disassembled for repair must be tested for proper operation before being returned to service. Only parts manufactured by MEC should be used for repairing MEC regulators. Relight pilot lights according to normal startup procedures found in the appliance manufacturers' instructions. Due to normal wear or damage that may occur from external sources, these regulators must be inspected and maintained periodically. The frequency of inspection and replacement of the regulators depends upon the severity of service conditions or the requirements of local, state and federal regulations. Even under ideal conditions, these regulators should be replaced after 25 years from date of manufacture or sooner should inspection reveal the need.

Visually inspect the regulator each time a gas delivery is made for:

- Improper installation; such as vent not pointed vertically down or under a cover, no vent line on underground systems
- Plugged or frozen vent
- Wrong regulator or no regulator in the system
- External corrosion
- Flooded Regulator; water in spring case, regulator submersed on underground tanks
- Regulator age
- Any other condition that could cause the uncontrolled escape of gas

Failure to do the above could result in personal injury or property damage.

Vent Opening

Make sure the regulator vent, vent assembly, or vent line does not become plugged by mud, insects, ice, snow, paint, etc. The vent screen aids in keeping the vent from becoming plugged; the screen should be clean and properly installed.

Water inside Regulators from Floods, Weather or Water Table on Underground Systems

Replace any regulator that has been flooded or has been submersed below the water, has water in the spring case or shows evidence of external or internal corrosion. Checking for internal corrosion on the first stage and integral two-stage of the second stage portion, can be done by removing the closing cap and with the aid of a flashlight observing the condition of the relief valve spring, main spring and internal spring barrel area. A more detailed examination will require shutting down the gas system and the complete removal of the adjusting screw. The second stage regulator must be completely disassembled by a qualified person to look for internal corrosion. Closely examine regulators installed with their vent horizontal for signs of corrosion. Correct any improper installations.

Regulator Replacement

Older regulators are more likely to fail catastrophically because of worn or corroded parts. Replace all regulators over 25 years of age. Other service or environmental conditions may dictate replacement of the regulator before the end of its 25 year service life.

Regulators that are installed on underground systems and in areas that are subject to sea salt (coastal) atmospheres should be inspected annually for external and internal corrosion and may require replacement sooner.

Regulator Repair

Only personnel trained in the proper procedures, codes, standards and regulations of the LP-Gas industry shall install and service this equipment.

Regulators that have been disassembled for repair must be tested for proper operation before being returned to service. Only parts manufactured by MEC should be used to repair MEC regulators. Be sure to give the complete Part Number of the regulator when corresponding with the factory.

The part number, orifice size, and spring range are on a label attached to the spring barrel. The date of manufacture is stamped on the regulator. Always provide this information in any correspondence with your MEC Distributor regarding replacement parts or technical assistance. **If construction changes are made in the field, be sure that the regulator marking is also changed to reflect the most recent construction.**

DOMESTIC - FIRST STAGE

COMPACT MODELS

These first stage regulators are used to reduce LP gas tank pressures for a second stage regulator (normally 10 PSIG). All MEC first stage regulators are red indicating high outlet pressure. Compact First stage regulator vents have 3/8" FNPT tapped ports and E-Z Grip screens located over the outlet. The MEGR222H series offers optimal relief performance that well exceeds UL test requirements providing double failure overpressure protection when used with MEC MEGR622, MEGR642 & MEGR652 Series Second Stage regulators. All MEC Excela-Flo™ domestic regulators feature a 25 year recommended replacement life and our exclusive 3 part tear away leak check adhesive sticker.

MEGR122H-AAJ

MEGR122H Series: Offers a compact first stage regulator design perfect for tight applications such as underground tank domes. They feature an adjustment range from 9-12 PSIG (factory set @ 10 PSIG), stainless steel internal components, fluorocarbon (FKM) seat discs, molded lip fabric reinforced diaphragms and large aluminum precision machined orifice to minimize freeze ups while providing superior downstream regulation and maximum corrosion resistance against weather or contaminated gas.

MEGR222H Series: Offers a compact first stage regulator design perfect for tight applications such as underground tank domes. They feature an adjustment range from 9-12 PSIG (factory set @ 10 PSIG), stainless steel internal components, fluorocarbon (FKM) seat discs, molded lip fabric reinforced diaphragms and large aluminum precision machined orifice to minimize freeze ups while providing superior downstream regulation and maximum corrosion resistance against weather or contaminated gas.

- F. POL inlet version features **NEW** patent pending **anti-freeze heat transfer fins**

SPECIFICATIONS

Tested in the U.S.A

Type: First Stage
Max. Inlet Pressure: 250 PSIG
Exterior Finish: Red Powder Coat
Interior Finish: Red Powder Coat
Orifice Size: 0.15"
Diaphragm: Fabric Reinforced NBR Molded Lip O-Ring Bonnet/Body Seal
Relief Type: Internal Relief - Spring Loaded
Bonnet / Body Material: Die Cast Aluminum
Seat Material: Fluorocarbon (FKM)
Listings: c UL us / UL 144
Mounting Holes: Standard 3-1/2" Center
Pressure Taps: #54 Orifice 1/8" FNPT Plugged (2)
Relief Travel Stop: Molded in Adjustment Cap - Grey

MEGR222H-BGJ

Part No.	Capacity in BTU/H LPG(1)	Inlet	Outlet	Vent Port	Outlet Adj. Range (PSI)	Outlet Set Point (PSI)
MEGR122H-AAJ	1,000,000	1/4" FNPT	1/2" FNPT	3/8" FNPT	8-12	10
MEGR122H-AAJXA(2)	1,000,000	1/4" FNPT	1/2" FNPT	3/8" FNPT	8-12	10
MEGR122H-AAJXB(3)	1,000,000	1/4" FNPT	1/2" FNPT	3/8" FNPT	8-12	10
MEGR222H-BGF	1,000,000	F. POL	1/2" FNPT	3/8" FNPT	9-12	10
MEGR222H-BGFXA(2)	1,000,000	F. POL	1/2" FNPT	3/8" FNPT	9-12	10
MEGR222H-BGFXB(3)	1,000,000	F. POL	1/2" FNPT	3/8" FNPT	9-12	10
MEGR222H-BGJ	1,700,000	F. POL	3/4" FNPT	3/8" FNPT	9-12	10
MEGR222H-BGJXA(2)	1,700,000	F. POL	3/4" FNPT	3/8" FNPT	9-12	10

(1) Based on 30 PSIG Inlet pressure and 20% droop
(2) Indicates regulator vent opposite pressure tap ports
(3) Indicates regulator vent over pressure taps

COMPACT BACK MOUNT

These first stage regulators are used to reduce LP gas tank pressures for a second stage regulator (normally 10 PSIG). All MEC first stage regulators are red indicating high outlet pressure. Compact First stage regulator vents have 3/8" FNPT tapped ports and E-Z Grip screens located over the outlet. The MEGR222H series offers optimal relief performance that well exceeds UL test requirements providing double failure overpressure protection when used with MEC MEGR622, MEGR642 & MEGR652 Series Second Stage regulators. All MEC Excela-Flo™ domestic regulators feature a 25 year recommended replacement life and our exclusive 3 part tear away leak check adhesive sticker.

F. POL outlet version features NEW patent pending anti-freeze heat transfer fins

LEFT IMAGE: MEGR252H-BGF
w/ "snorkled" vent
("snorkled" vent not included)

SPECIFICATIONS

Type: First Stage
Max. Inlet Pressure: 250 PSIG
Exterior Finish: Red Powder Coat
Interior Finish: Red Powder Coat
Orifice Size: 0.17
Diaphragm: Fabric Reinforced NBR Molded Lip O-Ring Bonnet/Body Seal
Relief Type: Internal Relief - Spring Loaded
Bonnet / Body Material: Die Cast Aluminum
Seat Material: Fluorocarbon (FKM)
Listings: c UL us / UL 144
Mounting Holes: Standard 3-1/2" Center
Pressure Taps: #54 Orifice, 1/8" FNPT, Plugged (2)
Relief Travel Stop: Molded in Adjustment Cap - Grey

LEFT IMAGE: MEGR-1252H-BGFXA
w/ ME690 Dielectric Union

MEGR-1252H-BGFXA w/ flexible riser

The MEGR252H Series offers a compact first stage regulator design perfect for tight applications such as underground tank domes. They feature an adjustment range from 9-12 PSIG (factory set @ 10 PSIG), stainless steel internal components, fluorocarbon (FKM) seat discs, molded lip fabric reinforced diaphragms and large aluminum precision machined orifice to mini-mize freeze ups while providing superior downstream regulation and maximum corrosion resistance against weather or contaminated gas. With the outlet located 90 degrees from the inlet this configuration is perfectly oriented to exit the protective shroud of both above and below ground tanks without additional elbow fittings or connections. **The "XA" model** locates the pressure tap ports opposite the vent so that the regulator can be mounted horizontally for easy access and proper downward positioning of the vent opening.

Tested in the U.S.A

Part No.	Capacity in BTU/H LPG(1)	Inlet	Outlet	Outlet Adj. Range (PSI)	Outlet Set Point (PSI)
MEGR252H-BGF	1,400,000	F. POL	1/2" FNPT	9-12	10
MEGR252H-BGFXA(2)	1,400,000	F. POL	1/2" FNPT	9-12	10
MEGR252H-BGJ	1,500,000	F. POL	3/4" FNPT	9-12	10
MEGR252H-BGJXA(2)	1,500,000	F. POL	3/4" FNPT	9-12	10

(1) Based on 30 PSIG Inlet pressure and 20% droop
(2) Indicates vent orientation opposite pressure taps

DOMESTIC - FIRST STAGE

FULL SIZE MODELS

These first stage regulators are used to reduce LP gas tank pressures for a second stage regulator (normally 10 PSIG). All MEC first stage regulators are red indicating high outlet pressure. First stage full size regulator vents have 3/4" FNPT tapped ports and E-Z Grip screens located over the outlet. Both the MEGR122H and the MEGR622H series offer optimal relief performance that exceeds UL test requirements providing double failure overpressure protection when used with MEC MEGR622 & MEGR652 series second stage regulators. All MEC Excela-Flo™ domestic regulators feature a 25 year recommended replacement life and the MEC exclusive tear away leak check adhesive sticker.

MEGR622H Series: Offers all of the same features as the compact MEGR122H Series in a full size version. Our full size MEGR622H Series has a large fabric reinforced diaphragm for superior downstream regulation, heavy duty wrench flats, and a large 3/4" FNPT tapped drip lip vent to help prevent relief vent blockage.

PATENT PENDING

MEGR622H-JGJ

SPECIFICATIONS

Type: First Stage

Max. Inlet Pressure: 250 PSIG

Exterior Finish: Red Powder Coat

Interior Finish: Red Powder Coat

Orifice Size: 0.219"

Diaphragm: Fabric Reinforced NBR Molded Lip O-Ring Bonnet/Body Seal

Relief Type: Internal Relief - Spring Loaded

Bonnet / Body Material: Die Cast Aluminum

Seat Material: Fluorocarbon (FKM)

Listings: c UL us / UL 144

Mounting Holes: Standard 3-1/2" Center

Pressure Taps: #54 Orifice, 1/8" FNPT, Plugged (2)

Relief Travel Stop: Molded in Adjustment Cap - Black

Tested in the U.S.A

PATENT PENDING

MEGR622H-DGJ

Part No.	Capacity in BTU/H LPG(1)	Inlet	Outlet	Vent Port	Outlet Adj. Range (PSI)	Outlet Set Point (PSI)
MEGR622H-BGJ	2,200,000	1/2" FNPT	1/2" FNPT	3/4" FNPT	8-12	10
MEGR622H-DGJ	2,500,000	3/4" FNPT	3/4" FNPT	3/4" FNPT	8-12	10
MEGR622H-HGJ	2,300,000	F. POL	1/2" FNPT	3/4" FNPT	8-12	10
MEGR622H-JGJ	2,750,000	F. POL	3/4" FNPT	3/4" FNPT	8-12	10

(1) Based on 30 PSIG Inlet pressure and 20% droop

DOMESTIC - FIRST STAGE

5 PSI OUTLET PRESSURE

These first stage regulators are used to reduce LP gas tank pressures for a second stage regulator (5 PSIG). All MEC first stage regulators are red indicating high outlet pressure. First stage regulator vents have 3/4" FNPT tapped ports and E-Z Grip screens located over the outlet. The MEGR622H series offer optimal relief performance that well exceeds UL test requirements providing double failure overpressure protection when used with MEC MEGR622, MEGR642 & MEGR652 Series Second Stage regulators. All MEC Excela-Flo™ domestic regulators feature a 25 year recommended replacement life and our exclusive tear away leak check adhesive sticker.

Part No.	Type	Capacity in BTU/H LPG(1)	Inlet	Outlet	Outlet Adj. Range (PSI)	Outlet Set Point (PSI)
MEGR622H-BGK	Full Size	2,100,000	1/2" FNPT	1/2" FNPT	4-6	5
MEGR622H-HGK	Full Size	2,200,000	F. POL	1/2" FNPT	4-6	5
MEGR622H-JGK	Full Size	2,650,000	F. POL	3/4" FNPT	4-6	5

(1) Based on 30 PSIG inlet pressure and 20% droop.

Tested in the U.S.A

DOMESTIC - FIRST STAGE

FEMALE POL TEE INLET

These first stage F. POL tee inlet regulators are used to reduce LP gas tank pressures for a second stage regulator (normally 10 PSIG) in a multiple tank manifold installation without adapters or tees. All MEC first stage regulators are red indicating high outlet pressure. Compact First stage regulator vents have 3/8" FNPT tapped ports and E-Z Grip screens located over the outlet. The MEGR222HT series offers optimal relief performance that well exceeds UL test requirements providing double failure overpressure protection when used with MEC MEGR622, MEGR642 & MEGR652 Series Second Stage regulators. All MEC Excela-Flo™ domestic regulators feature a 25 year recommended replacement life and our exclusive tear away leak check adhesive sticker.

PATENT PENDING

MEGR222HT Compact Tee Inlet Series

SPECIFICATIONS

Type: First Stage
Max. Inlet Pressure: 250 PSIG
Exterior Finish: Red Powder Coat
Interior Finish: Red Powder Coat
Orifice Size: 0.15" (Compact) & 0.219" Full
Diaphragm: Fabric Reinforced NBR Molded Lip O-Ring Bonnet/Body Seal
Relief Type: Internal Relief - Spring Loaded
Bonnet / Body Material: Die Cast Aluminum
Seat Material: Fluorocarbon (FKM)
Listings: c UL us / UL 144
Mounting Holes: Standard 3-1/2" Center
Pressure Taps: #54 Orifice 1/8" FNPT Plugged (2)
Relief Travel Stop: Molded in Adjustment Cap - Gray (Compact), Black (Full Size)

Tested in the U.S.A

Part No.	Type	Capacity in BTU/H LPG(1)	Inlet	Outlet	Outlet Adj. Range (PSI)	Outlet Set Point (PSI)
MEGR222HT-BGF	Compact	1,000,000	F. POL/Tee	1/2" FNPT	8-12	10
MEGR622HT-HGJ	Full	2,300,000	F. POL/Tee	1/2" FNPT	8-12	10
MEGR622HT-JGJ	Full	2,750,000	F. POL/Tee	3/4" FNPT	8-12	10

(1) Based on 30 PSIG Inlet pressure and 20% droop

SENTINEL DIELECTRIC INLET

PATENT PENDING

MEGR222D/MEGR622D
Compact/Full Size Series

PATENT PENDING

MEGR252D
Compact Back Mount

PATENT PENDING

MEGR642D
Full Size Series

PATENT PENDING

MEGR652D
Back Mount Series

SENTINEL Series Second Stage Dielectric Regulators are used to reduce outlet pressures from first stage regulators (normally 10 PSI) to 11" WC in domestic installations. All MEC SENTINEL Series second stage regulators are green with yellow inlet connections indicating low outlet pressure and dielectric separation. Second stage regulator vents have FNPT drip lip tapped ports and our exclusive E-Z grip screens located over the inlet. All MEC Sentinel Series second stage domestic regulators feature an all stainless steel inlet filter screen to reduce debris from passing through the regulator. Both the MEGR622D and the MEGR652D Series regulators offer optimal relief performance that well exceeds UL test requirements providing double failure overpressure protection (no more than 2 PSI downstream pressure) when used with MEGR122H, MEGR222H and MEGR622H Series First Stage regulators. All MEC Excela-Flo™ domestic regulators feature a 25 year recommended replacement life and our exclusive tear away leak check adhesive sticker.

SENTINEL Series Second Stage Dielectric Regulators feature an integral dielectric inlet connection designed to isolate upstream metallic piping from electrical current prior to piping entering a building in complaince with NFPA58 - 2017 section 6.11.316. Since the FNPT inlet serves as the dielectric separation media, any standard MNPT threaded connector or valve can be installed without a separate dielectric union. Both compact and full size models feature the same basic footprint measurement from inlet to outlet, as all standard Excela-Flo™ second stage regulators, making it ideal for regulator change-outs.

MEGR622D & MEGR652D Series feature inlet and outlets that are inline, while the MEGR252D and MEGR652D offer a convenient rear back mount discharge outlet. The MEGR642D Series offers a side discharge located 90 degrees from the inlet making it ideal for installations with horizontal piping including those with vapor metering systems.

SPECIFICATIONS

Type: Second Stage
Max. Inlet Pressure: 10 PSIG
Exterior Finish: Green Powder Coat Body and Yellow Powder Coat Inlet
Interior Finish: Green Powder Coat
Orifice Size: Compact - .14" (BAF), 0.17" (CFF & DFF) / Full - 0.219"
Diaphragm: Fabric Reinforced (NBR) Molded Lip O-Ring Bonnet/Body Seal
Relief Type: Internal Relief - Spring Loaded
Bonnet / Body Material: Die Cast Aluminum
Seat Material: Fluorocarbon (FKM)
Listings: c UL us / UL 144
Mounting Holes: Standard 3-1/2" Center
Pressure Taps: #54 Orifice 1/8" FNPT Plugged (2)
Relief Travel Stop: Molded In Adjustment Cap - Black (Full Size), Gray (Compact)

Tested in the U.S.A

Part No.	Type	Capacity in BTU/H LPG(1)	Inlet	Outlet	Outlet Adj. Range ("WC)	Outlet Set Point ("WC)
MEGR222D-BAF	Compact	500,000	1/2" FNPT	1/2" FNPT	9.5-13	11
MEGR222D-CFF	Compact	800,000	1/2" FNPT	3/4" FNPT	9.5-13	11
MEGR222D-DFF	Compact	800,000	3/4" FNPT	3/4" FNPT	9.5-13	11
MEGR252D-BAF(2)	Compact Back Mount	500,000	1/2" FNPT	1/2" FNPT	9.5-13	11
MEGR252D-CFF(2)	Compact Back Mount	650,000	1/2" FNPT	3/4" FNPT	9.5-13	11
MEGR252D-DFF (2)	Compact Back Mount	700,000	3/4" FNPT	3/4" FNPT	9.5-13	11
MEGR622D-BCF	Full Size	710,000	1/2" FNPT	1/2" FNPT	9-13	11
MEGR622D-CFF	Full Size	1,300,000	1/2" FNPT	3/4" FNPT	9-13	11
MEGR622D-DFF	Full Size	1,300,000	3/4" FNPT	3/4" FNPT	9-13	11
MEGR642D-DFF (3)	Full Size	900,000	3/4" FNPT	3/4" FNPT	9-13	11
MEGR652D-CFF (2)	Full Size Back Mount	1,000,000	1/2" FNPT	3/4" FNPT	9-13	11
MEGR652D-DFF(2)	Full Size Back Mount	1,000,000	3/4" FNPT	3/4" FNPT	9-13	11

(1) Based on 10 PSIG inlet pressure and 20% droop (2) Indicates back mount configuration (3) Indicates side discharge configuration

DOMESTIC - SECOND STAGE

COMPACT MODELS

These compact second stage regulators are used to reduce outlet pressures from first stage regulators (normally 10 PSI) to 11" WC in domestic installations. All MEC second stage regulators are green indicating low outlet pressure. Compact second stage regulator vents have 3/8" FNPT tapped ports and our exclusive E-Z grip screens located over the inlet. All MEC second stage domestic regulators feature a stainless steel inlet filter screen to reduce debris from passing through the regulator. All MEC Excela-Flo™ domestic regulators feature a 25 year recommended replacement life and our exclusive 3-part tear away leak check adhesive sticker.

PATENT PENDING

MEGR222 Series

MEGR222 & MEGR252 Series: Offers a compact second stage regulator design perfect for lower to intermediate BTU applications. They feature an adjustable range from 9.5-13" WC (factory set @ 11" WC), stainless steel internal components, fluorocarbon (FKM) seat discs, molded lip fabric reinforced diaphragms and large aluminum precision machined orifices providing superior down-stream regulation and maximum corrosion resistance against weather or contaminated gas. The MEGR222 Series have both the inlet and outlet in line where the MEGR252 series have a rear discharge back mount outlet for convenient wall mount applications.

- **NEW** patent pending **anti-freeze heat transfer fins**

NEW FEATURE!

PATENT PENDING

SPECIFICATIONS

Type: Second Stage
Max. Inlet Pressure: 10 PSIG
Exterior Finish: Green Powder Coat
Interior Finish: Green Powder Coat
Orifice Size: 0.14" (BAF), 0.17" (CFF & DFF)
Diaphragm: Fabric Reinforced (NBR) Molded Lip O-Ring Bonnet Body Seal
Relief Type: Internal Relief - Spring Loaded
Bonnet / Body Material: Die Cast Aluminum
Seat Material: Fluorocarbon (FKM)
Listings: c UL us / UL 144
Mounting Holes: Standard 3-1/2" Center
Pressure Taps: #54 Orifice 1/8" FNPT Plugged (2)
Relief Travel Stop: Molded In Adjustment Cap - Gray

Tested in the U.S.A

MEGR252 Back Mount

Part No.	Type	Capacity in BTU/H LPG(1)	Inlet	Outlet	Outlet Adj. Range ("WC)	Outlet Set Point ("WC)
MEGR222-BAF	Top Mount	450,000	1/2" FNPT	1/2" FNPT	9.5-13	11
MEGR222-CFF	Top Mount	800,000	1/2" FNPT	3/4" FNPT	9.5-13	11
MEGR222-DFF	Top Mount	800,000	3/4" FNPT	3/4" FNPT	9.5-13	11
MEGR252-BAF(2)	Back Mount	500,000	1/2" FNPT	1/2" FNPT	9.5-13	11
MEGR252-CFF(2)	Back Mount	650,000	1/2" FNPT	3/4" FNPT	9.5-13	11
MEGR252-DFF(2)	Back Mount	700,000	3/4" FNPT	3/4" FNPT	9.5-13	11

(1) Based on 10 PSIG inlet pressure and 20% droop
(2) Indicates back mount configuration
(3) Indicates vent over outlet

FULL SIZE MODELS

These second stage regulators are used to reduce outlet pressures from first stage regulators (normally 10 PSI) to 11" WC in domestic installations. All MEC second stage regulators are green indicating low outlet pressure. Second stage full size regulator vents have 3/4"FNPT tapped ports and our exclusive E-Z grip screens located over the inlet. All MEC second stage domestic regulators feature a stainless steel inlet filter screen to reduce debris from passing through the regulator. Both the MEGR622 and the MEGR652 Series offer optimal relief performance that exceeds UL test requirements providing double failure overpressure protection (no more than 2 PSI downstream pressure) when used with MEGR122H and MEGR622H Series First Stage regulators. All MEC Excela-Flo™ domestic regulators feature a 25 year recommended replacement life and our exclusive tear away leak check adhesive sticker.

MEGR622 & MEGR652 Series:

Offers all of the same features as the compact MEGR122 Series but in a full size, high capacity version. Our full size second stage regulators have a large fabric reinforced diaphragm for superior downstream regulation, heavy duty wrench flats, and a large 3/4" FNPT tapped drip lip vent to help prevent relief valve blockage. The MEGR622 Series have both the inlet and outlet in line where the MEGR652 series have a rear discharge back mount outlet for convenient wall mount applications.

PATENT PENDING

MEGR622 Full Size Series

SPECIFICATIONS

Type: Second Stage
Max. Inlet Pressure: 10 PSIG
Exterior Finish: Green Powder Coat
Interior Finish: Green Powder Coat
Orifice Size: 0.219"
Diaphragm: Fabric Reinforced (NBR) Molded Lip O-Ring
Bonnet Body Seal
Relief Type: Internal Relief - Spring Loaded
Bonnet / Body Material: Die Cast Aluminum
Seat Material: Fluorocarbon (FKM)
Listings: c UL us / UL 144
Mounting Holes: Standard 3-1/2" Center
Pressure Taps: #54 Orifice 1/8" FNPT Plugged (2)
Relief Travel Stop: Molded In Adjustment Cap - Black

Tested in the U.S.A

PATENT PENDING

MEGR652 Back Mount Series

Part No.	Type	Capacity in BTU/H LPG(1)	Inlet	Outlet	Outlet Adj. Range ("WC)	Outlet Set Point ("WC)
MEGR622-BCF	Top Mount	710,000	1/2" FNPT	1/2" FNPT	9-13	11
MEGR622-CFF	Top Mount	1,300,000	1/2" FNPT	3/4" FNPT	9-13	11
MEGR622-CFFXO(3)	Top Mount	1,300,000	1/2" FNPT	3/4" FNPT	9-13	11
MEGR622-DFF	Top Mount	1,300,000	3/4" FNPT	3/4" FNPT	9-13	11
MEGR622-DFFXO (3)	Top Mount	1,300,000	3/4" FNPT	3/4" FNPT	9-13	11
MEGR652-CFF (2)	Back Mount	1,000,000	1/2" FNPT	3/4" FNPT	9-13	11
MEGR652-DFF (2)	Back Mount	1,000,000	3/4" FNPT	3/4" FNPT	9-13	11

(1) Based on 10 PSIG inlet pressure and 20% droop
(2) Indicates back mount configuration
(3) Indicates vent over outlet

DOMESTIC - SECOND STAGE

SIDE OUTLET

These second stage regulators are used to reduce outlet pressures from first stage regulators (normally 10 PSI) to 11" WC in domestic installations. All MEC second stage regulators are green indicating low outlet pressure. Second stage regulator vents have 3/4"FNPT tapped ports and our exclusive E-Z grip screens located over the inlet. All MEC second stage domestic regulators feature a stainless steel inlet filter screen to reduce debris from passing through the regulator. The MEGR642 Series offers optimal relief performance that well exceeds UL test requirements providing double failure overpressure protection (no more than 2 PSI downstream pressure) when used with MEGR122H, MEGR222H and MEGR622H Series First Stage regulators. All MEC Excela-Flo™ domestic regulators feature a 25 year recommended replacement life and our exclusive tear away leak check adhesive sticker.

MEGR642 Series: Features an adjustable range from 9-13" WC (factory set @ 11" WC), stainless steel internal components, fluorocarbon (FKM) seat discs, molded lip fabric reinforced diaphragms and large aluminum precision machined orifices providing superior downstream regulation and maximum corrosion resistance against weather or contaminated gas.

Our full size second stage regulators have a large fabric reinforced diaphragm for superior downstream regulation, heavy duty wrench flats, and a large 3/4" FNPT tapped drip lip vent to help prevent relief valve blockage. The MEGR642 Series has the outlet at 90 degrees from the inlet making it ideal for vapor meter installations.

SPECIFICATIONS

Type: Second Stage
Max. Inlet Pressure: 10 PSIG
Exterior Finish: Green Powder Coat
Interior Finish: Green Powder Coat
Orifice Size: 0.219" (Full)
Diaphragm: Fabric Reinforced (NBR) Molded Lip O-Ring Bonnet / Body Seal
Relief Type: Internal Relief - Spring Loaded
Bonnet / Body Material: Die Cast Aluminum
Seat Material: Fluorocarbon (FKM)
Listings: c UL us / UL 144
Mounting Holes: Standard 3-1/2" Center
Pressure Taps: #54 Orifice 1/8" FNPT Plugged (2)
Relief Travel Stop: Molded In Adjustment Cap - Black

PATENT PENDING

MEGR642-DFF

Tested in the U.S.A

MEC Excela-Flo Second Stage Domestic Regulators						
Part No.	Type	Capacity in BTU/H LPG(1)	Inlet	Outlet	Outlet Adj. Range ("WC)	Outlet Set Point ("WC)
MEGR642-DFF(2)	Full Size Side Outlet	900,000	3/4" FNPT	3/4" FNPT	9-13	11

(1) Based on 10 PSIG inlet pressure and 20% droop
(2) Indicates side outlet configuration

UNIVERSAL REGULATOR BRACKET

Universal Slotted H Style Bracket for both full size and compact MEC Excela-Flo™ domestic regulators

FEATURES

- Anodized aluminum stamping for maximum strength and durability
- Slotted and elongated regulator mounting holes for quick, convenient and secure regulator retention
- Multiple screw holes for easy and reliable building/structure installation

MEGR100C

SENTINEL 2 PSI DIELECTRIC INLET

SENTINEL Series 2 PSI Second Stage Dielectric Regulators are used to reduce outlet pressures from first stage regulators (normally 10 PSI) to nominal 2 PSI in domestic installations. 2 PSI service regulators are used in conjunction with an LPG line regulator either at the indoor appliance or a remote manifold distribution header inlet. All MEC SENTINEL 2 PSI Series second stage regulators are white with yellow inlet connections indicating 2 PSI outlet pressure and dielectric separation. 2 PSI service regulators have 3/4" FNPT tapped vents and our exclusive E-Z grip screens located over the inlet. All MEC SENTINEL Series 2 PSI SERVICE regulators feature an all stainless steel inlet filter screen to reduce debris from passing through the regulator. Both the **MEGR622ED** and the **MEGR652ED** Series regulators offer optimal relief performance that well exceeds UL test requirements. All MEC Excela-Flo™ domestic regulators feature a 25 year recommended replacement life and our exclusive tear away leak check adhesive sticker.

SENTINEL Series 2 PSI Second Stage Dielectric Regulators feature an integral dielectric inlet connection designed to isolate upstream metallic piping from electrical current prior to piping entering a building in complaince with NFPA58 - 2017 section 6.11.316. Since the FNPT inlet serves as the dielectric separation media, any standard MNPT threaded connector or valve can be installed without a separate dielectric union. All models feature the same basic footprint measurement from inlet to outlet as standard Excela-Flo™ Second Stage regulators, making it ideal for regulator change-outs.

PATENT PENDING

MEGR622ED Series
features an inline inlet and outlet orientation.

PATENT PENDING

MEGR652ED-DFH
Features a rear discharge back mount outlet for convenient wall mount applications.

Tested in the U.S.A

SPECIFICATIONS

Type: 2 PSI
Max. Inlet Pressure: 10 PSIG
Exterior Finish: White Coat Body and Yellow Powder Coat Inlet
Interior Finish: White Powder Coat
Orifice Size: 0.219"
Diaphragm: Fabric Reinforced (NBR) Molded Lip O-Ring Bonnet/Body Seal
Relief Type: Internal Relief - Spring Loaded
Bonnet / Body Material: Die Cast Aluminum
Seat Material: Fluorocarbon (FKM)
Listings: c UL us / UL 144
Mounting Holes: Standard 3-1/2" Center
Pressure Taps: #54 Orifice 1/8" FNPT Plugged (2)
Relief Travel Stop: Molded In Adjustment Cap - Black

Part No.	Type	Capacity in BTU/H LPG(1)	Inlet	Outlet	Vent Port	Outlet Adj. Range (PSI)	Outlet Set Point (PSI)
MEGR622ED-BCH	Full Size	1,100,000	1/2" FNPT	1/2" FNPT	3/4" FNPT	1.0 - 2.2	2
MEGR622ED-DCH	Full Size	1,400,000	3/4" FNPT	3/4" FNPT	3/4" FNPT	1.0 - 2.2	2
MEGR652ED-DFH (2)	Full Size Back Mount	1,300,000	3/4" FNPT	3/4" FNPT	3/4" FNPT	1.0 - 2.2	2

(1) Based on 10 PSIG inlet pressure and 20% droop
(2) Indicates back mount configuration

2 PSI OUTLET

These 2 PSI service regulators are used to reduce outlet pressures from first stage regulators (normally 10 PSI) to a nominal 2 PSI. 2 PSI service regulators are used in conjunction with an LPG line regulator either at the indoor appliance or a remote manifold distribution header inlet. All MEC 2 PSI service regulators are white with black adjustment caps. The full size 2 PSI service regulators have 3/4" FNPT tapped vents and our exclusive E-Z grip screens located over the inlet. All MEC 2 PSI service regulators feature a stainless steel inlet filter screen to reduce debris from passing through the regulator. Both the MEGR622E and MEGR652E series offer optimal relief performance that exceeds UL test requirements. All MEC Excela-Flo™ domestic regulators feature a 25 year recommended replacement life and our exclusive tear away leak check adhesive sticker.

MEGR622E Series:

Offers a full size high capacity molded lip fabric reinforced diaphragm, stainless steel internal components, fluorocarbon (FKM) seat discs, precision machined aluminum orifices, and an adjustment range from 1.0-2.2 PSI (factory set @ 2 PSI) providing superior downstream regulation and maximum corrosion resistance against weather or contaminated gas.

SPECIFICATIONS

Type: Second Stage 2 PSI
Max. Inlet Pressure: 10 PSI
Exterior Finish: White Powder Coat
Interior Finish: White Powder Coat
Orifice Size: 0.219"
Seat Material: Fluorocarbon (FKM)
Diaphragm: Fabric Reinforced (NBR) / Molded Lip O-Ring Bonnet/Body Seal
Relief Type: Internal Relief - Spring Loaded
Bonnet / Body Material: Die Cast Aluminum
Listings: c UL us / UL 144
Mounting Holes: Standard 3-1/2" Center
Pressure Taps: #54 Orifice, 1/8" FNPT, Plugged (2)
Relief Travel Stop: Molded in Adjustment Cap - Black

Tested in the U.S.A

MEGR652E Series:

Offers all of the same features as the MEGR-1622E Series but with a rear discharge back mount outlet for convenient wall mount applications.

Part No.	Type	Capacity in BTU/H LPG(1)	Inlet	Outlet	Vent Port	Outlet Adj. Range (PSI)	Outlet Set Point (PSI)
MEGR622E-BCH	Full Size	1,100,000	1/2" FNPT	1/2" FNPT	3/4" FNPT	1.0-2.2	2
MEGR622E-DCH	Full Size	1,400,000	3/4" FNPT	3/4" FNPT	3/4" FNPT	1.0-2.2	2
MEGR652E-DFH(2)	Full Size Back Mount	1,300,000	3/4" FNPT	3/4" FNPT	3/4" FNPT	1.0-2.2	2

(1) Based on 10 PSIG inlet pressure and 20% droop.
(2) Indicates back mount configuration.

DOMESTIC - INTEGRAL TWO-STAGE

COMPACT MODELS

These Integral Two-Stage regulators combine the first and second stage regulator set-up into one convenient unit converting tank pressure to 11" WC. All MEC Integral Two-Stage domestic regulators are gray indicating low outlet pressure. Integral Two-Stage regulators are recommended for installations with short piping distances, but provide the same advantages of two-stage regulation with a single unit. All MEC integral two-stage regulator vent have tapped ports (7/16-24 - First Stage) (3/8" FNPT - Second Stage) and our exclusive E-Z Grip screens located over the outlet. The MEGR232 series offer optimal relief performance that well exceeds UL test requirements providing over pressure protection of no more than 2 PSI downstream pressure. MEC Excela-Flo™ Integral Two-Stage domestic regulators feature a 25 year recommended replacement life, our exclusive Tri-Tap™ (tank, 10 PSI, 11" WC) pressure port system and our exclusive 3-part tear away leak check adhesive sticker.

MEGR232 Compact Series: Offers a compact integral two-stage regulator design perfect for lower BTU applications and confined spaces. They feature an adjustment range from 9-13" WC (factory set @ 11" WC). Stainless steel integral components, fluorocarbon (FKM) seat discs, molded lip fabric reinforced diaphragms, and large precision machined aluminum orifices providing superior downstream regulation and maximum corrosion resistance against weather or contaminated gas.

- **NEW** patent pending **anti-freeze heat transfer fins**

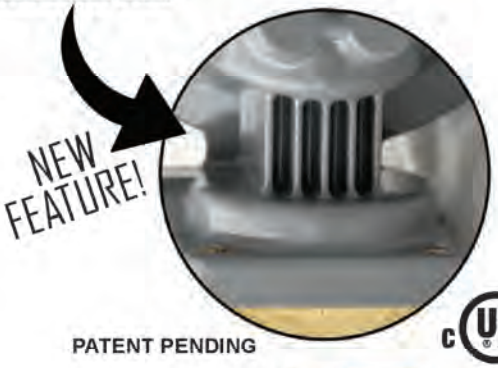

PATENT PENDING

c UL us

Tested in the U.S.A

SPECIFICATIONS

Type: Integral Two-Stage
Max. Inlet Pressure: 250 PSIG
Exterior Finish: Gray Powder Coat
Interior Finish: Gray Powder Coat
Orifice Size: 0.170"
Seat Material: Fluorocarbon (FKM)
Diaphragm: Fabric Reinforced NBR / Molded Lip O-Ring Bonnet Body Seal
Relief Type: Internal Relief - Spring Loaded
Bonnet / Body Material: Die Cast Aluminum
Listings: c UL us / UL 144
Mounting Holes: Standard 3-1/2" Center
Pressure Taps: #54 Orifice, 1/8" FNPT, Plugged (3)
Relief Travel Stop: Molded in Adjustment Cap - Gray

Part No.	Capacity in BTU/H LPG(1)	Inlet	Outlet	Outlet Adj. Range ("WC)	Outlet Set Point ("WC)
MEGR232-BBF	450,000	1/4" FNPT	1/2" FNPT	9.5-13	11
MEGR232-BBFXA(2)	450,000	1/4" FNPT	1/2" FNPT	9.5-13	11
MEGR232-HBF	450,000	F. POL	1/2" FNPT	9.5-13	11
MEGR232-HBFXA(2)	450,000	F. POL	1/2" FNPT	9.5-13	11
MEGR232-HFF	625,000	F. POL	3/4" FNPT	9.5-13	11
MEGR232-HFFXA(2)	625,000	F. POL	3/4" FNPT	9.5-13	11
MEGR232-HFFXB(3)	625,000	F. POL	3/4" FNPT	9.5-13	11

(1) Based on 30 PSIG inlet pressure and 20% droop
(2) Indicates regulator vents opposite pressure tap ports
(3) Indicates regulator vents over pressure tap ports

Accessories	
Part No.	**Description**
MEP1632	MEC Excela-Flo™ Integral Twin Stage - First Stage Vent Guard
ME2130	First Stage Pipe Away Elbow 1/4" M. Inverted Flare x 1/4" F. Inverted Flare

FULL SIZE MODELS

These integral two-stage regulators combine the first and second stage regulator set-up into one convenient unit converting full tank pressure to 11" WC. All MEC integral two-stage domestic regulators are gray indicating low outlet pressure. Integral two-stage regulators are recommended for installations with short piping distances, but provide the same advantages of two-stage regulation with a single unit. All MEC integral two-stage regulator vent have tapped ports (7/16 -24-First Stage) (3/8" FNPT Second Stage Compact / 3/4" FNPT Second Stage Full Size) and our exclusive E-Z Grip screens located over the outlet. Both the MEGR232 and MEGR632 series offer optimal relief performance that exceeds UL test requirements providing over pressure protection of no more than 2 PSI downstream pressure. MEC Excela-Flo™ integral two-stage domestic regulators feature a 25 year recommended replacement life, our exclusive Tri-Tap™ (Tank, 10 PSI, 11" WC) pressure port system and tear away leak check adhesive sticker.

PATENT PENDING

MEGR632-CFF

MEGR632 Series: Offers all of the same features as the compact MEGR232 series in a full size high capacity version. The full size MEGR632 diaphragm provides superior downstream regulation, has heavy duty wrench flats and a large 3/4" FNPT tapped drip lip vent to help prevent relief vent blockage.

SPECIFICATIONS

Tested in the U.S.A

Type: Integral Two-Stage
Max. Inlet Pressure: 250 PSIG
Exterior Finish: Gray Powder Coat
Interior Finish: Gray Powder Coat
Orifice Size: 0.219"
Seat Material: Fluorocarbon (FKM)
Diaphragm: Fabric Reinforced NBR / Molded Lip O-Ring Bonnet Body Seal
Relief Type: Internal Relief - Spring Loaded
Bonnet / Body Material: Die Cast Aluminum
Listings: c UL us / UL 144
Mounting Holes: Standard 3-1/2" Center
Pressure Taps: #54 Orifice, 1/8" FNPT, Plugged (3)
Relief Travel Stop: Molded in Adjustment Cap - Black

PATENT PENDING

MEGR632-JFF

Part No.	Capacity in BTU/H LPG(1)	Inlet	Outlet	Vent Port	Outlet Adj. Range ("WC)	Outlet Set Point ("WC)
MEGR632-BCF	700,000	1/4" FNPT	1/2" FNPT	3/4" FNPT	9-13	11
MEGR632-BCFXA(2)	700,000	1/4" FNPT	1/2" FNPT	3/4" FNPT	9-13	11
MEGR632-CFF	950,000	1/4" FNPT	3/4" FNPT	3/4" FNPT	9-13	11
MEGR632-CFFXA(2)	950,000	1/4" FNPT	3/4" FNPT	3/4" FNPT	9-13	11
MEGR632-HCF	700,000	F. POL	1/2" FNPT	3/4" FNPT	9-13	11
MEGR632-HCFXA(2)	700,000	F. POL	1/2" FNPT	3/4" FNPT	9-13	11
MEGR632-JFF	900,000	F. POL	3/4" FNPT	3/4" FNPT	9-13	11
MEGR632-JFFXA(2)	900,000	F. POL	3/4" FNPT	3/4" FNPT	9-13	11
MEGR632-JFFXB(3)	900,000	F. POL	3/4" FNPT	3/4" FNPT	9-13	11

(1) Based on 30 PSIG inlet pressure and 20% droop
(2) Indicates regulator vents opposite pressure tap ports
(3) Indicates regulator vents over pressure tap ports

Accessories	
Part No.	
MEP1632	MEC Excela-Flo™ Integral Twin Stage - First Stage Vent Guard
ME2130	First Stage Pipe Away Elbow 1/4" M. Inverted Flare x 1/4" F. Inverted Flare

DOMESTIC - INTEGRAL TWO-STAGE

FIRST STAGE VENT GUARD

The MEP1632, when installed properly into the first stage vent opening of any MEC™ MEGR232 or MEGR632 Series Integral Two Stage Excela-Flo™ regulator, completely seals this port making it weather proof by preventing moisture from entering the vent portion of the regulator. Installing the MEP1632 meets all NFPA58 requirements for vent protection from elements on all MEC Excela-Flo™ integral twin stage first stage regulator vent openings no matter whether it is exposed or under a cover. Orienta-tion of the second stage regulator vent opening must stay facing vertically down or piped away per MEC™ regulator installation and operating instructions.

MEP1632 - Installed in MEGR632 Series
Full Size Twin-Stage Regulator

MEP1632 Kit w/ instructions

*Regulator not included

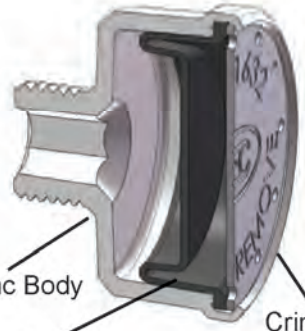

Part No.	Description
MEP1632	MEC Excela-Flo™ Integral Twin Stage - First Stage Vent Guard

SPECIFICATIONS

- 7/16-24 UN threaded connection
- Anodized zinc die-cast body for maximum strength and durability
- Convenient wrenching flats for easy installation
- Supplied with sealing o-ring and installation instructions
- Sealed and crimped vulcanized diaphragm for leak & worry free service
- Does not restrict flow or impact regulator performance when installed properly

Flex-Vent™ REGULATOR KIT

The MEC *Flex-Vent*™ provides a safe and easy solution to vent LP Gas regulators away from open sources of ignition or other potential fire hazards. Meets all requirements of the new flexible material allowance in the 2011 NFPA-58, section 5.8.3.1 (3).

FEATURES

- Durable, UV stable flexible PVC hose material suitable for use with LP Gas vapor
- 3/4" NPT swivel inlet for easy installation
- Standard 90° vent assembly with screen
- Mounting clamps and coated masonry screws supplied
- Crimped ends for maximum durability
- Available in 3, 4, 6 & 10 ft. lengths*

ME900-6

Part No.	Description	Accessories
ME960-36	MEC *Flex-Vent* Kit - Fixed Ends - 3 ft.	90° Regulator Vent Assembly ME900-6
ME960-48	MEC *Flex-Vent* Kit - Fixed Ends - 4 ft.	
ME960-72	MEC *Flex-Vent* Kit - Fixed Ends - 6 ft.	
ME960-120	MEC *Flex-Vent* Kit - Universal Outlet (not crimped) - 10 ft.	
ME960-120C	MEC *Flex-Vent* Kit - Universal Outlet (crimped) - 10 ft.	

TEE INLET

These Integral Two-Stage regulators combine the first and second stage regulator set-up into one convenient unit converting tank pressure to 11" WC with the convenience of a F. POL Tee inlet for multiple tank applications. All MEC Integral Two-Stage domestic regulators are gray indicating low outlet pressure. Integral Two-Stage regulators are recommended for installations with short piping distances, but provide the same advantages of two-stage regulation with a single unit. All MEC Integral Two-Stage regulator vent have tapped ports (7/16-24 - First Stage) (3/4" FNPT - Second Stage) and our exclusive E-Z Grip screens located over the outlet. Both the MEGR232T and MEGR632T series offer optimal relief performance that well exceeds UL test requirements providing over pressure protection of no more than 2 PSI downstream pressure. MEC Excela-Flo™ integral two-stage domestic regulators feature a 25 year recommended replacement life, our exclusive Tri-Tap™ (tank, 10 PSI, 11" WC) pressure port system and tear away leak check adhesive sticker.

NOTE: All models available in "XA" configuration with both first & second stage vents located opposite pressure taps and tee inlets perpendicular to vents specifically for horizontal installation.

MEGR232T Compact Series: Offers a compact integral two-stage regulator design perfect for lower BTU applications and confined spaces. They feature an adjustment range from 9-13" WC (factory set @ 11" WC). Stainless steel integral components, fluorocarbon (FKM) seat discs, molded lip fabric reinforced diaphragms, and large precision machined aluminum orifices providing superior downstream regulation and maximum corrosion resistance against weather or contaminated gas.

SPECIFICATIONS

Tested in the U.S.A

Type: Integral Two-Stage
Max. Inlet Pressure: 250 PSIG
Exterior Finish: Gray Powder Coat
Interior Finish: Gray Powder Coat
Orifice Size: 0.17" (Compact) & 0.219" (Full)
Seat Material: Fluorocarbon (FKM)
Diaphragm: Fabric Reinforced NBR / Molded Lip O-Ring Bonnet/Body Seal
Relief Type: Internal Relief - Spring Loaded
Bonnet / Body Material: Die Cast Aluminum
Listings: c UL us / UL 144
Mounting Holes: Standard 3-1/2" Center
Pressure Taps: #54 Orifice 1/8" FNPT Plugged (3)
Relief Travel Stop: Molded in Adjustment Cap - Gray (Compact), Black (Full Size)

MEGR632T Full Size Series: Offers all of the same features as the compact MEGR232 series in a full size high capacity version. The full size MEGR632 diaphragm provides superior downstream regulation, has heavy duty wrench flats and a large 3/4" FNPT tapped drip lip vent to help prevent relief vent blockage.

Part No.	Type	Capacity in BTU/H LPG(1)	Inlet	Outlet	Outlet Adj. Range ("WC)	Outlet Set Point ("WC)
MEGR232T-HBF	Compact	450,000	F. POL Tee	1/2" FNPT	9.5-13	11
MEGR232T-HBFXA(2)	Compact	450,000	F. POL Tee	1/2" FNPT	9.5-13	11
MEGR232T-HFF	Compact	625,000	F. POL Tee	3/4" FNPT	9.5-13	11
MEGR232T-HFFXA(2)	Compact	625,000	F. POL Tee	3/4" FNPT	9.5-13	11
MEGR632T-HCF	Full Size	700,000	F. POL Tee	1/2" FNPT	9-13	11
MEGR632T-HCFXA(2)	Full Size	700,000	F. POL Tee	1/2" FNPT	9-13	11
MEGR632T-JFF	Full Size	900,000	F. POL Tee	3/4" FNPT	9-13	11
MEGR632T-JFFXA(2)	Full Size	900,000	F. POL Tee	3/4" FNPT	9-13	11

(1) Based on 30 PSIG inlet pressure and 20% droop
(2) Indicates regulator vents opposite pressure tap ports

Accessories	
Part No.	Description
MEP1632	MEC Excela-Flo™ Integral Twin Stage - First Stage Vent Guard
ME2130	First Stage Pipe Away Elbow 1/4" M. Inverted Flare x 1/4" F. Inverted Flare

DOMESTIC - INTEGRAL TWO STAGE
2 PSI OUTLET PRESSURE

MEC Excela-Flo™ Integral Two-Stage regulators combine the first and second stage regulator set-up into one convenient unit converting tank pressure to 2 PSI. All MEC integral two-stage 2 PSI regulators are white indicating 2 PSI outlet pressure. Integral two-stage 2 PSI regulators are recommended for installations with short piping distances, but provide the same advantages of two-stage regulation with a single unit. 2 PSI service regulators are used in conjunction with an LPG line regulator either at the indoor appliance or a remote manifold distribution header inlet. All MEC integral two-stage regulator vent have tapped ports (7/16 -24 - First Stage) (3/8" FNPT or 3/4" FNPT - Second Stage) and our exclusive E-Z Grip screens located over the outlet. Both the MEGR232E and MEGR632E series offer optimal relief performance that well exceeds UL test requirements providing over pressure protection of no more than 4 PSI downstream pressure.

MEC Excela-Flo™ Integral Two-Stage domestic regulators feature a 25 year recommended replacement life, our exclusive Tri-Tap™ (tank, 10 PSI, 2 PSI) pressure port system and tear away leak check adhesive sticker.

SPECIFICATIONS

Type: Integral Two-Stage 2 PSI
Max. Inlet Pressure: 250 PSIG
Exterior Finish: White Powder Coat
Interior Finish: White Powder Coat
Orifice Size: 0.17" (Compact) & 0.219" (Full)
Seat Material: Fluorocarbon (FKM)
Diaphragm: Fabric Reinforced NBR / Molded Lip O-Ring Bonnet/Body Seal
Relief Type: Internal Relief - Spring Loaded
Bonnet / Body Material: Die Cast Aluminum
Listings: c UL us / UL 144
Mounting Holes: Standard 3-1/2" Center
Pressure Taps: #54 Orifice 1/8" FNPT Plugged (3)
Relief Travel Stop: Molded in Adjustment Cap - Gray (Compact), White (Full Size)

Tested in the U.S.A

c UL us

PATENT PENDING

c UL us

MEGR232E Compact Series: Offers a compact integral two-stage 2 PSI regulator design perfect for lower BTU applications and confined spaces. They feature an adjustment range from 1-2.2 PSI (factory set @ 2 PSI). Stainless steel integral components, fluorocarbon (FKM) seat discs, molded lip fabric reinforced diaphragms, and large precision machined aluminum orifices providing superior downstream regulation and maximum corrosion resistance against weather or contaminated gas.

MEGR632E Full Size Series: Offers all of the same features as the compact MEGR232E series in a full size high capacity version. The full size MEGR632E diaphragm provides superior downstream regulation, has heavy duty wrench flats and a large 3/4" FNPT tapped drip lip vent to help prevent relief vent blockage.

Part No.	Type	Capacity in BTU/H LPG(1)	Inlet	Outlet	Outlet Adj. Range (PSI)	Outlet Set Point (PSI)
MEGR232E-BBH	Compact	500,000	1/4" FNPT	1/2" FNPT	1-2.2	2
MEGR232E-BBHXA(2)	Compact	500,000	1/4" FNPT	1/2" FNPT	1-2.2	2
MEGR232E-HBH	Compact	500,000	F. POL	1/2" FNPT	1-2.2	2
MEGR232E-HBHXA(2)	Compact	500,000	F. POL	1/2" FNPT	1-2.2	2
MEGR632E-BCH	Full Size	850,000	1/4" FNPT	1/2" FNPT	1-2.2	2
MEGR632E-BCHXA(2)	Full Size	850,000	1/4" FNPT	1/2" FNPT	1-2.2	2
MEGR632E-CFH	Full Size	850,000	1/4" FNPT	3/4" FNPT	1-2.2	2
MEGR632E-CFHXA(2)	Full Size	850,000	1/4" FNPT	3/4" FNPT	1-2.2	2
MEGR632E-HCH	Full Size	900,000	F. POL	1/2" FNPT	1-2.2	2
MEGR632E-HCHXA(2)	Full Size	900,000	F. POL	1/2" FNPT	1-2.2	2
MEGR632E-JFH	Full Size	850,000	F. POL	3/4" FNPT	1-2.2	2
MEGR632E-JFHXA(2)	Full Size	850,000	F. POL	3/4" FNPT	1-2.2	2

(1) Based on 30 PSIG inlet pressure and 20% droop
(2) Indicates regulator vents opposite pressure tap ports

Accessories	
Part No.	Description
MEP1632	MEC Excela-Flo™ Integral Twin Stage - First Stage Vent Guard
ME2130	First Stage Pipe Away Elbow 1/4" M. Inverted Flare x 1/4" F. Inverted Flare

INTEGRAL TWO-STAGE

2 PSI OUTLET PRESSURE

The **MEGR-300 Compact Integral Two Stage 2 PSI Regulator** is approved for use in nearly all portable applications and light duty domestic installations. Ideally suited for installations to reduce tank pressure to a nominal 2 PSI outlet pressure. 2 PSI systems typically incorporate a line service regulator within the home that further reduces the 2 PSI system pressure to approximately 11" WC prior to the appliance. These regulators feature all zinc body construction, red powder coated bonnets (identify 2 PSI model), high and low 1/8" NPT pressure tap ports, an integral second stage drip lip vent, and optional standard or 90 degree vent locations. The MEGR-300 series compact high capacity integral two stage regulator meet UL, and NFPA requirements.

SPECIFICATIONS

Type: Two Stage
Max. Inlet Pressure: 250 PSI
Inlet Connection: 1/4" FNPT
Outlet Connection: 3/8" FNPT
Exterior Finish: Red Powder Coat / Raw Zinc
Diaphragm: Fabric Reinforced Molded with O-Ring Bonnet / Body Seal
Diaphragm Type: Internal Relief - Spring Loaded
Bonnet / Body Material: Die Cast Zinc
Listings: UL LISTED / UL 144
Mounting Holes: 3-1/2" On Center
Pressure Taps: 1/8" FNPT Plugged

MEGR-300

Part No.	Description	BTU/H LPG @ 30 PSI Inlet*	Accessories
MEGR-300	Compact 2 Stage 2 PSI Regulator 1/4" FNPT Inlet x 3/8" FNPT Outlet	225,000	MEGR-900 (Z-Bracket) MEGR-861 (1st Stage Cover) MEGR-862 (2nd Stage Cover)
MEGR-300-90	Compact 2 Stage 2 PSI Regulator 1/4" FNPT Inlet x 3/8" FNPT Outlet - 90° Vent		

* Setpoint: 100 PSIG Inlet @ 2 PSI Outlet Flowing @ 30 SCFH Air

MEGR-RVB
L-Mounting Bracket

MEGR-861
First Stage Cover

MEGR-862
Second Stage Cover

DOMESTIC - AUTOMATIC CHANGEOVER

COMPACT

MEGR175CS61222-BAF

FULL SIZE

MEGR175CS61622-BCF

MEGR175CS61622E-BCH

Tested in the U.S.A

These Two Stage Automatic Changeover regulators combine the first and second stage regulator into one unit converting full tank pressure to 11" WC. MEC Excela-Flo™ Automatic Changeover regulators prevent gas outages by switching supply cylinders over to the reserve cylinder automatically when the primary cylinder is near empty. When the primary cylinder is depleted causing the changeover to occur a red indicator will appear signifying the reserve cylinder in now in use and the primary cylinder can be refilled without loss of service.

SPECIFICATIONS

Type: Automatic Changeover Two-Stage
Max. Inlet Pressure: 250 PSIG
Exterior Finish: Gold / Green Powder Coat
Orifice Size: 0.140" (Compact) & 0.219" (Full)
Seat Material: (NBR) 1st Stage, Fluorocarbon (FKM) 2nd Stage
Diaphragm: Fabric Reinforced (NBR) / Molded Lip O-Ring Bonnet/Body Seal
Relief Type: Internal Relief - Spring Loaded
Bonnet / Body Material: Die Cast Zinc/Plastic 1st Stage, Die Cast Aluminum 2nd Stage
Listings: c UL us / UL 144 2nd Stage
Mounting Holes: Standard 3-1/2" Center
Pressure Taps: #54 Orifice, 1/8" FNPT, Plugged (1)
Relief Travel Stop: Molded in Adjustment Cap - Gray (Compact), Black (Full Size)

MEGR175CS61622-BCF Series: Offers all of the same features as the compact MEGR175S61222 series but with a full size high capacity second stage regulator option. The full size second stage diaphragm provides superior downstream regulation and features heavy duty wrench flats and a large 3/4" FNPT tapped drip lip vent to help prevent relief vent blockage. This regulator is perfect for manifolding larger tanks together such as 420 LB cylinders.

MEGR175CS61222-BAF Series: Offers a compact two stage regulator option for lower BTU applications such as mobile or seasonal homes. They feature a second stage adjustment from 8-14" WC (factory set @ 11" WC), stainless steel internal components, fluorocarbon (FKM) seat discs, molded lip fabric reinforced diaphragms, and large precision machined aluminum orifices providing superior downstream regulation and maximum resistance against weather or contaminated gas. The compact second stage features a 3/8" FNPT drip lip vent.

Part No.	Type	Primary Cylinder Capacity in BTU/H LPG(1)	Auxiliary Cylinder Capacity in BTU/H LPG(1)	Inlet	Outlet	Outlet Adj. Range ("WC)	Outlet Set Point ("WC)
MEGR175CS61222-BAF	Compact	400,000	340,000	1/4" IF (2)	1/2" FNPT	9.5-13	11
MEGR175CS61622-BCF	Full Size	650,000	570,000	1/4" IF (2)	1/2" FNPT	9-13	11
MEGR175CS61622E-BCH	Full Size	625,000	525,000	1/4" IF (2)	1/2" FNPT	1.0-2.2 PSI	2 PSI

(1) Based on 30 PSIG inlet pressure and 20% droop

AUTOMATIC CHANGEOVER REGULATOR

MEGR-253
Automatic Changeover Regulator

MEGR-253H
High Capacity
Automatic Changeover Regulator

MEGR-253L
Low Capacity
Automatic Changeover Regulator

The **MEGR-253 Series** Automatic Changeover regulators automatically redirect LP gas vapor flow from an empty service cylinder to a reserve cylinder, without interruption of service. It features an easy to read green indicator which changes to red when the service cylinder needs to be refilled.

As a two-stage high-pressure regulator, the **MEGR-253H** reduces container pressure to approximately 10 to 15 PSIG and then the second stage completes the process by reducing inlet pressure down to 11 inches of water column outlet pressure.

The **MEGR-253L** is specifically intended for application with low BTU demands but still require two stage regulation. The Model MEGR-253L is ideally suited for RV, manufactured homes, cabins or other applications with a single appliance or low BTU multiple appliance applications while still permitting maximum range of output pressure adjustment.

The MEGR-253, MEGR-253H and MEGR-253L Series regulators meet UL, RVIA and NFPA requirements.

SPECIFICATIONS

Type: Two Stage
Max Inlet Pressure: 250 PSI
Inlet Connection: 1/4" Female Inverted Flare (2)
Outlet Connection: 3/8" FNPT (1)
Exterior Finish: Unfinished Zinc (MEGR-253),
Powder Coat (MEGR-253H & 253L)
Diaphragm: Fabric Reinforced Molded with O-Ring Bonnet / Body Seal
Relief Type: Internal Relief - Spring Loaded
Bonnet / Body Material: Die Cast Zinc
Listings: UL LISTED / UL 144
Mounting Holes: 3-1/2" On Center
Pressure Taps: 1/8" FNPT, Plugged (1)

MEGR-900
Z-Mounting Bracket

MEGR-RVB
L-Mounting Bracket

MEGR-862
Second Stage Cover

Part No.	Description	Primary Cylinder BTU/Hr.**	Reserve Cylinder BTU/Hr.**	Covers	Mounting Bracket
MEGR-253*	2 Stage Auto Changeover Regulator 1/4" Inv. Flare x 3/8" FPT	225,000	150,000	MEGR-862	MEGR-900 or MEGR-RVB
MEGR-253H*	*High Capacity* 2 Stage Auto Changeover Regulator 1/4" Inv. Flare x 3/8" FPT	350,000	200,000		
MEGR-253L*	*Low Capacity* 2 Stage Auto Changeover Regulator 1/4" Inv. Flare x 3/8" FPT	150,000	100,000		

* Packaged option consists of a plastic clamshell with barcode. To order add "P" at the end of the part number i.e. MEGR-253P
** BTU/H Capacity @ 20% Droop
Note: MEGR-253 and MEGR-253H set point: 100 PSIG Inlet @ 11" WC outlet flowing @ 30 SCFH Air
MEGR-253L set point: 100 PSIG Inlet @ 11" WC outlet flowing @ 10 SCFH Air

COMPACT INTEGRAL TWO STAGE

MEGR-291
Compact Regulator
with Drip Lip Vent

MEGR-295
MEGR-298 with Hard-Nose
Excess Flow POL

MEGR-291H
High Capacity Regulator
with Drip Lip Vent

MEGR-298L
Low Capacity Regulator
with Side Vent

SPECIFICATIONS

Type: Two Stage
Max. Inlet Pressure: 250 PSI
Inlet Connection: 1/4" FNPT
Outlet Connection: 3/8" FNPT
Exterior Finish: Unfinished Zinc / Powder Coated
Diaphragm: Fabric Reinforced Molded with O-Ring Bonnet / Body Seal
Diaphragm Type: Internal Relief - Spring Loaded
Bonnet/ Body Material: Die Cast Zinc
Listings: UL LISTED / UL 144
Mounting Holes: 3-1/2" On Center
Pressure Taps: 1/8" FNPT Plugged

The MEC **MEGR-291** two-stage regulators are approved for use in nearly all portable applications and outdoor cooking appliances utilizing low pressure. They feature all zinc body construction, high and low 1/8" NPT pressure tap ports, an integral second stage drip lip vent and optional standard or 90 degree vent locations.

The **MEGR-291H** is ideally suited for high demand RV, outdoor appliances, cabins, seasonal homes, gas fire places, water heaters, ranges or other moderate to low demand domestic home installations.(Green bonnet identifies high capacity model).

The **MEGR-291L** is specifically intended for application with low BTU demands but still require two stage regulation. The Model MEGR-291L is ideally suited for RV, manufactured homes, cabins or other applications with one appliance or low BTU multiple appliance applications while still permitting maximum range of output pressure adjustment.

The MEGR-291 Series regulators meet UL, RVIA and NFPA requirements.

Part No.	Description	BTU/H LPG @ 30 PSI Inlet*	Accessories
MEGR-291	Compact 2 Stage Regulator 1/4" FNPT Inlet x 3/8" FNPT Outlet	175,000	MEGR-RVB (L- Bracket) MEGR-900 (Z-Bracket) MEGR-861 (1st Stage Cover) MEGR-862 (2nd Stage Cover)
MEGR-291H	Compact 2 Stage *High Capacity* Regulator 1/4" FNPT Inlet x 3/8" FNPT Outlet	225,000	
MEGR-291L	Compact 2 Stage *Low Capacity* Regulator 1/4" FNPT Inlet x 3/8" FNPT Outlet	120,000	
MEGR-298	Compact 2 Stage Regulator 1/4" FNPT Inlet x 3/8" FNPT Outlet - 90° Vent	175,000	
MEGR-298H	Compact 2 Stage *High Capacity* Regulator 1/4" FNPT Inlet x 3/8" FNPT Outlet - 90° Vent	225,000	
MEGR-298L	Compact 2 Stage *Low Capacity* Regulator 1/4" FNPT Inlet x 3/8" FNPT Outlet - 90° Vent	120,000	
MEGR-295	Compact 2 Stage Regulator HN Excess Flow POL Inlet x 3/8" FNPT Outlet - 90° Vent	175,000	
MEGR-295H	Compact 2 Stage *High Capacity* Regulator HN Excess Flow POL Inlet x 3/8" FNPT Outlet - 90° Vent	225,000	
MEGR-295L	Compact 2 Stage *Low Capacity* Regulator HN Excess Flow POL Inlet x 3/8" FNPT Outlet - 90° Vent	120,000	
MEGR-291-20681	Compact 2 Stage Regulator Green Type I QCC Inlet x 3/8" FNPT Outlet	175,000	
MEGR-291H-20681	Compact 2 Stage *High Capacity* Regulator Green Type I QCC Inlet x 3/8" FNPT Outlet	225,000	
MEGR-298-20681	Compact 2 Stage Regulator Green Type I QCC Inlet x 3/8" FNPT Outlet - 90° Vent	175,000	
MEGR-298H-20681	Compact 2 Stage *High Capacity* Regulator Green Type I QCC Inlet x 3/8" FNPT Outlet - 90° Vent	225,000	

MEGR-291 and MEGR-291H setpoint: 100 PSIG Inlet @ 11" WC Outlet Flowing @ 30 SCFH Air
* BTU/H Capacity @ 20% Droop

MEGR-RVB
L-Mounting Bracket

MEGR-861
First Stage Cover

MEGR-862
Second Stage Cover

The MEGR-230 single-stage regulators are approved for use in small portable applications and outdoor cooking appliances ulitizing low pressure.

NOTE: Single-stage regulators are not approved for RV use per NFPA 1192.

SPECIFICATIONS

Type: Single Stage
Orifice Diameter: 0.059" Diameter
BTU Capacity: 140,000 BTU (based on 25 PSI inlet @ 20% droop)
Max. Inlet Pressure: 250 PSI
Inlet Connection: 1/4" FNPT
Outlet Connection: 3/8" FNPT
Exterior Finish: Green Wet Coat
Diaphragm Type: Molded with O-Ring Bonnet / Body Seal
Bonnet/Body Material: Die Cast Aluminum
Listings: UL LISTED / UL 144
Mounting Holes: 1" On Center

Part No.	Description	Outlet Pressure Setting	Vent Orientation
MEGR-218	Single Stage Regulator - SN FF POL w/ Plastic Handwheel x 3/8" FNPT - 90° Vent	11-inches w.c. (27 mbar)	90°
MEGR-230	Single Stage Regulator - 1/4" FNPT Inlet X 3/8" FNPT Outlet		Over Outlet
MEGR-230-9	Single Stage Regulator - SN .9 GPM Excess Flow POL Inlet x 3/8" FNPT Outlet		Over Outlet
MEGR-230-90	Single Stage Regulator - 1/4" FNPT Inlet X 3/8" FNPT Outlet - 90° Vent		90°
MEGR-230-1618	Single Stage Regulator - Black F. QCC Inlet x 3/8" FNPT Outlet - 90° Vent		90°
MEGR-230-1326	Single Stage Regulator - Black F. QCC Inlet (100,000 BTU/ H) x 3/8" FNPT Outlet		Over Outlet
MEGR-231	Single Stage Regulator - Hardnose FF POL Inlet x 3/8" FNPT Outlet - 90° Vent		90°

SINGLE STAGE
PRESSURE REDUCING

The MEGR912 Series UL Listed regulators are direct-operated, spring-loaded models designed for use in a variety of service and industrial applications. These regulators have limited-capacity internal relief across the diaphragm to help minimize over pressurization.

The MEGR912 Series with capacity ratings of less than 320,000 BTU/hr (129 scfh), are often used on small portable outdoor appliances.

Underwriters Laboratories requires horizontally mounted regulators to be installed with vent opening protection to prevent blockage by freezing rain.

SPECIFICATIONS

Type: Single Stage
Max. Inlet Pressure: 250 PSI
Vent Screen: Monel
Gasket: CGR 2750
Relief Valve: Brass and Zinc
Control and Relief Valve Spring: Plated Steel
Diaphragm Assembly: Nitrile (NBR) with Zinc disk
Spring Case: Die Cast - Zinc
Spring Seat: Plated Steel
Diaphragm Plate: Plated Steel
Body Material / Lower Casting: Die Cast - Zinc
Temperature Range: -20° to 170° F
Approximate Weight: 1.3 lbs.
Listings: UL LISTED / UL 144

MEGR912 SERIES

Part No.	Inlet x Outlet Connection Style	Orifice Sizes, Inches (mm)	Outlet Pressure Setting	Outlet Pressure Ranges, Inches W.C. (mbar)	Vent Orientation	BTU/H LPG @ 100 PSI Inlet
MEGR912/101	1/4" x 3/8" FNPT	0.073 (1,8)	11-inches w.c. (27 mbar)	9.25 to 13 (23 to 32)	Over Outlet	242,953
MEGR912/104	1/4" x 1/4" FNPT	0.073 (1,8)	11-inches w.c. (27 mbar)	9.25 to 13 (23 to 32)	Over Outlet	242,953
MEGR912/109	1/4" x 3/8" FNPT	0.073 (1,8)	7-inches w.c. (17 mbar)	5 to 10 (12 to 25)	Over Outlet	242,953
MEGR912/197	1/4" x 3/8" FNPT	0.094 (2,4)	20-inches w.c. (50 mbar)	12 to 24 (30 to 60)	Over Outlet	313,488
MEGR912H/108	1/4" x 3/8" FNPT	0.094 (2,4)	1.5 PSI (103 mbar)	0.5 to 2.7 psi (34 to 186 mbar)	Over Outlet	297,814
MEGR912H/520	1/4" x 1/4" FNPT	0.094 (2,4)	3.5 PSI (241 mbar)	2.7 to 5 psi (186 to 345 mbar)	Over Outlet	- - - -
MEGR912H/534	1/4" x 1/4" FNPT	0.073 (1,8)	1.5 PSI (103 mbar)	0.5 to 2.7 psi (34 to 186 mbar)	Over Outlet	- - - -
MEGR912N/113	1/4" x 3/8" FNPT	0.073 (1,8)	5-inches w.c. (27 mbar)	3 to 7 (7 to 17)	Over Outlet	- - - -
MEGR912N/194	1/4" x 1/4" FNPT	0.073 (1,8)	5-inches w.c. (27 mbar)	3 to 7 (7 to 17)	Over Outlet	- - - -

NOTE: Other configurations and materials available upon request

HIGH PRESSURE REGULATORS

The **MEGR-130 series** fixed high pressure single stage regulators are designed to provide an economical solution for pounds to pounds service applications. The MEGR-130 can be used to regulate air as well as LP gas. Regulators must be installed in compliance with federal, state or local codes or laws in accordance with NFPA 58.

MEGR-130-30
Pre-Set at 30 PSIG

Non-Adjustable Configurations	
Part No.	**Description**
MEGR-130-05	Compact High Pressure Fixed Reg 5 PSI - 1/4" FNPT Inlet/Outlet
MEGR-130-10	Compact High Pressure Fixed Reg 10 PSI - 1/4" FNPT Inlet/Outlet
MEGR-130-20	Compact High Pressure Fixed Reg 20 PSI - 1/4" FNPT Inlet/Outlet
MEGR-130-30	Compact High Pressure Fixed Reg 30 PSI - 1/4" FNPT Inlet/Outlet
MEGR-130-50	Compact High Pressure Fixed Reg 50 PSI - 1/4" FNPT Inlet/Outlet
MEGR-130-80	Compact High Pressure Fixed Reg 80 PSI - 1/4" FNPT Inlet/Outlet

SPECIFICATIONS

Type: Adjustable or Fixed / PSI
Max. Inlet Pressure: 250 PSIG (17.2 bar)
Inlet Connection: 1/4" FNPT
Outlet Connection: 1/4" FNPT
Orifice Diameter: 0.0625"
Exterior Finish: Red Anodized
Diaphragm: Fabric reinforced Buna N
Bonnet / Body Material: Die Cast Zinc
BTU / H Capacity: 1,200,000 BTU/H @ 40 PSIG
Listings: UL Listed / UL 144

Made in the U.S.A.

MEGR-350 -Single stage, adjustable high pressure regulator. The body and bonnet of both the fixed and adjustable regulators are precisely machined and feature a crimped design and fabric reinforced rubber diaphragm creating a positive seal for leak-free performance.

MEGR-360 with the Type I (QCC) is designed specifically for appliances such as turkey fryers, fish fryers, camp stoves and torch applications that require pounds to pounds pressure instead of inches water column. These regulators will meet or exceed most requirements on a specific outlet setting (0-10 PSI) depending on the application.

MEGR-350
Adjustable 0-10 PSIG

Adjustable Configurations	
Part No.	**Description**
MEGR-350	Compact High Press. Adjustable Reg 0-10 PSI - 1/4" FNPT Inlet/Outlet
MEGR-350-20	Compact High Press. Adjustable Reg 0-20 PSI - 1/4" FNPT Inlet/Outlet
MEGR-350-30	Compact High Press. Adjustable Reg 0-30 PSI - 1/4" FNPT Inlet/Outlet
MEGR-351	Compact High Pressure Adjustable Reg 0-10 PSI - Full Flow POL x 1/4" FNPT
MEGR-360	Compact High Pressure Adjustable Reg 0-10 PSI - Black F. QCC x 1/4" FNPT

NOTE: Not designed to provide 100% shutoff of flow.

HIGH PRESSURE REGULATORS

The **MEGR-6120 Series** are UL listed high-pressure regulators that meet a variety of applications for liquid or vapor service. The compact body design makes these regulators particularly useful in installations with space limitations. The basic MEGR-6120 Series regulators come equipped with a handwheel adjustment. The non-adjustable **ME6121 Series** provides a tamper-resistant spring case and one of seven fixed set points: 5, 10, 20, 30, 40, 50, or 60 PSI.

The MEGR-6120 & MEGR-6121 Series are UL listed as high pressure, non-relief regulators. Both MEGR-6120 & MEGR-6121 Series regulators contain brass materials that are **not** compatible with anhydrous ammonia service.

SPECIFICATIONS

Type: Adjustable or Fixed / PSI
Max. Inlet Pressure: 250 PSI (17, 2 bar)
Inlet Connection: 1/4" FNPT
Outlet Connection: 1/4" FNPT
Gauge Port: 1/4" FNPT
Exterior Finish: Red Wet Coat
Diaphragm: Fabric Reinforced Buna N
Body / Bonnet Material: Die Cast Aluminum
Liquid Capacity: 3-5 GPH
Listings: UL LISTED / UL 144

MEGR-6120 Series

Adjustable Configurations	
Part No.	**Description**
MEGR-6120-30	High Pressure Adjustable Reg 1-30 PSI - 1/4" FNPT Inlet/Outlet
MEGR-6120-60	High Pressure Adjustable Reg 1-60 PSI - 1/4" FNPT Inlet/Outlet
MEGR-6120-100	High Pressure Adjustable Reg 1-100 PSI - 1/4" FNPT Inlet/Outlet

CAPACITIES: BTU/H LPG (VAPOR)		
Outlet Set Point	**Inlet Pressure**	**BTU / HR**
15 PSI	50 PSI	850,000
15 PSI	100 PSI	1,700,000
15 PSI	150 PSI	2,500,000
20 PSI	50 PSI	900,000
20 PSI	100 PSI	1,800,000
40 PSI	100 PSI	1,500,000
40 PSI	150 PSI	2,000,000
50 PSI	100 PSI	1,300,000
50 PSI	150 PSI	1,800,000
50 PSI	200 PSI	2,300,000

Approximate BTU/H vapor capacities taking 10-20% droop into consideration

Note: Side Outlet Connection Style (Plugged): 1/4" MNPT, pressure gauge (MEJ500 Series) can be installed

MEGR-6121 Series

Non-Adjustable Configurations	
Part No.	**Description**
MEGR-6121-05	High Pressure Fixed Reg 5PSI - 1/4" FNPT Inlet/Outlet
MEGR-6121-10	High Pressure Fixed Reg 10PSI - 1/4" FNPT Inlet/Outlet
MEGR-6121-20	High Pressure Fixed Reg 20PSI - 1/4" FNPT Inlet/Outlet
MEGR-6121-30	High Pressure Fixed Reg 30PSI - 1/4" FNPT Inlet/Outlet
MEGR-6121-40	High Pressure Fixed Reg 40PSI - 1/4" FNPT Inlet/Outlet
MEGR-6121-50	High Pressure Fixed Reg 50PSI - 1/4" FNPT Inlet/Outlet
MEGR-6121-60	High Pressure Fixed Reg 60PSI - 1/4" FNPT Inlet/Outlet

VALVE SAFETY WARNING

Marshall Excelsior Company (MEC) would like to provide you with information regarding the hazards associated with Liquefied Petroleum Gas (LPG) and anhydrous ammonia (NH3) equipment. All MEC products must be installed and maintained in accordance with NFPA 58 "Liquefied Petroleum Gas Code", NFPA 59 "Utility LP-Gas Plant Code" for LPG, and ANSI Standard K61.1 for NH3, as well as all other applicable state, federal and local requirements. In the interest of safety, all persons employed in handling LPG and NH3 must be trained in proper handling and operating procedures.

MEC products are mechanical devices that are subject to wear, contaminants, corrosion, and aging of components made of materials such as rubber and metal. Over time these devices will eventually become inoperative. The safe service life of these products is affected by the environment and conditions of use that they are subjected to. MEC products have a long record of quality and service, so managers and service personnel must keep in mind the hazards that can arise from using aging devices that have outlived their safe service life.

!!! WARNING !!!

Contact with, or inhalation of liquid propane, anhydrous ammonia, and their vapors can cause serious injury and death! NH3 and LPG must be released outdoors in air currents that will ensure dispersion to prevent exposure to people and livestock and in accordance with local regulations. LPG must be kept far enough from open flame or other sources of ignition to prevent fire or explosion! LPG vapor is heavier than air and will not disperse or evaporate rapidly if released in still air! An abundant supply of clean water must be readily available and easily accessible as a means of providing IMMEDIATE First Aid treatment for exposure to anhydrous ammonia.

WARNING: These products contain a chemical known to the state of California to cause cancer and birth defects or reproductive harm

!!! CAUTION !!!

- Always wear suitable eye protection, gloves and protective clothing when operating or servicing LPG and NH3 equipment.
- Check seals, seats and Acme threads for wear and damage before use. Repair or replace all defective parts immediately.
- Always completely relieve system or line pressure prior to servicing equipment and plumbing.
- Use a suitable sealant on tapered pipe joints and always pressure test for leaks prior to returning to service.
- Always replace protective dust caps after use.
- To prevent the accidental opening of any valve, never carry or grasp a valve by its hand wheel or handle.
- To prevent accidental discharge, introducing contaminants and premature wear, never intentionally drag or drop a hose end valve.
- Use only the special wrenches designed for making 2-1/4" and 3-1/4" Acme valve connections.
- Regular inspection and maintenance is essential for continued safe operation.

Hose End and Filling Valves

Follow this procedure on every filling application in order to prevent hazardous conditions:

- Check hose end valve and filler valve for foreign materials and, if present, remove with extreme care. If foreign material cannot be safely removed, do not proceed with filling and replace valve.
- Make sure the Acme connector easily spins on by hand. Never use hammers or pipe wrenches to tighten Acme connections.
- If a leak is detected when filling is started, immediately stop the operation and follow procedures to correct the leaking condition.
- Before disconnecting a filler valve, close both the filler and hose end valve tightly and vent the trapped gas by (a) using the vent on the hose end valve or (b) slightly loosening coupling nut to vent the gas before disconnecting. Loosen the filler valve very slowly. If the gas does not stop venting, then there is a leak in the filler valve or hose end valve. Do not disconnect the filling connector. Make sure you are familiar with your companies' procedure for handling this hazardous situation and follow it carefully.

Back Checks and Valves with Back Checks

Back checks limit flow to one direction. They are not intended to be a primary shut-off. Always fully close shut-off valves equipped with back checks when not in use.

Excess Flows and Valves with Excess Flows

Excess flows check closed when their rated flow is exceeded. Always fully open a shut-off valve with an excess flow when in use.

Quick Acting Filling Valves

Inspect valves daily to ensure locking mechanism is working properly.

There are developing trends in state legislation and proposed national legislation making the owner of products responsible for replacing products before they outlive their safe service life. LP-Gas dealers should be aware of such legislation as it affects them.

Form #403 Rev F 10/10/17

TURBO-FLO LE™ SHUTOFF VALVES

MEC Excela-Flange™ SERIES

FOR USE WITH LPG & NH_3 TRANSFER SYSTEMS

The ME808-16 Series valves feature our new modular Excela-Flange 4-bolt inlet flange design that can be easily adapted to both NTP thread or socket weld type A companion flanges (ME840 & ME841 Series) ranging from 1-1/4" to 2" in diameter making it universal to piping sizes within this range. This innovative system allows installers the ability to eliminate unnecessary connections as well as possible leak points by integrating a convenient 4 bolt flange union at the valve inlet. THE TURBO-FLO LE™ system provides a safe, ergonomic and efficient solution for liquid or vapor transfer applications while increasing productivity and dramatically reducing fugitive product emissions. For use with bobtail, transport, railcar and bulk plant applications.

ME808-16

FEATURES

- Universal 4 bolt inlet flange for built in union joint
- Reduces product emissions 99.6% over standard valve combinations
- 100% compatible with all existing acme transfer connections
- Heavy duty spring loaded safety latch prevents accidental opening of valve
- Cam operated vapor equalization feature for smooth valve operation
- All stainless internal components
- Factory installed hydrostatic relief valve
- Specially formulated low temperature valve seals for maximum performance and life under all operating conditions
- Integrated Back Check (IBC) feature to allow trapped liquid to be forced back upstream of the valve if liquid is trapped downstream of the valve seat.
- Available with brass or steel acme connections.

Part No.	Description	Discharge at Disconnect	Material	Mating Flange Type	Weight (lbs.)
ME808-16	Low Emission Transfer Valve 4 Bolt Type B Flange x 3-1/4" M. Acme Fixed	3.2 CC	Ductile/Brass	A	12.3
ME808A-16	Low Emission Transfer Valve 4 Bolt Type B Flange x 3-1/4" M. Acme Fixed - w/ screen	3.2 CC	Ductile/Brass	A	12.3
ME808S-16	Low Emission Transfer Valve 4 Bolt Type B Flange x 3-1/4" M. Acme Fixed	3.2 CC	Ductile/Steel	A	12.3
ME808SA-16	Low Emission Transfer Valve 4 Bolt Type B Flange x 3-1/4" M. Acme Fixed - w/ screen	3.2 CC	Ductile/Steel	A	12.4
Accessories					
Part No.	Description				
ME807PIB	MEC Smart Interlock Sensor Kit for ME807 Series				

FOR USE WITH LPG & LH3 TRANSFER SYSTEMS

This revolutionary system provides a safe, ergonomic and efficient solution to transfer applications while increasing productivity and dramatically reducing fugitive product emissions. For use with bobtail, transport, railcar and bulk plant applications.

ME807-16

FEATURES

- Reduces product emissions 99.6% over standard valve combinations
- 100% compatible with all existing acme transfer connections
- Heavy duty spring loaded safety latch prevents accidental opening of valve
- Cam operated vapor equalization feature for smooth valve operation
- All stainless internal components
- Factory installed hydrostatic relief valve
- Specially formulated low temperature valve seals for maximum performance and life under all operating conditions
- Integrated Back Check (IBC) feature to allow trapped liquid to be forced back upstream of the valve if liquid is trapped downstream of the valve seat
- Available with brass or steel acme connections
- Designed for bi-directional flow of product
- Integrated pilot feature allows the ME807 to equalize and open only when connected to mating connection ensuring maximum safety.

The **ME135 discharge hose adapter** allows transport hoses to be adapted to work with the ME807 LE Shutoff Valve while providing a flexible connection in the transport trailer hose bleed down lines.

ME135

TURBO-FLO LE™ Transfer Valves			
Part No.	**Description**	**Discharge at Disconnect**	**Material**
ME807-16	Low Emission Transfer Valve 2" FNPT x 3-1/4" M. Acme Fixed	3.2 CC	Ductile/Brass
ME807S-16	Low Emission Transfer Valve 2" FNPT x 3-1/4" M. Acme Fixed	3.2 CC	Ductile/Steel
Accessories			
Part No.	**Description**		
ME134WR	3-1/4"F.Acme x 2MPT Filler Coupling w/Retainer Ring & 3/8"FNPT Port-Brass/Steel		
ME134SWR	3-1/4"F.Acme x 2MPT Filler Coupling w/Retainer Ring & 3/8"FNPT Port-Steel/Steel		
ME135	3-1/4"F.Acme x 2MPT Filler Coupling w/Ring & Discharge Hose-Brass Nut/Steel Stem		
ME806-16	Low Emission Transfer Valve 2" FNPT x 3-1/4" F. Acme Swivel		
ME806S-16	Low Emission Transfer Valve 2" FNPT x 3-1/4" F. Acme Swivel		
ME807PIB	Smart Interlock Technology Sensor Bracket Assembly for ME807 Series		

TURBO-FLO LE™ TRANSFER SYSTEM

Made in the U.S.A.

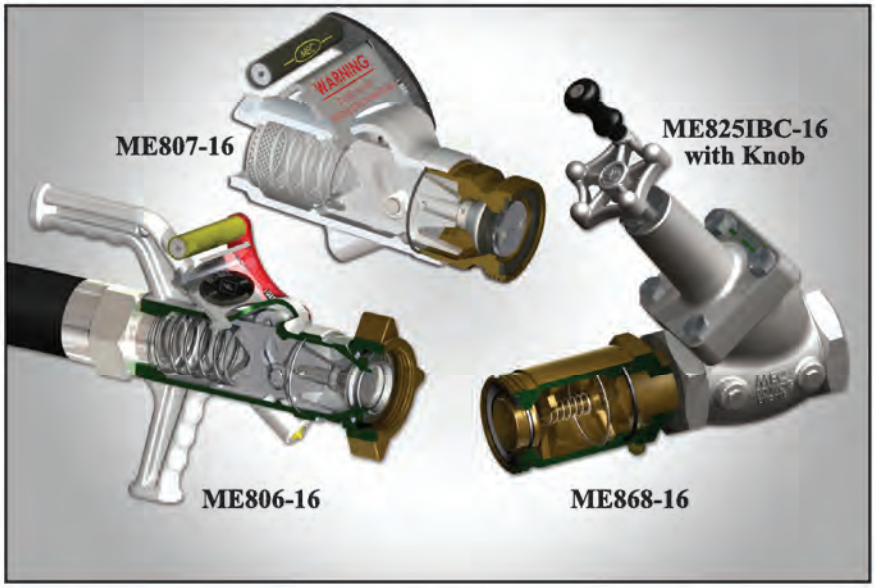

PATENT
#8,752,586
#9,310,003

Up to **55%** increased flow when entire system is installed compared to a standard globe valve system

The **TURBO-FLO LE™** (Low Emission) Transfer System is the industries **most efficient and cost-effective way** to transfer LP-Gas in bobtail, transport, railcar, and bulk plant applications. This product will pay for itself through gas savings during disconnect and its increased flow rate. While any part of this system is interchangeable with other standard systems, to receive maximum savings, all three products (LE Transfer Valve, LE Acme Adapter, and MEC Globe Valve) must be used simultaneously.

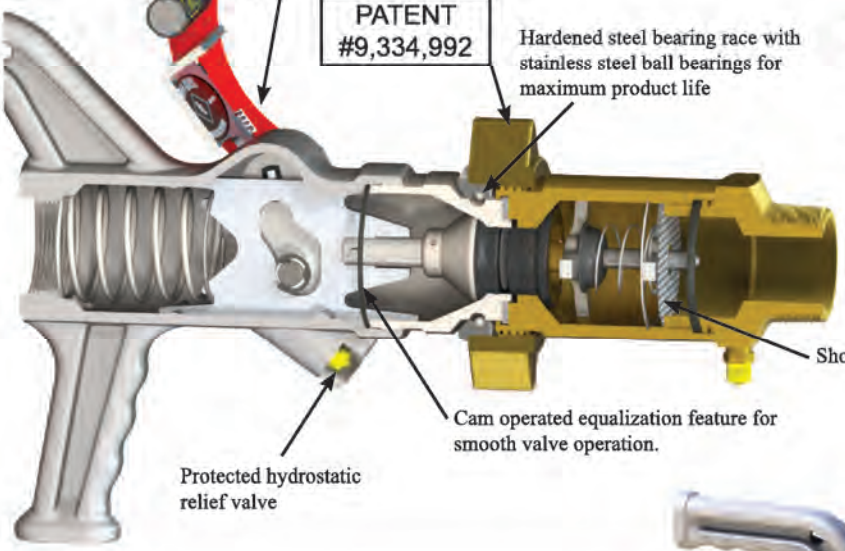

FEATURES

- Reduces product emissions by 99.6% over standard valves
- 100% compatible with existing Acme transfer connections
- All stainless steel internal components
- Convenient carrying handles and custom fit dust plug with lanyard (not shown)

Pilot orifice allows the valve to equalize and open only when the valve is attached to the mating part. When the valve is not attached to the mating part, the valve cannot equalize and will not open.

ME806-16

US PATENT
#8,113,240

TURBO-FLO LE™ Transfer Valves				
Part No.	Inlet (FNPT)	Outlet (F. Acme)	Discharge at Disconnect	Material
ME806-16	2"	3-1/4"	.09 CC	Ductile/ Brass
ME806S-16*	2"	3-1/4"	.09 CC	Ductile/ Steel

* Rated for LP-Gas & NH_3

TURBO-FLO LE™ TRANSFER SYSTEM

TURBO-FLO LE™ Acme Adapters								
Part No.	Inlet (M. Acme)	Outlet (MNPT)	Factory Installed Screen	Discharge at Disconnect	Material	Accessories		
						Mechanical Brake Interlock Retro-Fit	Electronic Proximity Interlock Kit	Back Check Test Adapter
ME866-8	1-3/4"	1"	No	.16 CC	Brass	—	—	—
ME866A-8	1-3/4"	1"	Yes	.16 CC	Brass	—	—	—
ME866-10	1-3/4"	1-1/4"	No	.16 CC	Brass	—	—	—
ME866A-10	1-3/4"	1-1/4"	Yes	.16 CC	Brass	—	—	—
ME867-10	2-1/4"	1-1/4"	No	1.96 CC	Brass	—	—	—
ME867A-10	2-1/4"	1-1/4"	Yes	1.96 CC	Brass	—	—	—
ME868-16*	3-1/4"	2"	No	3.11 CC	Brass	ME868MIB	ME868PIB	MEP105
ME868A-16*	3-1/4"	2"	Yes	3.11 CC	Brass	ME868MIB	ME868PIB	MEP105
ME868-24*	3-1/4"	3"	No	3.11 CC	Brass	ME868MIB	ME868PIB	MEP105
ME868A-24*	3-1/4"	3"	Yes	3.11 CC	Brass	ME868MIB	ME868PIB	MEP105

* Not for use in conjunction with soft seat back check

c UL us

ME868-16
U.S. Patented
Canada Patent Pending

TURBO-FLO LE™ TRANSFER SYSTEM ACCESSORIES

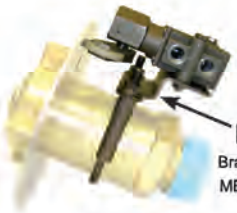

ME868MIB
Bracket and clamp only
ME868-16 & ME441F8
not included

ME868BLK

MEP105

ME868PIB
Patent Pending

ME868-16
& ME441F8 not
included

ME868BLK – "Bypass Line Kit" is used to create a one-way closed loop between the upstream and downstream sides of a Marshall Excelsior 2" globe valve when used in conjunction with a ME868 Series low emission Acme adapter. The kit features a brass one-way check valve and preformed heavy wall copper tubing with brazed end fittings for durability. This product is intended to prevent over pressurization of the ME868 Series low emission Acme adapters making them truly low emission. This product will also greatly reduce pressures within the ME868 Series adapters thereby decreasing any wear that may occur to the shutoff valves or the low emission Acme adapter.

ME868MIB – "Mechanical Interlock Bracket" allows for a standard Parker style pneumatic air roller valve normally used in conjunction with standard bobtail brake interlock systems to be retro-fit to the ME868 Series low emission Acme adapters. This bracket system allows the standard brake interlock system and connections to be moved forward to the end of the low emission adapter where normal contact with the ME441F8 flange Acme cap can occur. The kit includes all bracketing and mounting hardware. (Kit does not include Parker style pneumatic roller valve P/N CW9425)

ME868PIB – "Proximity Interlock Bracket" uses the new MEC smart interlock technology designed to connect with the Allison automatic transmission "auxiliary function range inhibit" preventing operation of the bobtail while this connection is in use. MEC smart interlock technology incorporates a high grade TURCK proximity switch that senses the presence of the stainless steel flange on the ME441F8 Acme cap when secured tightly to the ME868 Series low emission Acme adapter. This kit comes complete with all mounting hardware, MEC smart interlock technology and wiring harness to reach 5' below the deck of the bobtail.

MEP105 – This adapter allows for the periodic evacuation and testing of a bobtail's internal back check valve during five year inspection requirements. The adapter fits snuggly into the female Acme side of a ME130 which then can be threaded onto the ME868 Series low emission Acme adapter pushing the valve poppet to the open position thereby depressurizing the system for testing purposes. (Note: Be sure to consult instruction manual supplied with MEP105 test adapter before attempting use.)

HIGH FLOW GLOBE & ANGLE VALVES

Marshall Excelsior offers three types of globe and angle valves (standard, integrated pilot feature (P) or integrated back check feature (IBC)) depending on the intended application. All Marshall Excelsior globe and angle valves are designed to withstand extreme temperatures and can **increase flow up to 70 percent** over a standard globe valve. The 35 degree seat angle on the 1-1/4" and larger globe valves make them ergonomically designed for bobtail, transport and bulk plant applications. This 35 degree seat angle also allows up to 70 percent more flow. The 1-1/4" and larger globe and angle valves have an optional 360 degree rotating ME829 ***E-Z Turn*** knob

To increase the longevity of the seal, all Marshall Excelsior globe and angle valves have a 360 degree rotating seal that stops rotating when it contacts the sealing surface while the valve continues to be tightened. The 1-1/4" and larger models feature ball bearings to facilitate increased seal life.

All 1-1/4" and larger globe and angle valves come with an upstream and downstream plugged port. The boss of these ports are large enough to drill and tap a 3/4" FNPT hole for a jumper line or standard by-pass valve.

These valves are mainly used in piping systems to control liquid or vapor flow in bulk plants, bobtails, transports, pumps or compressors. Globe valves are designed to be installed in a straight section of piping and angle valves are designed to be installed when a 90 degree directional change is needed in the piping.

Change the sealing compound and Marshall Excelsior's globe and angle valves can be used in numerous industries including, but not limited to LP-Gas, anhydrous ammonia, petrochemical and chemical applications. The standard seal compound is Nitrile with Teflon® or Viton® also available. Contact us if you have a need for a different seal compound.

Marshall Excelsior valves are designed to be hand tightened. Using wrenches or excess force to open or close the valve can cause damage to the seal, decreasing the valve's life.

Installation Note: Before installing a globe or angle valve, the piping system and container must be free of dirt, debris, foreign matter and other particles, large or small, that could damage the sealing surface or seal of the valve. A minimal amount of pipe sealant should be used on the mating part. Excess pipe sealant can also cause damage to the seal surface or seal. Damage to the sealing surface or the seal will cause the valve to leak.

To avoid damage to the valve or piping, due to pressure build-up from temperature changes, a hydrostatic relief valve should be installed where liquid can be trapped between two shutoff valves.

A vent valve should be installed on the downstream side of the globe or angle valve if the angle valve is used as a shutoff valve at the end of a loading hose. This allows the operator to vent the trapped liquid before disconnect.

Teflon® is a trademark of DuPont Company and Viton® is a trademark of DuPont Performance Elastomers

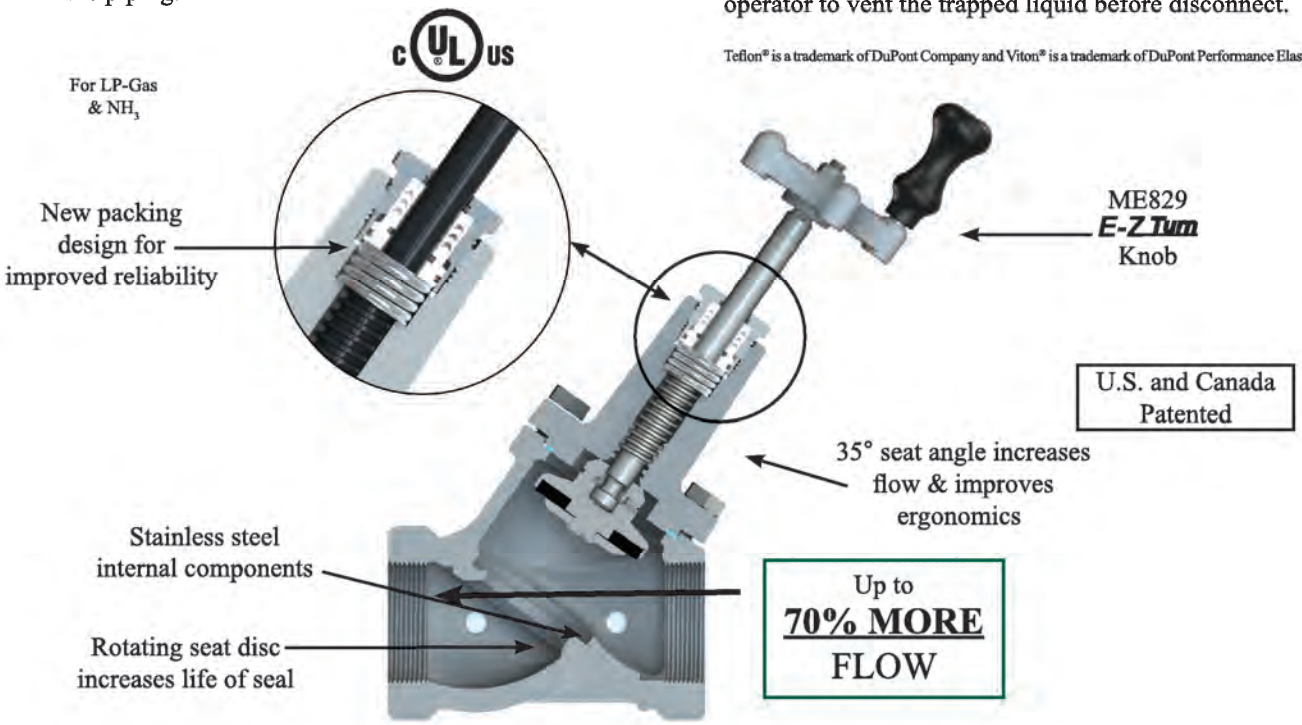

HIGH FLOW GLOBE & ANGLE VALVES

MEC Excela-Flange™ SERIES

The ME813, ME818, ME819 and ME823 Series valves feature our new modular Excela-Flange™ 4 Bolt inlet/outlet design that can be easily adapted to both NTP thread or socket weld type A companion flanges (ME840 & ME841 Series) ranging from 1-1/4" to 2" in diameter making it universal to piping sizes within this range. This innovative system allows installers the ability to eliminate unnecessary connections as well as possible leak points by integrating a convenient 4 bolt flange union at the valve inlet/outlet connections.

NEW!
ME823SS-10
2" Double Flange
Stainless Steel
Globe Valve

ME813-16
2" Double Flange
Angle Valve

ME823-16
2" Double Flange
Globe Valve

ME819-16
2" Flange x NPT
Globe Valve

FEATURES

- All stainless steel internal components with rotating seat disc design & V-cup Teflon® packing stem seals
- Double lead acme stem thread ensures quick and efficient operation
- Durable ductile iron valve body with zinc plating finish
- 1-1/4" & larger globe valves have 35° seat angle for maximum product flow
- 1-1/4" & larger globe valve designed ergonomically correct for bobtail transport and bulk plant applications
- Rated for 400 WOG
- Operating temperature –40° to +212° Fahrenheit
- Up to **70% MORE FLOW** than the nearest competitor
- 1/4" FNPT or 1/2" FNPT plugged accessory ports upstream and downstream of valve seat
- Standard Nitrile seat, optional Teflon or Viton seat
- **Some models available with CF8M Stainless Steel body & bonnet**

Angle	Globe	Description	Side Ports	Inlet	Outlet	Mating Flange Type	Weight (lbs.) Angle	Weight (lbs.) Globe
ME813-10	ME823-10	1-1/4" - 4 Bolt Full Flow Double Flange Valve	1/4" FNPT	4 Bolt Flange Type B	4 Bolt Flange Type B	A	14.8	15.3
—	ME823SS-10 (1)					A	—	15.0
—	ME822-16	2" - 4 Bolt Full Flow Double Flange Valve	1/2" FNPT			A	—	19.7
ME813-16	ME823-16		1/4" FNPT			A	17.6	19.6
ME813SS-16 (1)	ME823SS-16-4 (1) (2)					A	16.0	17.0
—	ME818-16		1/2" FNPT		2" FNPT	A	—	17.7
—	ME819-10	1-1/4" - 4 Bolt Full Flow Single Flange Valve	1/4" FNPT		1-1/4" FNPT	A	—	14.0
—	ME819SS-10 (1)					A	—	13.5
—	ME819-16 ME819-16-4	2" - 4 Bolt Full Flow Single Flange Valve	1/4" FNPT		1-1/4" FNPT	A	—	17.7
—	ME819SS-16-4 (1) (2)				2" FNPT	A	—	15.5

(1) "SS" indicates CF8M Stainless Steel body & bonnet
(2) ME823SS-16-4 and ME819SS-16-4 include a bottom port

Viton® ® are trademarks of DuPont Performance Elastomers.

HIGH FLOW GLOBE & ANGLE VALVES

c UL us
For LP-Gas & NH_3

FEATURES

- All stainless steel internal components with rotating seat disc design & V-cup Teflon® packing stem seals
- Double stem seal design ensures leak free operation
- Double lead stem thread ensures quick and efficient operation
- Durable ductile iron valve body with automotive grade powder coat finish
- 1-1/4" & larger globe valves have 35° seat angle for maximum product flow
- 1-1/4" & larger globe valve designed ergonomically correct for bobtail transport and bulk plant applications
- 1-3/4", 2-1/4" & 3-1/4" Acme threads available on globe valves
- Rated for 400 WOG
- Operating temperature –40° to +212° Fahrenheit

ME825-6
Vent Valve Not Included

Part No.		Inlet (FNPT)	Outlet	Side Port T)	No. of Side Ports	Flange Style Bonnet	Accessories			
Angle	Globe						E-Z Turn Knob	Push-To-Turn Locking Handwheel Kit	Hydrostatic Relief Valves	Vent Valves
ME815-4	**ME825-4**	1/2"	1/2" FNPT	1/4"	2	No	—	—	MEH225 MEH225SS MEH25/450	MEJ400 MEJ400SC MEJ402S
ME815-6	**ME825-6**	3/4"	3/4" FNPT	1/4"	2	No	—	—		
ME815-8	**ME825-8**	1"	1" FNPT	1/4"	2	No	—	—		
ME815-10	**ME825-10**	1-1/4"	1-1/4" FNPT	1/4"	2	Yes	ME829	ME815-16LHK		
——	**ME826-10**	1-1/4"	1-3/4" M. Acme	1/4"	2	Yes	ME829	ME815-16LHK		
——	**ME827-10**	1-1/4"	2-1/4" M. Acme	1/4"	2	Yes	ME829	ME815-16LHK		
ME815-12	**ME825-12**	1-1/2"	1-1/2" FNPT	1/4"	2	Yes	ME829	ME815-16LHK		
ME815-16	**ME825-16**	2"	2" FNPT	1/4"	2	Yes	ME829	ME815-16LHK		
——	**ME824-16**	2"	2" FNPT	1/2"	2	Yes	ME829	ME815-16LHK	MEH50/460	—
ME815-2F	**ME825-2F**	2"-300LB Flanged	2"-300LB Flanged	1/4"	2	Yes	ME829	ME815-16LHK	MEH225 MEH225SS MEH25/450	MEJ400 MEJ400SC MEJ402S
ME815-24	**ME825-24**	3"	3" FNPT	1/4"	2	Yes	included	—		
ME815-3F		3"-300LB Flanged	3"-300LB Flanged	1/4"	2	Yes	included	—		

To order Teflon® or Viton® Seal add "T" for Teflon® and "V" for Viton® after the prefix part number
i.e. ME815T-10 or ME815V-10

® is a trademark of DuPont Company and Viton® is a trademark of DuPont Performance Elastomers.

MEC Next Generation Excela-Flange™ SERIES

The *Next Generation* Flanged 2" Globe and Angle Valves feature our new modular Excela-Flange 4 Bolt inlet/outlet design that can be easily adapted to both NTP thread or socket weld type A companion flanges (ME840 & ME841 Series) ranging from 1-1/4" to 2" in diameter making it universal to piping sizes within this range. This innovative system allows installers the ability to eliminate unnecessary connections as well as possible leak points by integrating a convenient 4 bolt flange union at the valve inlet/outlet connections.

- ALL OF THE SAME GREAT FEATURES OF THE ORIGINAL FULL FLOW MEC GLOBE VALVES WITH ADDITIONAL PRODUCT PERFORMANCE ENHANCEMENTS.

Pilot Feature: (P) This globe valve model incorporates a pilot orifice feature to facilitate pressure equalization in sections of system piping that have bidirectional flow or high differential pressures. This greatly reduces the opening torque required and prevents premature wear of the valve seat.

Integrated Back Check Feature: (IBC) These globe and angle valve models incorporate an integrated back check feature to allow trapped downstream pressure to automatically bypass to the upstream side of the valve. These valves are designed for systems with flow in one direction, creating a closed loop system that prevents the product from relieving to the atmosphere making for a low emission, more environmentally friendly option.

ME819P-16
2" - Flange x NPT
Globe Valve

PATENT #8,596,301

NEW!
ME813SSIBC-16
2" Double Flange
IBC Stainless Steel
Angle Valve

Pilot Feature

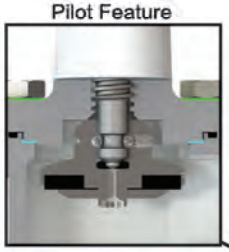

Integrated Back Check Feature

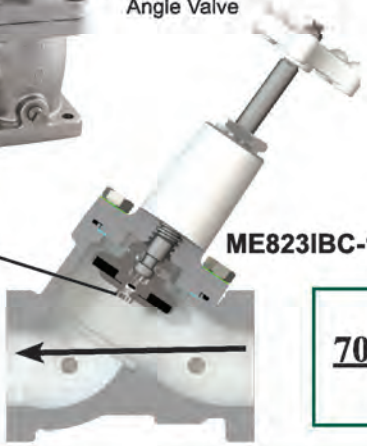

ME823IBC-16

Up to
70% MORE
FLOW

ME823P-16

Angle	Globe	Description	Side Ports	Inlet	Outlet	Mating Flange Type	Weight (lbs.) Angle	Weight (lbs.) Globe
ME813IBC-16	ME823IBC-16	2" Full Flow 4 Bolt Double Flange (IBC) Valve	1/4" FNPT	4 Bolt Flange Type B	4 Bolt Flange Type B	A	17.6	20.1
ME813SSIBC-16 (1)	ME823SSIBC-16-4 (1) (2)					A	15.5	17.0
—	ME822IBC-16		1/2" FNPT			A	—	19.7
ME813P-16	ME823P-16	2" Full Flow 4 Bolt Double Flange (P) Valve	1/4" FNPT			A	18.1	20.1
—	ME822P-16		1/2" FNPT			A	—	20.1
—	ME818IBC-16	2" Full Flow 4 Bolt Single Flange (IBC) Valve	1/2" FNPT		2" FNPT	A	—	18.2
—	ME818P-16	2" Full Flow 4 Bolt Single Flange (P) Valve	1/2" FNPT			A	—	18.2
—	ME819IBC-16	2" Full Flow 4 Bolt Single Flange (IBC) Valve	1/4" FNPT			A	—	18.1
—	ME819SSIBC-16 (1)					A	—	15.5
—	ME8191BC-16-4					A	—	18.1
—	ME819SSIBC-16-4 (1)					A	—	15.5
—	ME819P-16	2" Full Flow 4 Bolt Single Flange (P) Valve	1/4" FNPT			A	—	18.1

(1) "SS" indicates CF8M Stainless Steel body & bonnet
(2) ME823SSIBC-16-4 includes a 1/2" FNPT bottom port

HIGH FLOW GLOBE & ANGLE VALVES

MEC *Next Generation*

These *Next Generation* High Flow globe and angle valves have the same great features of the ORIGINAL High Flow Marshall Excelsior globe and angle valves with additional product performance enhancements. These globe and angle valves provide a positive shutoff that is highly reliable with High Flow performance with bidirectional flow or reduced product emissions.

Integrated Back Check Feature (IBC) - Designed for use in sections of piping where the trapped liquid pressure may exceed 100 psig between two valves. When trapped liquid pressure exceeds 100 psig, the integrated back check feature automatically bypasses trapped downstream system pressure through the valve seat to the upstream side of the valve into the product container or piping. A closed looped system is created because the 100 psig is far below the 400—500 psig set pressure of a hydrostatic relief valve keeping the product in the system and reducing product emissions.

WARNING: NFPA 58 requires that a hydrostatic relief valve be installed into any section of piping that could allow liquid to become trapped between two shutoff valves.

Integrated Pilot Feature (P) - Designed for sections of piping that have bidirectional flow. Standard globe and angle valves installed in bidirectional systems can have a potential for back pressure to build-up on the upstream side of a closed valve. This pressure adds to the force required to open the valve causing additional wear to the valve stem and seat material. The integrated pilot feature allows the first portion of stem travel to unseat the pilot orifice, automatically equalizing the system pressure prior to unseating the valve holder seal. This greatly reduces the opening torque required in bidirectional systems and prevents premature wear of the primary valve seat material and valve components.

Integrated Back Check Feature (IBC)

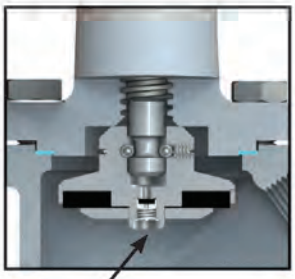

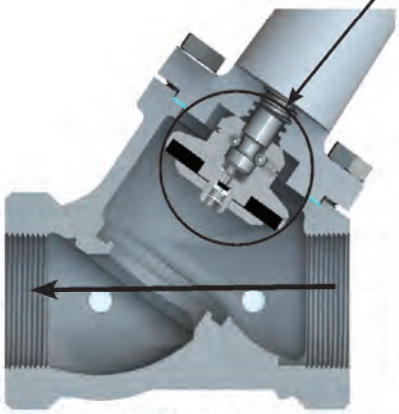

Made in the U.S.A.

c UL us
For LP-Gas & NH_3

Up to
70% MORE
FLOW

Integrated Pilot Feature (P)

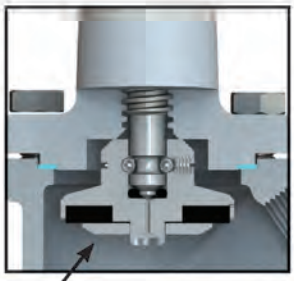

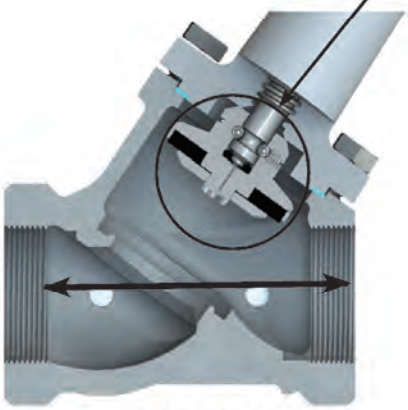

ME825IBC-16
U.S. and Canada Patented

ME825P-16
U.S. and Canada Patented

Part No.				Inlet (FNPT)	Outlet	Side Port (FNPT)	No. of Side Ports	Flange Style Bonnet	Accessories		
Angle		Globe									
Integrated Back Check	Pilot Feature	Integrated Back Check	Pilot Feature						E-Z Turn Knob	Hydrostatic Relief Valves	Vent Valves
ME815IBC-16	ME815P-16	ME825IBC-16	ME825P-16	2"	2" FNPT	1/4"	2	Yes	ME829	MEH225 MEH225S MEH25/450	MEJ400 MEJ400SC MEJ402S
—	—	ME824IBC-16	ME824P-16	2"	2" FNPT	1/2"	2	Yes	ME829	MEH50/460	—

Excela-Flange™ 2" INTEGRATED PILOT VALVES W/ BOTTOM PORT

Provides a positive shut-off valve that is highly reliable with full flow performance while providing bi-directional flow. Ideally suited for use on transport trailers with 1/2" blow down lines to provide rapid and complete product evacuation prior to disconnecting transfer hose. Valves can be purchased with hydrostatic relief valves pre-installed on the out board side port of the globe valve main seal.

- All of the same great features of the original full flow MEC globe valves with additional product performance enhancements.

Pilot Feature: (P) This globe valve model incorporates a pilot orifice feature to facilitate pressure equalization in sections of system piping that have bidirectional flow or high differential pressures. This greatly reduces the opening torque required and prevents premature wear of the valve seat.

The Excela-Flange™ 2" bottom port operated flanged globe valves feature our new modular Excela-Flange 4 bolt inlet/outlet flange design that can be easily adapted to both NPT thread or socket weld Type A companion flanges (ME840 & ME841 Series) ranging from 1-1/4" to 2" in diameter making it universal to piping sizes within this range. This innovative system allows installers the ability to eliminate unnecessary connections as well as possible leak points by integrating a convenient 4 bolt flange union at the valve inlet/outlet connections.

NEW!
ME819SSP-16-4
2" - Flange x NPT Pilot Stainless Steel Globe Valve

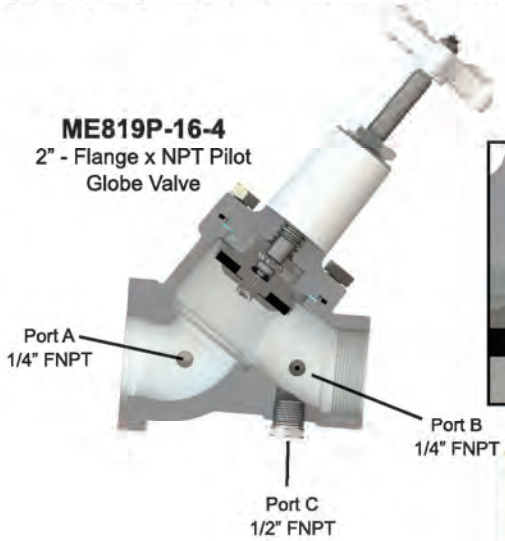

ME819P-16-4
2" - Flange x NPT Pilot Globe Valve

Pilot Feature

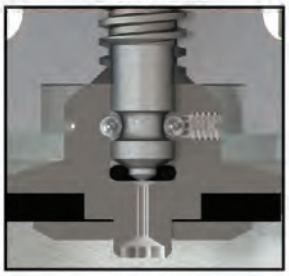

Up to
70% MORE
FLOW

ME823P-16-4
2" - Double Flange Pilot Globe Valve

Part No	Description	1/4" FNPT Side Port A	1/4" FNPT Side Port B	1/2" FNPT Bottom Port C	Inlet	Outlet	Mating Flange Type	Weight (lbs)
ME822P-16-4 (1)	2" Full Flow 4 Bolt Flange (P) Valve	Plugged	Plugged	Plugged	4 Bolt Flange Type B	4 Bolt Flange Type B	A	20.2
ME822SSP-16-4 (1) (2)		Plugged	Plugged	Plugged			A	17.0
ME823P-16-4		Plugged	Plugged	Plugged			A	20.1
ME823SSP-16-4 (2)		Plugged	Plugged	Plugged			A	17.0
ME823P-16H-4		Plugged	MEH225	Plugged			A	20.1
ME823P-16HSS-4		Plugged	MEH225SS	Plugged			A	20.1
ME823SSP-16HSS-4 (2)		Plugged	MEH225SS	Plugged			A	17.0
ME818P-16-4(1)		Plugged	Plugged	Plugged		2" FNPT	A	18.2
ME819P-16-4		Plugged	Plugged	Plugged		2" FNPT	A	18.2
ME819SSP-16-4 (2)		Plugged	Plugged	Plugged		2" FNPT	A	15.5
ME819P-16H-4		Plugged	MEH225	Plugged		2" FNPT	A	18.2
ME819P-16HSS-4		Plugged	MEH225SS	Plugged		2" FNPT	A	18.2
ME819SSP-16HSS-4 (2)		Plugged	MEH225SS	Plugged		2" FNPT	A	15.5

(1) Indicates all ports 1/2" FNPT
(2) "SS" indicates CF8M Stainless Steel body & bonnet

HIGH FLOW GLOBE AND ANGLE VALVES

2" *Next Generation* - 1/2" BOTTOM PORT

Provides a positive shut-off valve that is highly reliable with high flow performance while providing bi-directional flow. Ideally suited for use on transport trailers with 1/2" blow down lines to provide rapid and complete product evacuation prior to disconnecting the transfer hose. Valves can be purchased with hydrostatic relief valves pre-installed in the side port of the globe valve downstream of the main seal.

- All of the same great features of the original full flow MEC globe valves with additional product performance enhancements.
- **Pilot Feature: (P)** These globe valve models incorporate a pilot orifice feature to facilitate pressure equalization in sections of system piping that have bidirectional flow or high differential pressures. This greatly reduces the opening torque required and prevents premature wear of the valve seat.

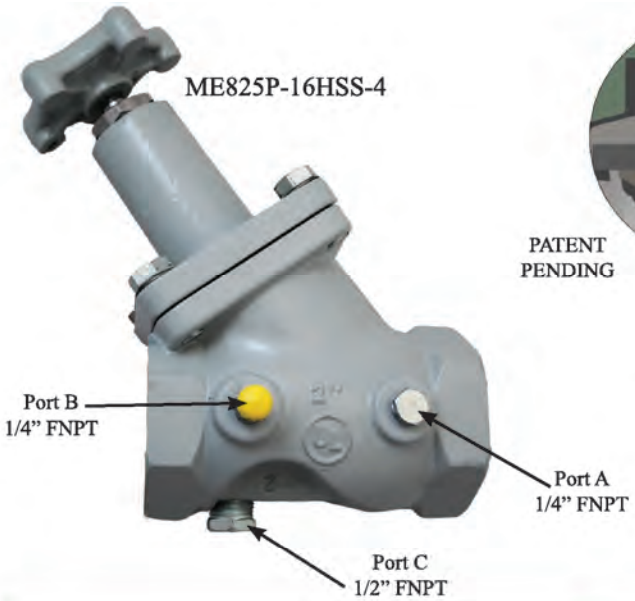

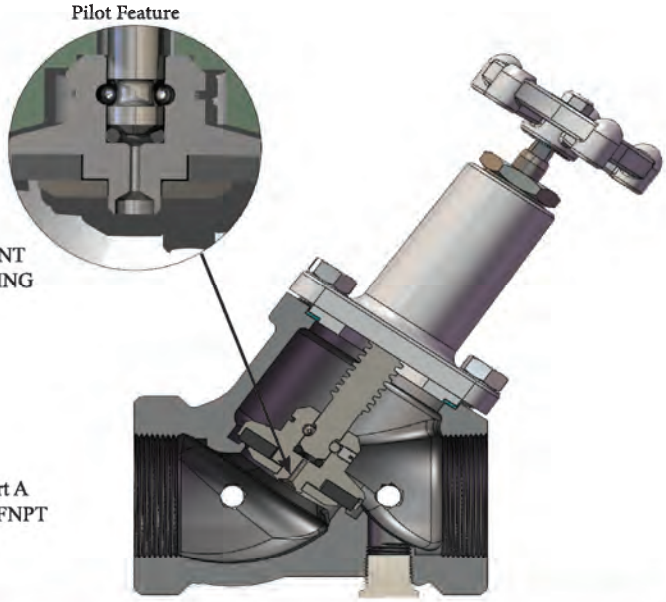

Next Generation Globe and Angle Valves						
Part No.	Description	1/4" FNPT Side Port A	1/4" FNPT Side Port B	1/2" FNPT Bottom Port	Inlet/ Outlet	Accessories: E-Z Turn Knob
ME825P-16-4	Full Flow Valve with Integrated Pilot Feature	Plugged	Plugged	Plugged	2" FNPT	ME829
ME825P-16H-4	Full Flow Valve with Integrated Pilot Feature	Plugged	MEH225	Plugged	2" FNPT	ME829
ME825P-16HSS-4	Full Flow Valve with Integrated Pilot Feature	Plugged	MEH225SS	Plugged	2" FNPT	ME829

PUSH-TO-TURN LOCKING HANDWHEEL KIT

Helps prevent accidental opening of any 1-1/4", 1-1/2", or 2" MEC angle or globe valve configuration. Once installed the kit requires the operator to push down on the hand wheel to engage the valve stem in order to open or fully close the valve making it a deliberate action to actuate. The ejection spring disengages the handwheel from the stem when released, preventing unintentional opening of the valve.

Part No.	Description
ME815-16LHK	Push-To-Turn Locking Handwheel Kit for all 1-1/4", 1-1/2" & 2" MEC Angle / Globe Valves

Note: MEC strongly recommends use of ME829 EZ-Turn Handwheel knob to promote ease of use for this product (NOT INCLUDED IN ME815-16LHK KIT).

FLANGED FULL PORT GLOBE VALVES

The Full Port Flanged Globe Valves provide all the servicability features of a traditional globe valve with the full port flow capacity of a ball valve. Flanged end connections facilitate easy servicing along with a replaceable valve seat providing long service life for your investment. The valve also features an integrated pilot feature allowing pressure equalizing across the valve seat for bi-directional system flow.

PATENT
#9,453,588

ME825-3F

FEATURES

- Has same great reliable and durable teflon stem packing glands as our other globe valves
- Features exclusive slip cam construction for full port flow rates
- All stainless steel internal component construction for maximum corrosion resistance
- Removable bonded main seat disc assembly
- Same overall length as ANSI ball valve
- **Pilot Feature: (P)** These globe valve models incorporate a pilot orifice feature to facilitate pressure equalization in sections of system piping that have bidirectional flow or high differential pressures. This greatly reduces the opening torque required and prevents premature wear of the valve seat.

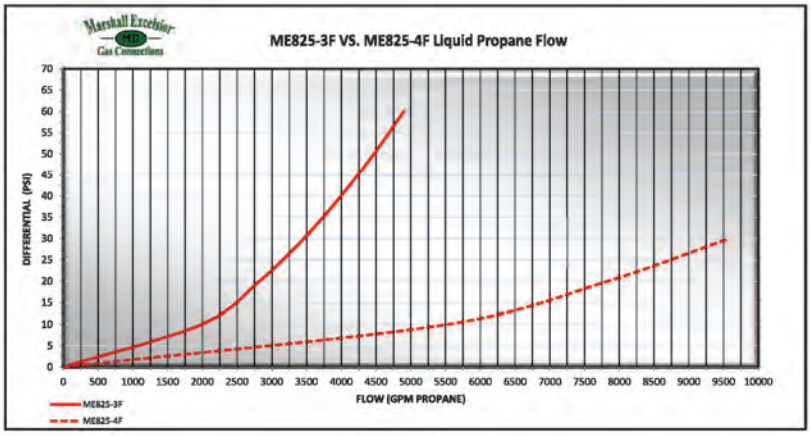

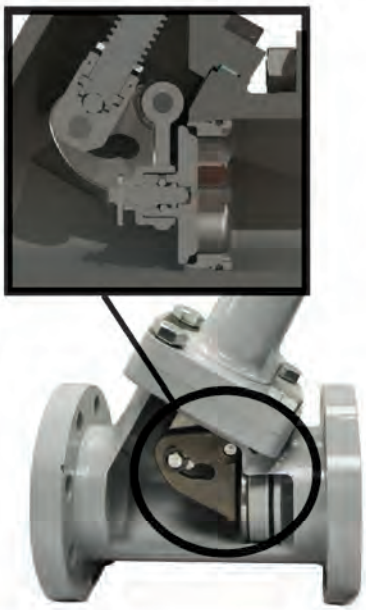

Part No.	Description	Side Port	No. of Side Ports	Inlet	Outlet
ME825-3F	Full Port Globe Valve with Integrated Pilot Feature	1/4" FNPT	2	3"-300 LB	3"-300 LB
ME825-4F	Full Port Globe Valve with Integrated Pilot Feature	1/4" FNPT	2	4"-300 LB	4"-300 LB

Accessories	
Part No.	Description
ME829	Black Handwheel E-Z Turn Knob Kit
ME980SK-24	3" & 4"-300LB ESV & Globe Valve Flange Stud Kit
ME904S-3F-027	3"-300 LB Spiral Ring Flange Gasket-Carbon Steel
ME904S-4F-027	4"-300 LB Spiral Ring Flange Gasket-Carbon Steel

HIGH FLOW SOCKET WELD BODIES

MEC Excela-Flange™ SERIES

These tees and elbows are available in both 2" and 3" socket weld or butt weld pipe configuration and maximize flow through system piping where a 90° turn must be made. Flow rates are maximized by an optimized flow path as well as nearly seamless piping joints reducing turbulence and focusing flow through the system. Ideally suited for pump discharge lines, transport loading/unloading tee assemblies, spray fill lines or any other piping application where piping is welded and high flow rates are desired.

Made in the U.S.A.

MEP995S-24/16
3" F. Socket Weld X
(2") -2" F. Socket Weld Tee

MEP996S-16
2" F. Socket Weld X
2" F. Socket Weld Tee

FEATURES

- All steel construction for maximum durability and weldability
- Available in 2" & 3" Socket Weld configurations
- 2" butt weld connection for shorter overall profiles and increase flexibility
- MEP999 Series features an integrated type A 4 bolt flange union
- Coated for maximum corrosion resistance
- Approved for use in LPG or NH_3 service
- Rated 400 WOG
- Available in Stainless Steel construction

MEP995SBW-16
3" F. Butt Weld X
(2") -2" F. Butt Weld Tee

MEC Excela-Flange High Flow Socket Weld Tees		
Part No.	**Description**	**Weight (lbs.)**
MEP995S-16	2"x 2"x 2" Socket Weld High Flow Tee Body-Steel	6.1
MEP995S-24/16	3"x 2"x 2" Socket Weld High Flow Tee Body-Steel	7.8
MEP995SBW-16	2"x 2"x 2" Butt Weld High Flow Tee Body-Steel	4.2
MEP999S-16	4 Bolt Type A x 2"x 2" Socket Weld High Flow Tee Body-Steel	7.0
MEP999SBW-16	4 Bolt Type A x 2"x 2" Butt Weld High Flow Tee Body-Steel	5.72
MEC Excela-Flange High Flow Socket Weld Elbows		
Part No.	**Description**	**Weight (lbs.)**
MEP996S-16	2" x 2" Socket Weld High Flow Elbow Body-Steel	3.8
MEP996SBW-16	2" x 2" Butt Weld High Flow Elbow Body-Steel	2.5
MEP996S-24	3" x 3" Socket Weld High Flow Elbow Body-Steel	6.7

*To order Stainless Steel add "SS" after the prefix part number - i.e. MEP995SS-16

MEP999SBW-16
2" x 2" Butt Weld Elbow

HIGH FLOW 4" PUMP AUXILIARY SUCTION INTAKE FLANGE ADAPTERS

MEC Excela-Flange™ SERIES

Specifically designed to bolt directly to 3"- 4 bolt flange auxiliary suction intake openings on standard 4" flange mount mobile transport trailer pumps to eliminate unwanted threaded joints. The MEP998 is equipped with a 4 bolt type A flange inlet for mounting to either ME842 or ME843 series Excela-Flange™ companion flanges where additional piping is desired or direct bolt onto ME819P Series Excela-Flange™ globe valves for a worry-free easy to maintain auxiliary intake assembly.

Part No.	Description	Weight (lbs.)
MEP998	Excela-Flange™ 3" - 4 Bolt (Type A) x 2" - 4 Bolt (Type A) Auxiliary Suction Intake	6.25

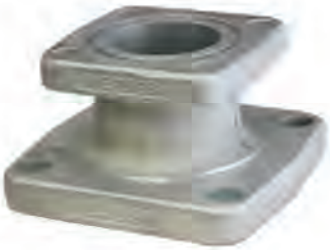

FEATURES

- Zinc plated ductile iron body
- Approved for use in LPG or NH_3 service
- Rated 400 WOG
- For use with all Type B (ME842 & ME843 Series) companion flanges

3" x 2" x 2" x 4-BOLT FLANGE
HIGH FLOW CROSS-OVER SELF LOADING INTAKE ADAPTER

MEC Excela-Flange™ SERIES

Specifically designed to allow for high flow liquid transfer in auxiliary self load cross-over line applications on mobile transport trailers. The MEP997S-24/16 is equipped with a 3" socket weld connection, to allow direct connection to ME994S-3F Series Excela-Flange Internal Valves and (2) 2" socket weld discharge ports as well as an auxiliary 4 bolt (type B) intake flange. The 4 bolt (type B) intake flange allows for maximum product flow, while providing a convenient flange union for system maintenance.

MEP997-24/16

3" Socket Weld X (2) 2" Socket Weld X 2"-4 Bolt (Type B) Flange Adapter

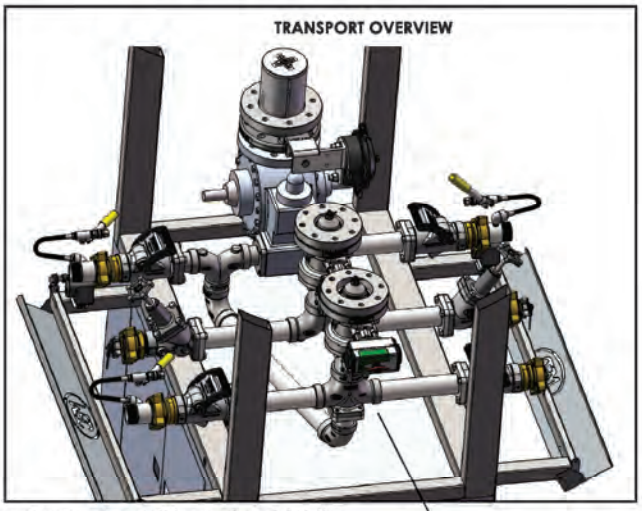

MEP997-24/16

FEATURES

- All steel or stainless steel construction for maximum durability and weldability
- Approved for use in LPG or NH_3 service
- Rated 400 WOG
- For use with all Type A (ME840 & ME841 Series) companion flanges

MEC Excela-Flange High Flow Cross-over Self Load Intake Adapter		
Part No.	**Description**	**Weight (lbs.)**
MEP997S-24/16	Excela-Flange™ 3" Socket Weld x (2) 2" Socket Weld x 4 Bolt (Type B) Flange Intake Adapter - Steel	10.0

*Available in Stainless Steel construction. To order Stainless Steel add "SS" after the prefix part number - i.e. MEP997S-24/16

WELDABLE NPT SWIVEL CONNECTOR JOINTS

The ME691 and ME693 series weldable NPT swivel joints are intended for use anywhere that welded piping is desired but NPT threaded flex lines must be installed to protect against vibration and/or fixed piping metal fatigue. The weld end features a unique butt weld/socket weld end that is universal for either connection type. The NPT end features a crimped female swivel with a tapered internal seat ideal for sealing on all standard male NPT flex line connectors. These connectors are ideal for both mobile and stationary applications such as pump inlet/outlet, meter inlet, or hose reel inlet piping transitions.

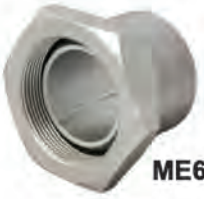

ME691-16

ME691-12

FEATURES

- Compact high grade plated steel construction
- Universal butt weld/socket weld end connection
- Universal tapered FNPT seat design
- Ready to weld without surface preparation
- Rated 400 WOG for LPG & NH_3 applications

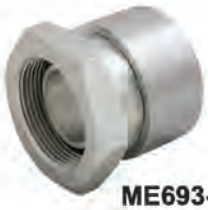

ME693-16/12

Part No.	Description	Butt/Socket Weld	FNPT Swivel
ME691-12	Swivel Connector Joint	1-1/2"	1-1/2"
ME693-16/12		2"	1-1/2"
ME691-16		2"	2"

NOTE: Available in stainless steel construction. To order stainless steel add "SS" after the prefix part number - i.e. ME691SS-12

4 BOLT UNIONS & COMPANION FLANGES

These 4 bolt unions can be used anywhere system piping needs to be joined together between shut off valves. Using piping unions such as these significantly improves the ease by which maintenance can be performed particularly where long runs or multiple directional changes are necessary. Our flange unions feature a captured o-ring design, hardened mounting bolts, and are available in NTP or Socket Weld configurations. Suitable for use in mobile or stationary applications.

ME841-16F
(Requires purchase of flat face flange)
TYPE A FLANGE

ME843-16-107
(Requires purchase of mating kit)
TYPE B FLANGE

FEATURES

- All steel or stainless steel construction for maximum durability and weldability
- Available in 1-1/4" - 2" FNPT or Socket Weld configurations
- Zinc plated flange faces for maximum corrosion resistance
- No plating on weld surfaces for improved weld quality with minimum weld prep
- Approved for use in LPG or NH_3 service
- Rated 400 WOG

MEP840/MEP841

NOTE: See page 91 for flange configuration dimensions

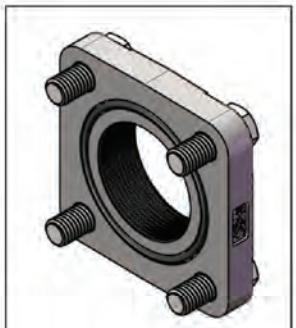

TYPE "A"

O-RING SEAL

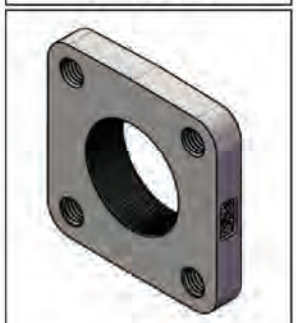

TYPE "B"

FLAT FACE

MEC Flat Face Flanges			
Part No.	**Description**	**Flange Type**	**Weight (lbs.)**
ME842-10-107	1-1/4" FNPT Tapped 4 Bolt Flat Face Flange Adapter	B	2.7
ME843-10-107	1-1/4" Socket Weld 4 Bolt Flat Face Flange Adapter	B	2.6
ME842-12-107	1-1/2" FNPT Tapped 4 Bolt Flat Face Flange Adapter	B	2.6
ME843-12-107	1-1/2" Socket Weld 4 Bolt Flat Face Flange Adapter	B	2.5
ME842-16-107	2" FNPT Tapped 4 Bolt Flat Face Flange Adapter	B	2.2
ME843-16-107	2" Socket Weld 4 Bolt Flat Face Flange Adapter	B	2.0
MEC Universal Flange Kit			
Part No.	**Description**	**Flange Type**	**Weight (lbs.)**
ME840-10F	1-1/4" FNPT 4 Bolt Flange Adapter Plate w/ Bolts & O-Ring	A	3.0
ME841-10F	1-1/4" Socket Weld 4 Bolt Flange Adapter Plate w/ Bolts & O-Ring	A	2.9
ME840-12F	1-1/2" FNPT 4 Bolt Flange Adapter Plate w/ Bolts & O-Ring	A	2.8
ME841-12F	1-1/2" Socket Weld 4 Bolt Flange Adapter Plate w/ Bolts & O-Ring	A	2.7
ME840-16F	2" FNPT 4 Bolt Flange Adapter Plate w/ Bolts & O-Ring	A	2.5
ME841-16F	2" Socket Weld 4 Bolt Flange Adapter Plate w/ Bolts & O-Ring	A	2.3
MEP840-10	1-1/4" FNPT 4 Bolt 90° Flange Adapter Elbow w/ Bolts & O-Ring	A	4.8
MEP841-10	1-1/4" Socket Weld 4 Bolt 90° Flange Adapter Elbow w/ Bolts & O-Ring	A	4.7
MEP840-12	1-1/2" FNPT 4 Bolt 90° Flange Adapter Elbow w/ Bolts & O-Ring	A	4.6
MEP841-12	1-1/2" Socket Weld 4 Bolt 90° Flange Adapter Elbow w/ Bolts & O-Ring	A	4.6
MEP840-16	2" FNPT 4 Bolt 90° Flange Adapter Elbow w/ Bolts & O-Ring	A	4.3
MEP841-16	2" Socket Weld 4 Bolt 90° Flange Adapter Elbow w/ Bolts & O-Ring	A	4.2

NOTE: Flanges available in Stainless Steel - i.e. ME841SS-16F

HIGH CAPACITY 3" BOBTAIL PUMP DISCHARGE ELBOWS

MEC Excela-Flange™ SERIES

These high capacity bobtail pump discharge elbows are designed to maximize the efficiency and flow rate at the outlet of the pump while minimize pressure loss due to the 90 degree directional change at the pump outlet needed to direct product to the rear of the vehicle where it is being dispensed. The MEP840H has carefully modeled radiuses and contours that allow it to flow over 50% more than other standard discharge elbows with 50% less pressure differential, thereby minimizing pump wear and maximizing pumping efficiency. When paired with other Excela-Flange™ products the bobtail can perform up to its full potential. The MEP840H series is standard with a 1/4" FNPT plugged test port and is available with NPT or socket weld outlet. Suitable for use in mobile or stationary applications.

FEATURES

- All steel or stainless steel construction for maximum durability and weldability
- Available in 2" FNPT or 2" Socket Weld configurations
- Zinc Plated for maximum corrosion resistance
- Approved for use in LPG or NH_3 service
- Rated 400 WOG
- Includes mounting bolts and O-ring
- 1/4" FNPT plugged test port

Part No.	Description	Flange Type	Fits Pump Model(s)
MEP840H-16*	2" FNPT 4 Bolt High Capacity 90° Flange Adapter Elbow w/ 1/2-13 Bolts & O-Ring	Type A	TLGLF3
MEP841H-16*	2" Socket Weld 4 Bolt High Capacity 90° Flange Adapter Elbow w/ 1/2-13 Bolts & O-Ring		TLGLF3
MEP840HC-16	2" FNPT 4 Bolt High Capacity 90° Flange Adapter Elbow w/ 3/8-16 Bolts & O-Ring		Z3200
MEP841HC-16	2" Socket Weld 4 Bolt High Capacity 90° Flange Adapter Elbow w/ 3/8-16 Bolts & O-Ring		Z3200

*Available in stainless steel - i.e. ME840HSS-16

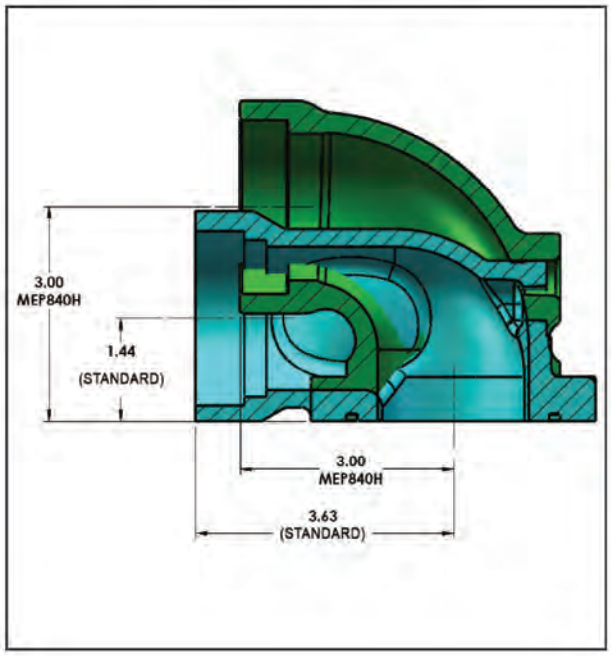

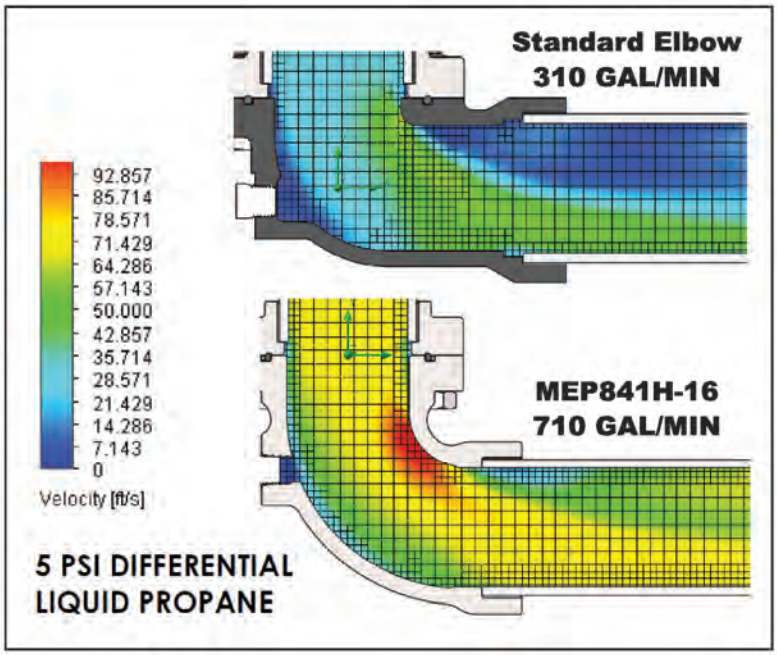

HIGH FLOW BYPASS VALVES

for BOBTAIL TRUCK / PLANT APPLICATIONS

These bypass valves are specifically designed to protect truck and plant pumps from damage due to excessive pressure while providing the industry's best bypass flow rates across a full range of set pressures. They feature wide open flow channels with an orifice weep hole chamber to prevent the valve from slamming open / closed. The weep hole chamber also helps prevent valve seat chatter by allowing constant pressure communication between both the upstream and downstream side of the seat.

FEATURES

- All ductile iron body and bonnet
- All stainless steel wetted components
- Heavy duty protective stem cap
- Wide open flow channels for industry best flow rates
- Orifice weep hole to maintain constant pressure above and below valve seat
- Large range of set pressure springs
- Weldable steel NPT and socket weld flanges
- Zinc dichromate finish for maximum corrosion resistance
- Available with or without flanges factory assembled
- Flanges available 1-1/4" through 2" NPT and socket weld construction
- Universal 4 bolt, flanged body configuration
- Two 1/4" FNPT plugged auxiliary pressure ports
- Factory set at 125 PSI
- Alternative springs available: ME840-16-108-40 (20-40 PSI)
  ME840-16-108-70 (40-70 PSI)
  ME840-16-108-90 (70-90 PSI)
  ME840-16-108-150 (125-150 PSI)

ME840-16/125

c UL us

Part No.	Description	Standard Spring Range(1)	Flange Type(2)
ME840-10-125	1-1/4" FNPT High Flow Bypass Valve	90-125 PSI	A
ME841-10-125	1-1/4" Socket Weld High Flow Bypass Valve	90-125 PSI	A
ME840-12-125	1-1/2" FNPT High Flow Bypass Valve	90-125 PSI	A
ME841-12-125	1-1/2" Socket Weld High Flow Bypass Valve	90-125 PSI	A
ME840-16-125	2" FNPT High Flow Bypass Valve	90-125 PSI	A
ME840C-16-125	2" FNPT Classic Flow Bypass Valve	90-125 PSI	A
ME841-16-125	2" Socket Weld High Flow Bypass Valve	90-125 PSI	A
ME840-125	1-1/4" -2" Universal High Flow Bypass w/o Flanges	90-125 PSI	B

(1) Alternate spring ranges available. Please see replacement parts section in back of catalog
(2) See previous page for flange opti

ME840-16-104
Standard Poppet

ME840C-16-104
Classic Poppet
*Designed to create higher differential pressure and increased poppet travel in low flow applications such as bobtails

HIGH FLOW BYPASS VALVES

for DISPENSING APPLICATIONS

Intended for use in small cylinder filling applications as a bypass and primer valve for turbine style dispensing pumps. These bypass valves feature a special "check ball" mechanism that helps eliminate vapor from liquid while keeping the pump flooded and properly primed. The priming and vapor elimination features in combination with the high flow bypass design significantly reduces pump wear and promotes seal longevity.

FEATURES

- Ductile iron body and bonnet construction
- Large range of set pressure springs
- Two 1/4" FNPT plugged auxiliary pressure ports (outlet side)
- Stainless steel main valve poppet
- Heavy duty protective stem cap
- Available in 3/4" & 1" FNPT threaded versions
- Factory set at 125 PSI
- Durable powder coat finish
- Alternative springs available: ME840-8-108-60 (25-60 PSI)
  ME840-8-108-225 (100-225 PSI)

ME840-6-150

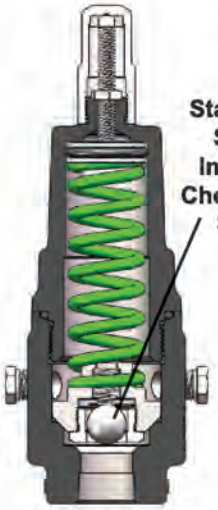

ME840-8-150

Part No.	Description	Standard Spring Range*
ME840-6-150	3/4" FNPT High Flow Bypass Valve	50-150 PSI
ME840-8-150	1" FNPT High Flow Bypass Valve	50-150 PSI

* Alternate spring ranges available. Please see replacement parts section in back of catalog

HIGH FLOW BYPASS VALVES

for PLANT APPLICATIONS

Specifically designed for plant systems where maximum bypass flow is necessary to protect the pump from rapid pressure changes or over pressurization. Perfectly suited for 4" base mount pumps or larger pump applications.

FEATURES

- Ductile iron body and bonnet construction
- All stainless steel internal wetted components
- Bonnet / seat positioned at 35° angle for maximum product flow
- Downstream bleed port to boost product flow during bypass
- Two 1/4" FNTP plugged auxiliary pressure ports
- Heavy duty protective stem cap
- Factory set at 100 PSI
- Durable powder coat finish

ME840-24/100

ME840-24-3F

Part No.	Description	Standard Spring Range*
ME840-24-100	3" FNPT High Flow Bypass Valve	50-100 PSI
ME840-24-200	3" FNPT High Flow Bypass Valve	100-200 PSI
ME840-24-3F-100	3" -300# Flanged High Flow Bypass Valve	50-100 PSI
ME840-24-3F-200	3" -300# Flanged High Flow Bypass Valve	100-200 PSI

* Alternate spring ranges available. Please see replacement parts section in back of catalog

HOSE END VALVES

HIGH FLOW & LOW EMISSION

These hose end valves are leading the industry in minimal product loss during disconnect without sacrificing flow. They have instant full-on flow with the added protection of a quick closing, self-locking handle to prevent accidental opening of the valve during transport. They are designed to be used at the end of a filling hose on a bobtail, dispensing system or nurse tank.

FEATURES

- All stainless steel component construction
- Molded and riveted on valve main seal
- Vents less than .50cc for minimal loss of product at disconnect
- Self-locking toggle handle prevents accidental valve opening
- Toggle handle and stem assembly rotate 360°
- Durable ductile iron valve body with automotive grade powder coat finish
- Stainless steel 1-3/4" female Acme insert cast into the handle
- No additional adapters or connectors needed for operation
- Optional extended version offers 6 inches of additional reach for filling underground containers or other hard to reach applications
- Optional composite style offers a durable lightweight handle that is resistant to frosting and cold transfer during the filling operation
- Optional factory installed *EZTurn* stainless steel swivel

New
High Flow
Model

ME800

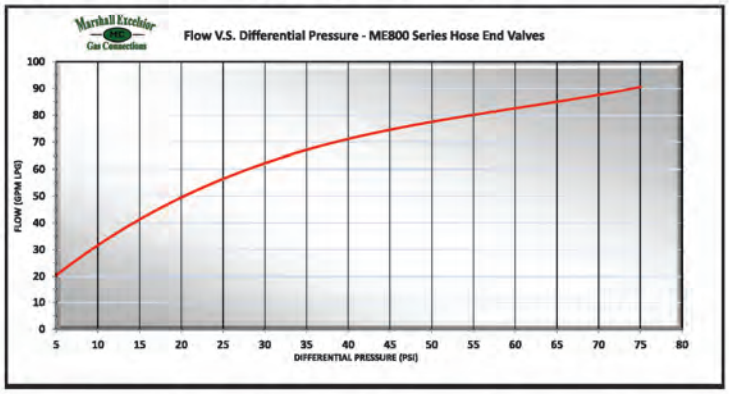

ME800GWS

For LGas
& NH_3

ME800G

Part No.	Inlet (FNPT)	Outlet (F. Acme)	Handle Style	Handle Material	Factory Installed E-Z Turn Swivel	Extended Version	Accessories
							Holster
ME800	1"	1-3/4"	Standard	Aluminum	No	No	MEP801
ME800-6	3/4"	1-3/4"	Standard	Aluminum	No	No	MEP801
ME800WS	1"	1-3/4"	Standard	Aluminum	Yes	No	MEP801
ME800C	1"	1-3/4"	Standard	Composite	No	No	MEP801
ME800CWS	1"	1-3/4"	Standard	Composite	Yes	No	MEP801
ME800G	1"	1-3/4"	Fluted	Aluminum	No	No	MEP801
ME800G-6	3/4"	1-3/4"	Fluted	Aluminum	No	No	MEP801
ME800GWS	1"	1-3/4"	Fluted	Aluminum	Yes	No	MEP801
ME800GC	1"	1-3/4"	Fluted	Composite	No	No	MEP801
ME800GCWS	1"	1-3/4"	Fluted	Composite	Yes	No	MEP801
ME800EXT	1"	1-3/4"	Standard	Aluminum	No	Yes	No
ME800EXTWS	1"	1-3/4"	Standard	Aluminum	Yes	Yes	No

ME800EXTWS

Made in the
U.S.A.

HOSE END VALVE LOCK

Designed to prevent valve operation while in place, eliminating the possibility of accidental discharge and/or theft of product. Simply slide the lock over the handle/ bonnet of the hose end or quick acting dispensing valve. For maximum security a common padlock can be installed.

FEATURES

- All stainless steel construction
- 3/8" diameter through holes for standard 2-1/2" shackle style padlock

Part No.	Fits	Accessories	
		2-1/2" Deep Shackle Padlock	
		Keyed Alike	Keyed Different
ME540	ME800, ME810, ME820 Series	ME540P-KA	ME540P-KD

HOSE END VALVE HOLSTERS

Designed to provide a durable and convenient receptacle to store bobtail hose end delivery valves during over-the-road transit. This holster can be mounted fully above deck or partially below deck in left or right hand hose reel applications with an ergonomic angle providing optimum conditions for delivery personnel.

FEATURES

- All aluminum and stainless steel construction
- Urethane anti-vibration valve sleeve to prevent incidental damage to delivery valve
- Machined adjustment ribs for easy, secure height adjustment
- Deck backing plate and all mounting hardware supplied

Part No.	Description	Fits	Accessories
MEP801	Bobtail Hose End Valve Holster-Aluminum	ME800 Series	MEP801H (Urethane Weather Hood)
MEP802	Bobtail Hose End Valve Holster-Aluminum w/ All Weather Hood	ME800 Series	MEP801-04 (Urethane Holster Strap)
MEP804	Bobtail Quick-Jaw Hose End Valve Holster -Aluminum w/ All Weather Hood	ME800 Series, AL363 or AL366 (Squibb Taylor)	MEP801H (Urethane Weather Hood) MEP801-04 (Urethane Holster Strap)

HOSE END SWIVEL CONNECTIONS

The *EZTurn* hose end swivel connector allows the hose end valve to rotate 360° creating an easier connection to the tank filler valve while under pressure. It also promotes hose life by preventing twisting and kinking during reeling and unreeling from hose reel.

FEATURES

- All stainless steel construction for maximum durability and corrosion resistance
- Large bearing surface for increased strength and durability
- 360° rotation under maximum working pressure of 400 psig
- Our UL LISTED seal pack design allows for extremely long life with no maintenance required
- Straight through bore for unobstructed flow characteristics
- See low emission hose end valves for factory installed *EZTurn*

For LP-Gas & NH_3

Part No.	Inlet (FNPT)	Outlet (MNPT)
ME850SS-6	3/4"	3/4"
ME850SS-6/8	3/4"	1"
ME850SS-8	1"	1"
ME850SS-8/6	1"	3/4"
ME850SS-10/8	1-1/4"	1"

GROUNDING STUD

Designed to help prevent static electricity from being generated due to friction from the pump. In some cases static electricity can build-up enough to create an ignition source and cause an explosion.

Part No.	Thread
ME4H	3/8"-16

SMART INTERLOCK TECHNOLOGY

Designed to prevent a vehicle from being operated while the hose end delivery valve, loading line or wheel chocks are in use. The smart interlock technology connects directly to the Allison Automatic Transmission through the "Auxiliary Function Range Inhibit" or braking system for manual transmission vehicles. This revolutionary system incorporates the industry's best and most durable sensor, TURCK - which is backed with a lifetime product warranty.

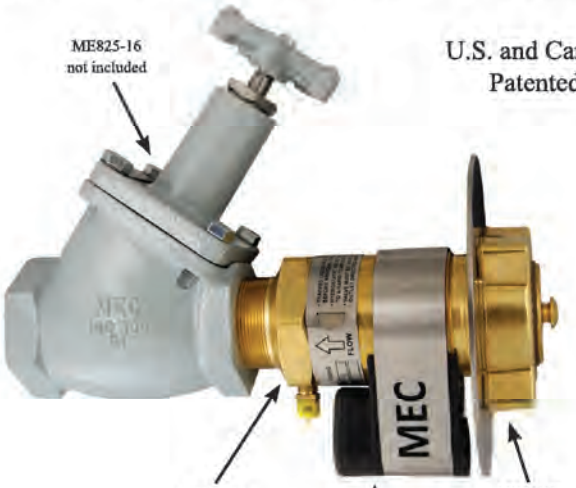

U.S. and Canada Patented

ME868PIB

U.S. PATENT #8,210,306

SMART INTERLOCK TECHNOLOGY FEATURES

- "Potted" TURCK proximity switch for maximum weather resistance and security against vibration
- Supplied with water tight conduit and necessary wiring hardware to reach 5' below deck with water tight receptacle plug

SENSOR BRACKET ASSEMBLY FEATURES

- Smart interlock technology
- Molded urethane sensor body housing for durability and maximum sensor protection
- Stainless steel all weather mounting band and hardware

Made in the U.S.A.

ME200PIBK

ME890PIB

ME217PIB

Smart Interlock Technology

MEP801PIH
ME800
Not Included

U.S. PATENT
#8,132,639

MEP801PIK

Part No.	Description	Temperature Range	Accessories
ME200PIB	Sensor Bracket Assembly for ME200 Wheel Chocks	-20° to +160° F.	ME200EXT (Standoff Extension Kit)
ME200PIBK	Sensor Bracket Assembly with ME200 Wheel Chocks	-20° to +160° F.	
ME217PIB	Sensor Bracket Assembly for ME217 Series	-20° to +160° F.	MEP801PC/20 (20' Proximity Cable) MEP801PC/30 (30' Proximity Cable) Includes Water Tight Receptacle Plug
ME503PIB	Sensor Bracket Assembly for ME503-16 & ME252-16	-20° to +160° F.	
ME807PIB	Sensor Bracket Assembly for ME807 Series	-20° to +160° F.	
ME808PIB	Sensor Bracket Assembly for ME808 Series	-20° to +160° F.	
ME868PIB	Sensor Bracket Assembly for ME868 Valve Series	-20° to +160° F.	
MEP801PIH	Sensor Assembly with MEP801 Hose End Valve Holster	-20° to +160° F.	
MEP802PIH	Holster W/Proximity Interlock Sensor Assembly with All Weather Hood	-20° to +160° F.	
MEP804PIH	Bobtail Quick-Jaw Hose End Valve Holster w/ Proximity Interlock Sensor Assembly	-20° to +160° F.	
MEP801PIK	Interlock Retro Fit Kit for MEP801 Hose End Valve Holster	-20° to +160° F.	
MEP801PIKL	Low Temperature Interlock Retro Fit Kit for MEP801 Hose End Valve Holster	-50° to +160° F.	
ME890PIB	Universal Sensor Bracket Assembly for Enclosures	-20° to +160° F.	

MEP802PCK/20

Smart Interlock Technology Wiring Harness Kits						
Part No.	Description	No. of Relays	LED Power Indicator	Inline Fuse	Cable Length	Accessories
MEP801PCK/20	Wiring Harness Kit	1	Yes	Yes	20'	MEP801PC/20 (20' Proximity Cable) MEP801PC/30 (30' Proximity Cable) Includes Water Tight Receptacle Plug
MEP801PCK/30	Wiring Harness Kit	1	Yes	Yes	30'	
MEP802PCK/20	Wiring Harness Kit	2 (1)	Yes	Yes	20'	
MEP802PCK/30	Wiring Harness Kit	2 (1)	Yes	Yes	30'	
MEP803PCK/30	Wiring Harness Kit	3 (2)	Yes	Yes	30'	

(1) One additional cable required (MEP801PC/20 or MEP801PC/30)
(2) Two additional cables required (MEP801PC/20 or MEP801PC/30)

QUICK ACTING DISPENSING VALVES

Dispensing valves are designed to be used at the end of a filling hose for bobtail, dispensing system or nurse tank filling operations. These valves have instant full-on flow with the added protection of a quick closing, self-locking handle to prevent accidental opening of the valve during transport.

ME820 Series

ME810 Series

For LP-Gas & NH_3

FEATURES

- All stainless steel internal components
- Self-locking toggle handle prevents accidental operation
- Durable ductile iron valve body with automotive grade powder coat finish
- Toggle handle and stem assembly rotate 360°
- Stainless steel factory installed vent valve

Part No.		Inlet & Outlet (FNPT)	No. of Side Ports	Accessories		
				MNPT x 1-3/4 F. Acme Adapter		
Angle	Globe			Short Brass	Short Steel *	Extended Steel *
ME810-4	**ME820-4**	1/2"	1	ME110 ME110C	—	ME635-4 ME635G-4
ME810-6	**ME820-6**	3/4"	1	ME111 ME111C	ME111S ME111SC	ME635-6 ME635G-6
ME810-8	**ME820-8**	1"	1	ME112 ME112C	ME112S ME112SC	ME635-8 ME635G-8

* Rated for LP-Gas & NH_3

ME821 Series

For LP-Gas & NH_3

Part No.	Body Style	Inlet & Outlet (FNPT)	No. of Side Ports	Accessories		
				MNPT x 1-3/4 F. Acme Adapter		
				Short Brass	Short Steel (1)	Extended Steel (1)
ME821-4	Globe	1/2"	2	ME110 ME110C	—	ME635-4 ME635G-4
ME821-6	Globe	3/4"	2	ME111 ME111C	ME111S ME111SC	ME635-6 ME635G-6
ME821B-4 (2)	Globe	1/2"	2	ME110 ME110C	—	ME635-4 ME635G-4
ME821B-6 (2)	Globe	3/4"	2	ME111 ME111C	ME111S ME111SC	ME635-6 ME635G-6

(1) Rated for LP-Gas & NH_3
(2) Includes MEJ400 Brass Vent Valve

FEATURES

- All stainless steel internal components
- Reduced size and weight for easier handling
- Self-locking toggle handle prevents accidental operation
- Durable ductile iron valve body with automotive grade powder coat finish
- Toggle handle and stem assembly rotate 360°
- Factory installed 1/4" FNPT plugged ports

HOSE END FILL ADAPTERS

These adapters are intended to be attached to the LP-Gas delivery truck hose outlets. They feature minimal flow restriction which allows for fast delivery while providing an integral check valve to prevent further product loss if the tank fill valve fails to close. In the event the tank fill valve should fail, leave the fill adapter connected to the fill valve and disconnect the filler hose end valve. Then place the filler valve cap onto the fill adapter. The tank fill valve should be repaired immediately.

ME570

To increase flow up to 30 percent over standard hose end filler adapters use the ME578 hose end fill adapter. It is a full-flow, manually operated hose end fill adapter where the user controls whether the valve is open or closed, providing maximum protection against product discharge.

ME571

ME572

ME574

ME574EXT

ME578

FEATURES

- Integral breakaway feature in the event of truck roll away leaving check intact on tank
- ME570, ME572, ME574, ME578 shortest overall height in the industry allowing adapters to fit inside tank hood
- ME571 has a floating internal seat design which allows check to swivel freely when installed on hose end valve
- ME571H has same features as standard ME571 but with **30% MORE FLOW**
- ME578 has a full-port design which allows for full flow
  - Removable shutoff key and key ring supplied
- Extended versions provide an additional 7" for use on underground tanks
  - Prevents pinching or cutting of the delivery hose on the protective tank collar
  - Eliminates dangerous extensions that do not incorporate the appropriate fill check device
  - Eliminates unsafe stacking of multiple fill check adapters to obtain the desirable fill connection height
  - Overall length allows adapter to fit inside protective tank collar
  - Optional heavy duty aluminum handle with a stainless steel 1-3/4" female Acme insert cast into the handle

ME571H

ME572EXTHD

c UL us

Part No.	Filler Valve F. Acme Connection	Hose End M. Acme Connection	Handle Style	Handle Material	Swivels	Factory Installed Vent Valve	Extended Version OAL (2)	Additional Keys
ME570	1-3/4"	1-3/4"	Standard	Brass	No	No	—	—
ME571	1-3/4"	1-3/4"	Standard	Brass	Yes (1)	No	—	—
ME571H	1-3/4"	1-3/4"	Standard	Brass	Yes (1)	No	—	—
ME572	1-3/4"	1-3/4"	Standard	Brass	Yes	No	—	—
ME572EXT	1-3/4"	1-3/4"	Standard	Brass	Yes	No	7.789"	—
ME572EXTHD	1-3/4"	1-3/4"	Heavy Duty	Cast Aluminum	Yes	No	7.790"	—
ME574	1-3/4"	1-3/4"	Standard	Brass	Yes	Yes	—	—
ME574EXT	1-3/4"	1-3/4"	Standard	Brass	Yes	Yes	7.789"	—
ME574EXTHD	1-3/4"	1-3/4"	Heavy Duty	Cast Aluminum	Yes	Yes	7.790"	—
ME578	1-3/4"	1-3/4"	Standard	Brass	Yes	No	—	ME578-02
ME578C	1-3/4"	1-3/4"	Heavy Duty	Brass	Yes	No	—	ME578-02

(1)) ME571 and ME571H allows the hose end valve to swivel while connected to the filler hose end adapter
(2)) OAL includes free-spinning ACME caps

EXCESS FLOW WARNING

An excess flow valve is a protective device to help control the discharge of product in the event of complete breakage of pipe lines or hose rupture. However, an excess flow valve can only offer limited protection from gas discharge, because it will only close under those conditions which cause the flow through the valve to exceed its rated closing flow, and even when closed it necessarily allows some "bleed" past the valve.

Excess flow check valves have helped minimize gas loss in many incidents involving breakage of hoses and transfer piping. Thus, they do provide a useful safety function in LP-Gas systems. However, there have also been transfer system accidents where excess flow valves have been ineffective in controlling gas loss due to a variety of conditions and to the inherent limitations of these valves. This bulletin explains the protection excess flow valves can offer, points out conditions which can interfere with that protection, and offers suggestions for effective excess flow valve installation.

If any of the following conditions are present, an excess flow valve is not designed to close and may not provide protection:

1. The piping system restrictions (due to pipe length, branches, reduction in pipe size, or number of other valves) decrease the flow rate to less than the valve's closing flow. (Valve should be selected by closing flow rating—not just by pipe size).
2. The break or damage to the downstream line is not large enough to allow enough flow to close the valve.
3. A shutoff valve in the line is only partially open and will not allow enough flow to close the excess flow valve.
4. LP-Gas pressure upstream of the excess flow valve, particularly due to low temperature, is not high enough to produce a closing flow rate.
5. Foreign matter is lodged in the valve and prevents closing.
6. A build-up of process material, which may be found in LP-Gas, may occur over a period of time causing the valve to stick open and prevent proper operation.
7. The piping break or damage occurs upstream of an in-line excess flow valve, so the escaping product is not passing through the valve.
8. The flow through the valve is in the wrong direction. (Excess flow valves only respond to flow in one direction.)
9. The excess flow valve has been damaged, or is otherwise not in operating condition.

Excess flow valves have numerous conditions where the valve may not operate correctly and should not be the sole means in the event a pipe is damaged and product needs to be controlled. It is recommended that another shutoff protection device be installed in addition to or instead of an excess flow valve to control the escape of product when a pipe is damaged.

Where excess flow valves are installed,, they should be checked to see that:

1. They are installed in the correct direction—the arrow on the valve indicates the shutoff direction. (Excess flow valves only respond to flow in one direction.)
2. The flow rating on the valve is proper for the installation. The rating must be above the normal system flow, but no higher than necessary, to prevent "nuisance" closing in normal conditions. If the manufacturer's catalog information is not sufficient, the valve suppliers can provide sizing assistance.
3. To help avoid separating the upstream piping and valve, an in-line excess flow valve is installed to help pipe damage occur downstream.

When the excess flow valves can be examined separate from the line (before the installation or if removed for system maintenance), they should be checked to see that the parts are in good condition and that the poppet can be pushed fully closed.

Testing of Excess Flow Valves

In order to test an excess flow valve in a piping system, the flow through the valve must exceed the valve's closing rating. This test should only be attempted by trained personnel familiar with the process. If no one at the facility has experience in proper testing, outside expert help should be obtained. The exact procedure used may vary with the installation, gas discharge exposure, and availability of equipment.

In general, most testing makes use of the fact that excess flow valves are "surge sensitive" and will close quicker under a sudden flow surge than under steady flow. A sufficient surge can often be created by using a quick closing valve to control sudden, momentary flow into a tank or piping section containing very low pressure. An audible click from the excess flow valve (and corresponding stoppage of flow) indicates its closure.

A test involving venting gas to the atmosphere is hazardous and may be impractical or illegal.

Any test of any excess flow valve will not prove that the valve will close in an emergency situation, due to reasons cited before. This test will only check the valve's condition, and the flow rate sizing for those test conditions.

For additional information on excess flow valves contact your local distributor, Marshall Excelsior and refer to NFPA 58.

MEC Excela-Flange™ SERIES

Marshall Excelsior offers the **largest closing flow selection** in the industry. These excess flow valves are intended for use in liquid or vapor LP-Gas or NH_3 systems. These valves can be used for filling, withdrawal and vapor equalization in containers or line applications, specifically long lines or branch piping. This product is designed to protect against excessive discharge as a result of a break in the hose or piping system. The excess flow feature is designed to remain closed after activation until the system pressure equalizes on both sides of the shutoff poppet.

The ME883S-16 Series valves feature our new modular Excela-Flange 4 bolt inlet flange design that can easily be adapted to both NPT thread or socket weld type B companion flanges ranging from 1 1/4" to 2" in diameter making it universal to piping sizes within this range. This innovative system allows installers the ability to eliminate unnecessary extra connections as well as possible leak points by integrating a convenient 4 bolt flange union at the valve inlet.

WARNING: An excess flow valve will not activate if there is a break or leak downstream of the valve that does not equal or exceed the closing flow of the valve or if the excess flow valve installed exceeds the flow capacity of the system. See the Excess Flow Warning page for more information regarding the use of excess flow devices.

FEATURES

- All models feature stainless steel stem, spring and valve guide
- Valve body: Ductile Iron / Shutoff poppet assy: zinc plated steel & stainless steel
- Available 2" NPT x 4 Bolt Type A Flange
- All models can be used with LP Gas or NH_3
- Available in a wide variety of closing flow rates - see chart below
- **2" models available with CF8M Stainless Steel body & bonnet**

ME883S-16/105
2" NPT x 4 Bolt Flange

NEW!
ME883SS-16/105
SS 2" NPT x 4 Bolt Flange

Part No.*	Description	Material	Closing Flow	Mating Flange Type	Weight (lbs.) Standard	Weight (lbs.) Stainless Steel
ME883S-10/32	Excela-Flange™ 1-1/4" MNPT x 4 Bolt Type A Flange Excess Flow	Ductile	32	B	4.1	3.5
ME883S-10/42	Excela-Flange™ 1-1/4" MNPT x 4 Bolt Type A Flange Excess Flow	Ductile	42	B	4.1	3.5
ME883S-16/80	Excela-Flange™ 2" MNPT x 4 Bolt Type A Flange Excess Flow	Ductile	80	B	4.23	4.0
ME883S-16/105	Excela-Flange™ 2" MNPT x 4 Bolt Type A Flange Excess Flow	Ductile	105	B	4.23	4.0
ME883S-16/114	Excela-Flange™ 2" MNPT x 4 Bolt Type A Flange Excess Flow	Ductile	114	B	4.23	4.0
ME883S-16/140	Excela-Flange™ 2" MNPT x 4 Bolt Type A Flange Excess Flow	Ductile	140	B	4.23	4.0

* Avaialble in Stainless Steel - Add "SS" after the prefix part number i.e. ME883SS-16/32

Accessories	
Part No.	Description
MEP873	4 Bolt Type A Flange Valve Installation Tool w/ 1" Square Drive
MEP183-102	Replacement Torque Posts

WARNING - Reducing outlet pipe size below nominal inlet diameter could result in excess flow feature failing to close as designed
Liquid Butane Capacity = Flow Rate x .94
Liquid Anhydrous Ammonia Capacity = Flow Rate x .90

MEP873

"Throw away that pipe wrench for **GOOD!**"

EXCESS FLOW VALVES

Marshall Excelsior offers the Largest Closing Flow Selection in the industry. These excess flow valves are intended for use in liquid or vapor LP-Gas or NH_3 systems. These valves can be used for filling, withdrawal and vapor equalization in containers or line applications, specifically long lines or branch piping. This product is designed to protect against excessive discharge as a result of a break in the hose or piping system. The excess flow feature is designed to remain closed after activation until the system pressure equalizes on both sides of the shutoff poppet.

NOTE: Intended for direct installation into pressure vessels and/or piping.

WARNING: An excess flow valve will not activate if there is a break or leak downstream of the valve that does not equal or exceed the closing flow of the valve or if the excess flow valve installed exceeds the flow capacity of the system. See the Excess Flow Warning page for more information regarding the use of excess flow devices.

FEATURES

- All stainless steel internal components
- Integral breakaway feature leaves valve assembly intact with internal hex broach for easy removal

ME880 Series

ME880S Series

ME882S Series

Made in the U.S.A.

Part No.			Inlet MNPT	Outlet FNPT	Closing Flow GPM Propane
Brass	Steel*	Stainless Steel*			
ME880-4/1.8	—	—	1/4"	1/4"	1.8
ME880-6/4.6	ME880S-6/4.6	ME880SS-6/4.6	3/4"	3/4"	4.6
ME880-6/14	ME880S-6/14	ME880SS-6/14	3/4"	3/4"	14
ME880-6/17	ME880S-6/17	ME880SS-6/17	3/4"	3/4"	17
ME880-6/22	ME880S-6/22	ME880SS-6/22	3/4"	3/4"	22
ME880-6/28	ME880S-6/28	ME880SS-6/28	3/4"	3/4"	28
ME880-10/32	ME880S-10/32	ME880SS-10/32	1-1/4"	1-1/4"	32
ME880-10/42	ME880S-10/42	ME880SS-10/42	1-1/4"	1-1/4"	42
ME880-12/95	—	—	1-1/2"	1-1/2"	95
ME880-16/80	ME880S-16/80	ME880SS-16/80	2"	2"	80
ME880-16/105	ME880S-16/105	ME880SS-16/105	2"	2"	105
ME880-16/114	ME880S-16/114	ME880SS-16/114	2"	2"	114
ME880-16/140	ME880S-16/140	ME880SS-16/140	2"	2"	140
—	ME882S-16/80	—	2"	2" MNPT	80
—	ME882S-16/105	—	2"	2" MNPT	105
—	ME882S-16/114	—	2"	2" MNPT	114
—	ME882S-16/140	—	2"	2" MNPT	140
—	ME880S-24/265	—	3"	3"	265
—	ME880S-24/350	—	3"	3"	350
—	ME882S-24/265	—	3"	3" MNPT/2" FNPT	265
—	ME882S-24/350	—	3"	3" MNPT/2" FNPT	350

WARNING - Reducing outlet pipe size below nominal inlet diameter could result in excess flow feature failing to close as designed

Liquid Butane Capacity = Flow Rate x .94
Liquid Anhydrous Ammonia Capacity = Flow Rate x .90

HIGH FLOW BACK CHECK VALVES

MEC Excela-Flange™ SERIES

The ME873S Series valves feature our new modular Excela-flange™ 4 bolt inlet flange design that can be easily adapted to both NPT thread or socket weld type B companion flanges ranging from 1-1/4" to 2" in diameter making it universal to piping sizes within this range. This innovative system allows installers the ability to eliminate unnecessary extra connections as well as possible leak points by integrating a convenient 4 bolt flange union at the valve inlet. Marshall Excelsior High Flow back check valves provide back flow protection to container openings or liquid lines where flow is intended for one direction. The valve is normally held closed until pressure activates the valve when flow is directed into piping or containers causing the back check to open. When flow stops or reverses, the check returns to the closed position. All MEC High Flow Back Check valves are supplied with o-ring soft seats, which can be removed for metal to metal seating. Also available with permanently bonded on main valve seals (SBN).

ME873S-24

ME873SBN -24
(SBN - BONDED SEAT)

NEW!
ME873SS-16

FEATURES

- Universal seat - Remove O-ring seal to create metal to metal seating surface or (SBN) bonded seat
- Up to **20% MORE FLOW** than nearest competitor
- Maximum product flow achieved by full port and stem travel design
- All models feature stainless steel stem, spring and valve guide
- Valve body: Ductile Iron / Shutoff poppet assy: steel & stainless steel
- Available in 1-1/4" NPT, 2" NPT and 3" NPT x 4 Bolt Type A Flange
- All models can be used with LP Gas or NH_3
- Universal 4 bolt flange inlet type A
- **All models now available with CF8M Stainless Steel body & bonnet**

Part No. *	Description	Material	Propane Flow @ 10 PSIG Pressure Differential	Mating Flange Type	Weight (lbs.)	
					Standard	Stainless Steel
ME873S-10	Excela-flange™ 1-1/4" MNPT x 4 Bolt Type A Flange BCV	Ductile	61	B	4.1	3.5
ME873SBN-10	Excela-flange™ 1-1/4" MNPT x 4 Bolt Type A Flange BCV (SBN) Bonded Seat	Ductile	61	B	4.1	3.5
ME873S-16	Excela-flange™ 2" MNPT x 4 Bolt Type A Flange BCV	Ductile	187	B	4.2	4.0
ME873SBN-16	Excela-flange™ 2" MNPT x 4 Bolt Type A Flange BCV (SBN) Bonded Seat	Ductile	187	B	4.2	4.0
ME873S-24	Excela-flange™ 3" MNPT x 4 Bolt Type A Flange BCV	Ductile	449	B	7.0	7.0
ME873SBN-24	Excela-flange™ 3" MNPT x 4 Bolt Type A Flange BCV (SBN) Bonded Seat	Ductile	449	B	7.1	7.0

* To order Stainless Steel add "SS" after the prefix part number - i.e. ME873SS-16 or ME873SSBN-16
Replacements o-rings available upon request. See Replacement Parts section.

NOTE: Liquid Butane Capacity = Flow Rate x .94
Liquid Anhydrous Ammonia Capacity = Flow Rate x .90

HIGH FLOW BACK CHECK VALVES

MEC Excela-Flange™ SERIES - SOCKET WELD

Made in the U.S.A.

These Excela-Flange™ High Flow Socket Weld Back Check valves lead the industry with up to **20% More Flow** than the nearest competitor. Back check valves provide flow protection to container openings or liquid lines where flow is intended for one direction. The valve is normally closed until pressure activates the valve when flow is directed into piping or containers causing the back check to open. When flow stops or reverses, the check returns to the closed position.

Featuring socket weld connection points, these valves are ideally suited for inline applications where welded piping construction is desired, such as in a bobtail spray fill / bypass return combination line. A perfect companion to the MEC Excela-Flange product line. Only available with metal-to-metal seat due to high heat associated with socket weld construction/installation.

FEATURES

- Up to 20% More Flow than nearest competitor
- Maximum flow achieved by full port and increased stem travel design
- Integral breakaway feature leaves valve assembly intact
- All stainless steel internal components
- High temperature Inconel spring withstands heat from welding

Part No.	Inlet Socket Weld	Outlet Socket Weld	Propane Flow @ 10 PSIG Pressure Differential	Weight (lbs.)
ME870SW-16	2" Female	2" Male	189	1.77
NOTE: Rated for LP-Gas & NH_3				

Liquid Butane Capacity = Flow Rate x .94
Liquid Anhydrous Ammonia Capacity = Flow Rate x .90

HIGH FLOW BACK CHECK VALVES

These back check flow valves lead the industry with up to **20% More Flow** than the nearest competitor. Back check valves provide flow protection to container openings or liquid lines where flow is intended for one direction. The valve is normally closed until pressure activates the valve when flow is directed into piping or containers causing the back check to open. When flow stops or reverses, the check returns to the closed position.

These valves come with dual seating capabilities or an optional bonded soft seat on 2 and 3" models. With the dual seating capabilities, the factory installed O-ring provides a leak-free, soft seat seal which enables repair and maintenance to be done on depressurized plumbing. Remove the O-ring to allow metal-to-metal seating with a minimal leak seal to restrict flow in case of a break in the line.

NOTE: Leaving the O-ring soft seat installed on the valve will require a minimum of 15 psig pressure differential between the transfer line and container to unseat the valve and allow it to fully open.

FEATURES

- Up to **20% More Flow** than nearest competitor
- Maximum flow achieved by full port and increased stem travel design
- Integral breakaway feature leaves valve assembly intact with internal hex broach for easy removal
- All stainless steel internal components
- Dual purpose seat reduces inventory from 2 to 1

ME870 Series
Shown with O-Ring Soft Seat

ME870S Series
Shown with O-Ring Removed for Metal-to-Metal Seat

High Flow Back Check Valves					
Part No.			Inlet FNPT	Outlet MNPT	Propane Flow at 10 PSIG Pressure Differential
Brass	Steel*	Stainless Steel*			
ME870-6	ME870S-6	ME870SS-6	3/4"	3/4"	24
ME870-10	ME870S-10	ME870SS-10	1-1/4"	1-1/4"	61
ME870-12	—	—	1-1/2"	1/2"	112
ME870-16	ME870S-16	ME870SS-16	2"	2"	187
—	ME872S-16	—	2" MNPT	2"	187
—	ME870S-24	—	3"	3"	449
—	ME872S-24	—	2" FNPT/ 3" MNPT	3"	449
—	ME872S-24SP**	—	2" FNPT	3"	449

* Rated for LP-Gas & NH_3
** Includes removable o-ring

ME872S-16

High Flow Back Check Valves w/ Bonded Soft Seat					
Part No.			Inlet FNPT	Outlet MNPT	Propane Flow at 10 PSIG Pressure Differential
Brass	Steel*	Stainless Steel*			
—	ME870SBN-10	—	1-1/4"	1-1/4"	61
—	ME870SBN-16	—	2"	2"	187
	ME872SBN-16	—	2" MNPT	2"	187
—	ME870SBN-24**	—	3"	3"	449
—	ME872SBN-24	—	2" FNPT/ 3" MNPT	3"	449
—	ME872SBN-24SP	—	2" FNPT	3"	449

* Rated for LP-Gas & N_3
** Use for high flow transport applications

ME870SBN-24
Shown with Bonded Soft Seat

Liquid Butane Capacity = Flow Rate x .94
Liquid Anhydrous Ammonia Capacity = Flow Rate x .90

HIGH FLOW DOUBLE BACK CHECK FILL VALVES

Marshall Excelsior High Flow Double Back Check Valves provide back flow protection to container openings or liquid lines where flow is intended in one direction. The valve is normally held closed until pressure activates the valve when flow is directed into piping or containers causing the double back check to open. When flow stops or reverses, both checks return to the closed position. All MEC High Flow Double Back Check Valves are supplied with the correct ACME cap and chain assembly, as well as factory installed hydrostatic relief protection.

FEATURES

- Primary Seat - Creates metal to metal seating surface
- Secondary Seat - bonded nitrile soft seat for a leak free seal
- Up to **20% More Flow** than nearest competitor
- Maximum product flow achieved by full port and stem travel design
- All models feature stainless steel stem, spring and valve guide in body check assembly
- Built in hydrostatic relief valve
- For use with **LP Gas ONLY**

ME869-10/8

ME869-24

Part No.	Description	Propane Flow Differential Pressure		
		10 PSI	25 PSI	50 PSI
ME869-10/10	Double Back Check Valve 1-1/4" MNPT x 2-1/4" M. Acme	75	116	157
ME869-10/8	Double Back Check Valve 1-1/4" MNPT x 1-3/4" M. Acme	51	85	124
ME869-16	Double Back Check Valve 2" MNPT x 3-1/4" M. Acme	195	296	416
ME869-24	Double Back Check Valve 3" MNPT x 3-1/4" M. Acme	347	519	718

HIGH FLOW SINGLE & DOUBLE BACK CHECK FILL VALVES

Marshall Excelsior high flow single & double back check fill valves provide back flow protection to container openings or liquid lines where flow is intended in one direction. The valve is normally held closed until pressure activates the valve when flow is directed into piping or containers causing the back check to open. When flow stops or reverses, the check returns to the closed position. All MEC High Flow Back Check Valves are supplied with the correct ACME cap and chain assembly.

FEATURES

- Double check primary seat creates metal to metal seating surface
- Double check secondary seat is a soft seat for a leak free seal
- Up to **30% MORE FLOW** than nearest competitor
- Maximum product flow achieved by full port and maximum stem travel design
- All models feature a brass stem, stainless steel spring and bronze valve guide in body check assembly
- For use with **LP Gas Only**

ME3197C

Part No.	Description	Differential Flow GPM/ LPG @ 10 PSI
ME3194C	Single Back Check Fill Valve 3-1/4" M. Acme x 3" MNPT	365
ME3197C	Double Back Check Fill Valve 3-1/4" M. Acme x 3" MNPT	285

NOTE: For use with LPG only

ME3194C

Excela-Flange™ 1-1/4" MNPT x 4 BOLT FLANGE

ME991-10 SERIES
1-1/4" MNPT x 4 Bolt Type A
Flanged Internal Valve

The ME991-10 Series valves feature our new modular Excel-Flange™ 4 bolt outlet flange design that can be easily adapted to both NTP thread or socket weld type B companion flanges (ME842 & ME843 Series) ranging from 1-1/4" to 2" in diameter making it universal to piping sizes within this range. This innovative system allows installers the ability to eliminate unnecessary connections as well as possible leak points by integrating a convenient 4 bolt flange union at the valve outlet. Intended for use on bobtail trucks and storage tanks with 1-1/4" threaded connections in directional or bi-directional flow applications. Provides both manual shut-down as well as excess flow closing in the event of the piping being separated from the valve. Can be equipped with manual latch, pneumatic or rotary actuator, open/ closing devices. All valve models are equipped with a break-away feature in the cast body which permits the piping to shear off in the event of side impact, leaving the valve poppet intact and protecting the tank from catastrophic product loss. FOR LIQUID OR VAPOR SERVICE APPLICATIONS.

NOTE: See pages 96-98 for flanged deminsions and installation torque values.

FEATURES

- Durable 316 CF8M stainless steel cast body
- All stainless internal component construction
- Precision machined hard coated stem
- Fully retained nitrile seat disc
- Large variety of excess flow closing values
- Roller cam actuation
- Industry's fastest bleed time
- Removable data plate
- Industry's easiest valve to service
- Standard construction utilizes nitrile seals
- Available with Neoprene, Viton®, or Kalrez® seals
- UL LISTED for LPG & NH_3 service
- Rulon™ bearing on stub shaft
- 4 Bolt universal outlet flange for built in union joint

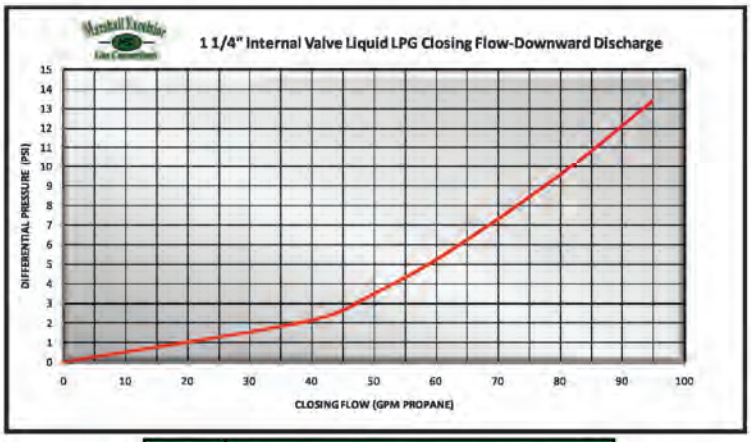

"X"	1-1/4" Valve Liquid Closing Flow Values
35	35 GPM LPG Closing Flow
55	55 GPM LPG Closing Flow
85	85 GPM LPG Closing Flow

NOTE: For NH_3 multiply GPM by .90

Part No.*	Description	Mating Flange Type	Weight (lbs.)
ME991-10-"X"	Excela-Flange™ 1-1/4" MNPT x 4 Bolt Type A Flange Internal Valve - Only	B	5.7
ME991A-10-"X"	Excela-Flange™ 1-1/4" MNPT x 4 Bolt Type A Flange Internal Valve - w/Pneumatic Actuator	B	9.5
ME991AR-10-"X"	Excela-Flange™ 1-1/4" MNPT x 4 Bolt Type A Flange Internal Valve - w/Rotary Actuator	B	10.2
ME991M-10-"X"	Excela-Flange™ 1-1/4" MNPT x 4 Bolt Type A Flange Internal Valve - w/Manual Latch	B	5.7

* Indicate desired excess flow closing value when ordering - see chart for values - i.e. ME991-10-85 (85 GPM)
To order Kalrez® add "K" for Kalrez® after the prefix part number i.e. ME991K-10-35
To order Neoprene add "N" for Neoprene after the prefix part number i.e. ME991N-10-35
To order Viton® add "V" for Viton® after the prefix part number i.e. ME991V-10-35

Viton® and Kalrez® are trademarks of DuPont Performance Elastomers.

Excelerator™ INTERNAL VALVES

1-1/4" THREADED

Intended for use on bobtail trucks and storage tanks with 1-1/4" threaded connections in directional or bi-directional flow applications. Provides both manual shut-down as well as excess flow closing in the event of the piping being separated from the valve. Can be equipped with manual latch, pneumatic or rotary actuator, open/ closing devices. All valve models are equipped with a break-away feature in the cast body which permits the piping to shear off in the event of side impact, leaving the valve poppet intact and protecting the tank from catastrophic product loss. FOR LIQUID OR VAPOR SERVICE APPLICATIONS.

FEATURES

- Durable 316 CF8M stainless steel cast body
- All stainless internal component construction
- Hexagonal installation flats to fit standard 2-3/8" hex socket wrench
- Precision machined hard coated stem
- Fully retained Nitrile seat disc
- Large variety of excess flow closing values
- Roller cam actuation
- Industry's fastest bleed time
- Removable data plate
- Industry's easiest valve to service
- Standard construction utilizes Nitrile seals
- Available with Neoprene, Viton®, or Kalrez® seals
- UL LISTED for LPG & NH_3 service (ME990-10 SERIES ONLY)
- Rulon™ bearing on stub shaft

ME990-10 SERIES

"X"	1-1/4" Valve Liquid Closing Flow Values
35	35 GPM LPG Closing Flow
55	55 GPM LPG Closing Flow
85	85 GPM LPG Closing Flow

NOTE: For NH_3 multiply GPM by .90

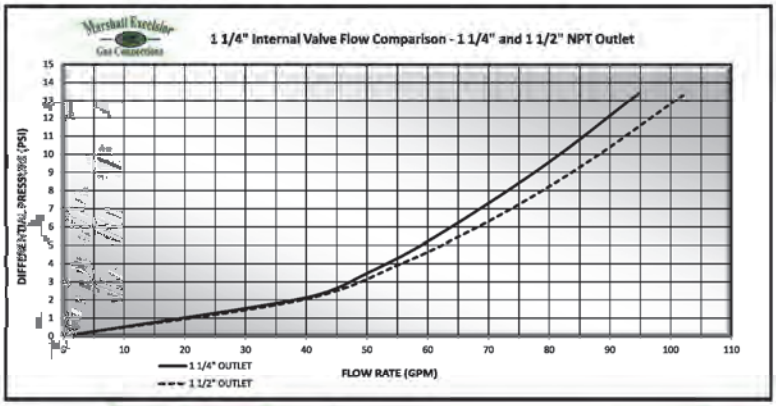

Part No. *	Description
ME990-10-"X"	Excelerator™ 1-1/4" MNPT x 1-1/4" FNPT Internal Valve - Only
ME990-10/12-"X"	Excelerator™ 1-1/4" MNPT x 1-1/2" FNPT Internal Valve - Only
ME990A-10-"X"	Excelerator™ 1-1/4" MNPT x 1-1/4" FNPT Internal Valve - with Pnuematic Actuator
ME990A-10/12-"X"	Excelerator™ 1-1/4" MNPT x 1-1/2" FNPT Internal Valve - with Pnuematic Actuator
ME990AR-10-"X"	Excelerator™ 1-1/4" MNPT x 1-1/4" FNPT Internal Valve - with Rotary Actuator
ME990AR-10/12-"X"	Excelerator™ 1-1/4" MNPT x 1-1/2" FNPT Internal Valve - with Rotary Actuator
ME990M-10-"X"	Excelerator™ 1-1/4" MNPT x 1-1/4" FNPT Internal Valve - with Manual Latch
ME990M-10/12-"X"	Excelerator™ 1-1/4" MNPT x 1-1/2" FNPT Internal Valve - with Manual Latch
ME990M-10-"X"	Excelerator™ 1-1/4" MNPT x 1-1/4" FNPT Internal Valve - with Manual Latch

* Indicate desired excess flow closing value when ordering - see chart for values - i.e. ME990-10-85 (85 GPM
To order Kalrez® add "K" for Kalrez® after the prefix part number i.e. ME990K-10-35
To order Neoprene add "N" for Neoprene after the prefix part number i.e. ME990N-10-35
To order Viton® add "V" for Viton® after the prefix part number i.e. ME990V-10-35

Viton® and Kalrez® are trademarks of DuPont Performance Elastomers.

1-1/4" THREADED TEE BODY

Intended for use on bobtail trucks and storage tanks with 1-1/4" threaded connections in directional or bi-directional flow applications. Provides both manual shut-down as well as excess flow closing in the event of the piping being seperated from the valve. Can be equipped with manual latch, pneumatic or rotary actuator, open/ closing devices. All valve models are equipped with a break-away feature in the cast body which permits the piping to shear off in the event of side impact, leaving the valve poppet intact and protecting the tank from catastrophic product loss. The tee body features an additional FNPT side discharge port . FOR LIQUID OR VAPOR SERVICE APPLICATIONS.

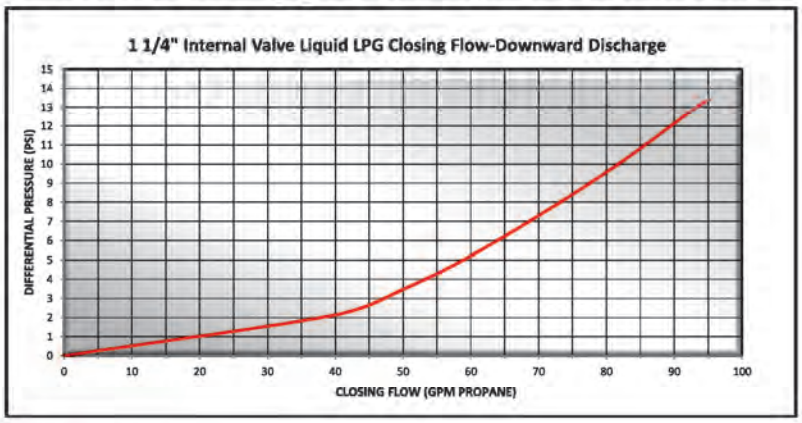

ME992-10 SERIES
1-1/4" NTP Tee Body Internal Valve

FEATURES

- Durable 316 CF8M stainless steel cast body
- All stainless internal component construction
- Precision machined hard coated stem
- Fully retained nitrile seat disc
- Large variety of excess flow closing values
- Roller cam actuation
- Industry's fastest bleed time
- Removable data plate
- Industry's easiest valve to service
- Standard construction utilizes nitrile seals
- Available with Neoprene, Viton®, or Kalrez® seals
- UL LISTED for LPG & NH_3 service
- Rulon™ bearings on stem and stub shafts

"X"	1-1/4" Valve Liquid Closing Flow Values
35	35 GPM LPG Closing Flow
55	55 GPM LPG Closing Flow
85	85 GPM LPG Closing Flow

NOTE: For NH_3 multiply GPM by .90

MEC Excelerator™ 1-1/4" Threaded Tee Body Internal Valves	
Part No. *	**Description**
ME992-10-"X"	**Excelerator™** 1-1/4" MNPT x 1-1/4" FNPT Internal Valve - Only
ME992A-10-"X"	**Excelerator™** 1-1/4" MNPT x 1-1/4" FNPT Internal Valve - with Pneumatic Actuator
ME992AR-10-"X"	**Excelerator™** 1-1/4" MNPT x 1-1/4" FNPT Internal Valve - with Rotary Actuator
ME992M-10-"X"	**Excelerator™** 1-1/4" MNPT x 1-1/4" FNPT Internal Valve - with Manual Latch

* Indicate desired excess flow closing value when ordering - see chart for values- i.e. ME992-10-85 (85 GPM
To order Kalrez® add "K" for Kalrez® after the prefix part number i.e. ME992K-10-35
To order Neoprene add "N" for Neoprene after the prefix part number i.e. ME992N-10-35
To order Viton® add "V" for Viton® after the prefix part number i.e. ME992V-10-35

Viton® and Kalrez® are trademarks of DuPont Performance Elastomers.

Excelerator™ INTERNAL VALVES

1-1/2" THREADED TEE BODY

Intended for use on bobtail trucks, storage tanks and nurse wagons with 1-1/2" threaded connections in directional or bi-directional flow applications. Provides both manual shut-down as well as excess flow closing in the event of the piping being seperated from the valve. Can be equipped with manual latch, pneumatic or rotary actuator, open/ closing devices. All valve models are equipped with a break-away feature in the cast body which permits the piping to shear off in the event of side impact, leaving the valve poppet intact and protecting the tank from catastrophic product loss. The tee body features an additional FNPT side discharge port.
FOR LIQUID OR VAPOR SERVICE APPLICATIONS.

FEATURES

- Durable ductile iron body
- All stainless internal component construction
- Precision machined hard coated stem
- Fully retained nitrile seat disc
- Large variety of excess flow closing values
- Roller cam actuation
- Industry's fastest bleed time
- Removable data plate
- Industry's easiest valve to service
- Standard construction utilizes nitrile seals
- Available with Neoprene, Viton®, or Kalrez® seals
- UL LISTED for LPG & NH_3 service
- Rulon™ bearing on stub shaft
- Supplied with hex socket 1-1/2" port plug for single discharge applications

ME992-12 SERIES
1-1/2" NTP Tee Body Internal Valve

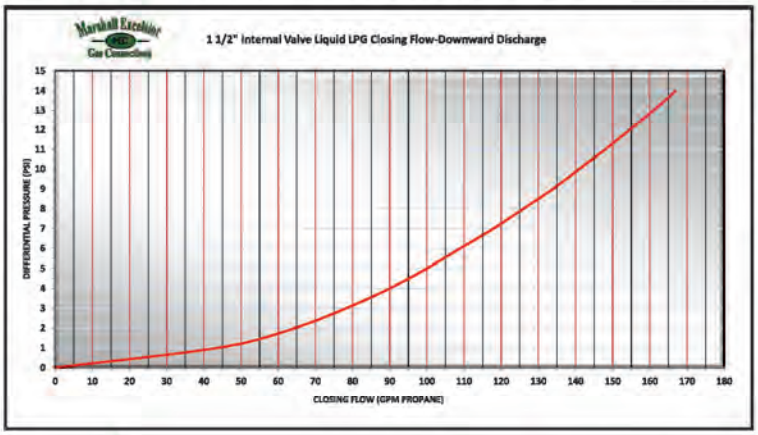

"X"	1-1/2" Valve Liquid Closing Flow Values
50	50 GPM LPG Closing Flow
65	65 GPM LPG Closing Flow
85	85 GPM LPG Closing Flow
110	110 GPM LPG Closing Flow
120	125 GPM LPG Closing Flow

NOTE: For NH_3 multiply GPM by .90

MEC Excelerator™ 1-1/2" Threaded Tee Body Internal Valves	
Part No. *	**Description**
ME992-12-"X"	**Excelerator™** 1-1/2" MNPT x 1-1/2" FNPT Internal Valve - Only
ME992A-12-"X"	**Excelerator™** 1-1/2" MNPT x 1-1/2" FNPT Internal Valve - with Pneumatic Actuator
ME992AR-12-"X"	**Excelerator™** 1-1/2" MNPT x 1-1/2" FNPT Internal Valve - with Rotary Actuator
ME992M-12-"X"	**Excelerator™** 1-1/2" MNPT x 1-1/2" FNPT Internal Valve - with Manual Latch

* Indicate desired excess flow closing value when ordering - see chart for values
i.e. ME992-12-85 (85 GPM)
To order Kalrez® add "K" for Kalrez® after the prefix part number i.e. ME992K-12-85
To order Neoprene add "N" for Neoprene after the prefix part number i.e. ME992N-12-85
To order Viton® add "V" for Viton® after the prefix part number i.e. ME992V-12-85

Viton® and Kalrez® are trademarks of DuPont Performance Elastomers.

2" & 3" THREADED

Intended for use on transport trucks and large storage tanks with 2" or 3" threaded connections in directional or bi-directional flow applications. Provides both manual shut-down and excess flow closing in the event of the piping being separated from the valve. Can be equipped with manual latch, pneumatic or rotary actuator open/ closing devices. All valve models are equipped with a break-away feature in the cast body which permits the piping to shear off in the event of side impact, leaving the valve poppet intact and protecting the tank from catastrophic product loss.

FOR LIQUID OR VAPOR SERVICE APPLICATIONS

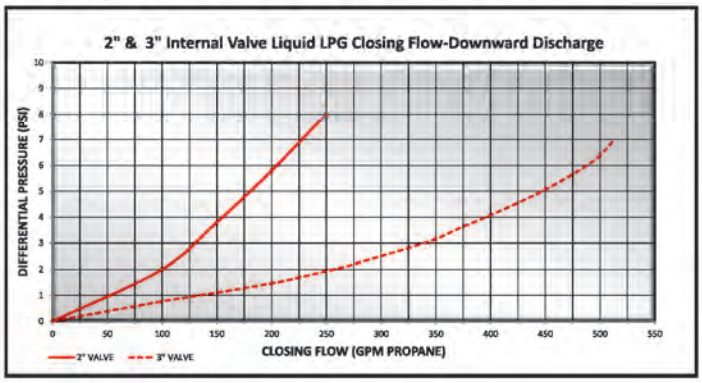

ME990-16 SERIES
2" NTP Threaded Internal Valve

ME990-24 SERIES
3" NTP Threaded Internal Valve

"X"	2" Valve Liquid Closing Flow Values
110	110 GPM LPG Closing Flow
160	160 GPM LPG Closing Flow
260	260 GPM LPG Closing Flow

"X"	3" Valve Liquid Closing Flow Values
175	175 GPM LPG Closing Flow
250	250 GPM LPG Closing Flow
300	300 GPM LPG Closing Flow
375	375 GPM LPG Closing Flow
400	400 GPM LPG Closing Flow
475	475 GPM LPG Closing Flow
500	500 GPM LPG Closing Flow

NOTE: For NH_3 multiply GPM by .90

FEATURES

- Durable ductile body with cadmium surface plating
- All stainless internal component construction
- One piece threaded packing gland
- Precision machined hard coated stem
- Fully retained Nitrile seat disc
- Largest variety of excess flow closing values
- Roller cam actuation
- Industry's fastest bleed time
- Removable data plate
- Industry's easiest valve to service
- Standard construction utilizes Nitrile seals
- Available with Neoprene, Viton®, or Kalrez® seals
- UL LISTED for LPG & NH_3 service
- Rulon™ bearings on stem and stub shafts

Part No. *	Description	Accessories: Bell Housing
ME990-16-"X"	Excelerator™ 2" MNPT x 2" FNPT Internal Valve - Only	MEP889-16
ME990A-16-"X"	Excelerator™ 2" MNPT x 2" FNPT Internal Valve - with Pneumatic Actuator	
ME990AR-16-"X"	Excelerator™ 2" MNPT x 2" FNPT Internal Valve - with Rotary Actuator	
ME990M-16-"X"	Excelerator™ 2" MNPT x 2" FNPT Internal Valve - with Manual Latch	
ME990-24-"X"	Excelerator™ 3" MNPT x 3" FNPT Internal Valve - Only	MEP889-24
ME990A-24-"X"	Excelerator™ 3" MNPT x 3" FNPT Internal Valve - with Pneumatic Actuator	
ME990AR-24-"X"	Excelerator™ 3" MNPT x 3" FNPT Internal Valve - with Rotary Actuator	
ME990M-24-"X"	Excelerator™ 3" MNPT x 3" FNPT Internal Valve - with Manual Latch	

*Note: Indicate desired excess flow closing value when ordering - see chart for value
i.e. ME990-24-250 (250 GPM)
Note: Available in all Stainless Steel Construction
To order Kalrez® add "K" for Kalrez® after the prefix part number i.e. ME990K-16-160
To order Neoprene add "N" for Neoprene after the prefix part number i.e. ME990N-16-160
To order Viton® add "V" for Viton® after the prefix part number i.e. ME990V-16-160

Viton® and Kalrez® are trademarks of DuPont Performance Elastomers.

2" & 3" THREADED TEE BODY

Intended for use on transport trucks and large storage tanks with 2" or 3" threaded connections in directional or bi-directional flow applications. Provides both manual shut-down and excess flow closing in the event of the piping being seperated from the valve. Can be equipped with manual latch, pneumatic or rotary actuator open/ closing devices. All valve models are equipped with a break-away feature in the cast body which permits the piping to shear off in the event of side impact, leaving the valve poppet intact and protecting the tank from catastrophic product loss. The tee body features an additional FNPT side discharge port.
FOR LIQUID OR VAPOR SERVICE APPLICATIONS.

FEATURES

- Durable ductile body with cadmium surface plating
- All stainless internal component construction
- One piece threaded packing gland
- Precision machined hard coated stem
- Fully retained nitrile seat disc
- Largest variety of excess flow closing values
- Roller cam actuation
- Industry's fastest bleed time
- Removable data plate
- Industry's easiest valve to service
- Standard construction utilizes nitrile seals
- Available with Neoprene, Viton®, or Kalrez® seals
- UL LISTED for LPG & NH_3 service
- Rulon™ bearings on stem and stub shafts

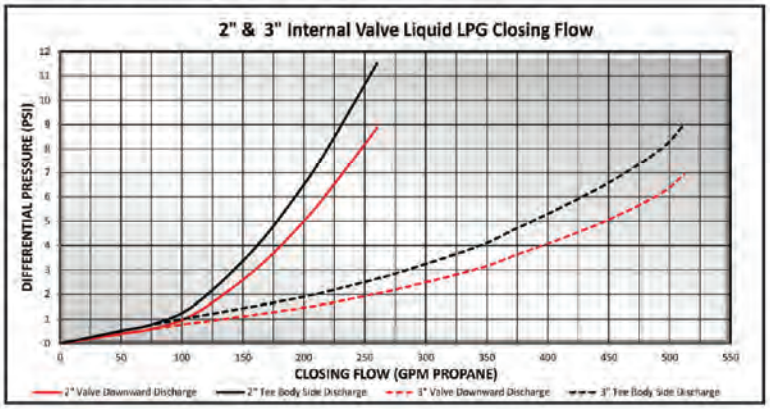

"X"	2" Valve Liquid Closing Flow Values
110	110 GPM LPG Closing Flow
160	160 GPM LPG Closing Flow
260	260 GPM LPG Closing Flow

"X"	3" Valve Liquid Closing Flow Values
175	175 GPM LPG Closing Flow
250	250 GPM LPG Closing Flow
300	300 GPM LPG Closing Flow
375	375 GPM LPG Closing Flow
475	475 GPM LPG Closing Flow
500	500 GPM LPG Closing Flow

NOTE: For NH_3 multiply GPM by .90
Side discharge increases differential to close by approx. 2 PSIG

Part No. *	Description	Accessories Bell Housing
ME992-16-"X"	Excelerator™ 2" MNPT x 2" FNPT Tee Body Internal Valve - Only	MEP889-16
ME992A-16-"X"	Excelerator™ 2" MNPT x 2" FNPT Tee Body Internal Valve - with Pneumatic Actuator	
ME992AR-16-"X"	Excelerator™ 2" MNPT x 2" FNPT Tee Body Internal Valve - with Rotary Actuator	
ME992M-16-"X"	Excelerator™ 2" MNPT x 2" FNPT Tee Body Internal Valve - with Manual Latch	
ME992-24-"X"	Excelerator™ 3" MNPT x 3" FNPT Tee Body Internal Valve - Only	MEP889-24
ME992A-24-"X"	Excelerator™ 3" MNPT x 3" FNPT Tee Body Internal Valve - with Pneumatic Actuator	
ME992AR-24-"X"	Excelerator™ 3" MNPT x 3" FNPT Tee Body Internal Valve - with Rotary Actuator	
ME992M-24-"X"	Excelerator™ 3" MNPT x 3" FNPT Tee Body Internal Valve - with Manual Latch	

* Indicate desired excess flow closing value when ordering - see chart for values - i.e. ME992-24-250 (250 GPM
To order Kalrez® add "K" for Kalrez® after the prefix part number i.e. ME992K-16-160
To order Neoprene add "N" for Neoprene after the prefix part number i.e. ME992N-16-160
To order Viton® add "V" for Viton® after the prefix part number i.e. ME992V-16-160

Viton® and Kalrez® are trademarks of DuPont Performance Elastomers.

2" & 3" MNPT x 300 LB FLANGED

Intended for use on transport trucks and large storage tanks with 2" or 3" threaded connections in directional or bi-directional flow applications. The ME991-16 & ME991-24 Series feature standard 300# outlet flanges for fast reliable piping connections downstream of the tank. Ideally suited for existing tanks with NPT threaded couplings but downstream welded piping is desirable. Provides both manual shut-down and excess flow closing in the event of the piping being separated from the valve. Can be equipped with manual latch, pneumatic or rotary actuator open/ closing devices. All valve models are equipped with a break-away feature in the cast body which permits the piping to shear off in the event of side impact, leaving the valve poppet intact and protecting the tank from catastrophic product loss.
FOR LIQUID OR VAPOR SERVICE APPLICATIONS.

NOTE: See pages 96-98 for flanged deminsions and installation torque values.

ME991-16 SERIES **ME991-24 SERIES**

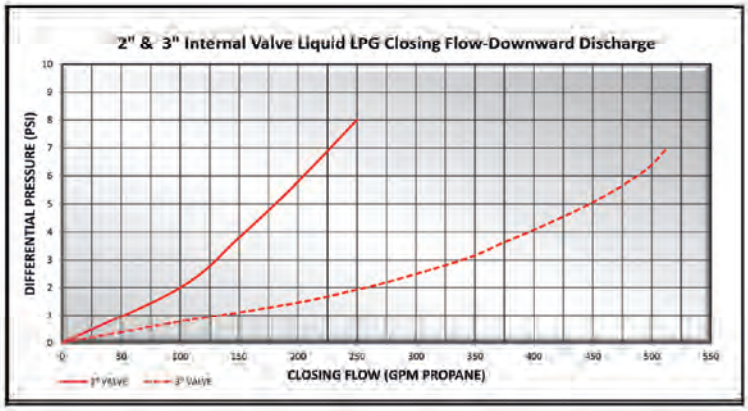

FEATURES

- Durable ductile body with cadmium surface plating
- All stainless internal component construction
- One piece threaded packing gland
- Precision machined hard coated stem
- Fully retained nitrile seat disc
- Largest variety of excess flow closing values
- Roller cam actuation
- Industry's fastest bleed time
- Removable data plate
- Industry's easiest valve to service
- Standard construction utilizes nitrile seals
- Available with Neoprene, Viton®, or Kalrez® seals
- UL LISTED for LPG & NH_3 service
- Rulon™ bearings on stem and stub shafts Rulon™
- Xylan coated corrosion resistant mounting studs & gaskets included

"X"	2" Valve Liquid Closing Flow Values
110	110 GPM LPG Closing Flow
160	160 GPM LPG Closing Flow
260	260 GPM LPG Closing Flow

"X"	3" Valve Liquid Closing Flow Values
175	175 GPM LPG Closing Flow
250	250 GPM LPG Closing Flow
300	300 GPM LPG Closing Flow
375	375 GPM LPG Closing Flow
475	475 GPM LPG Closing Flow
500	500 GPM LPG Closing Flow

NOTE: For NH_3 multiply GPM by .90

Part No. *	Description
ME991-16-"X"	Excelerator™ 2" MNPT x 2"-300# Flange Internal Valve - Only
ME991A-16-"X"	Excelerator™ 2" MNPT x 2"-300# Flange Internal Valve - with Pneumatic Actuator
ME991AR-16-"X"	Excelerator™ 2" MNPT x 2"-300# Flange Internal Valve - with Rotary Actuator
ME991M-16-"X"	Excelerator™ 2" MNPT x 2"-300# Flange Internal Valve - with Manual Latch
ME991-24-"X"	Excelerator™ 3" MNPT x 3"-300# Flange Internal Valve - Only
ME991A-24-"X"	Excelerator™ 3" MNPT x 3"-300# Flange Internal Valve - with Pneumatic Actuator
ME991AR-24-"X"	Excelerator™ 3" MNPT x 3"-300# Flange Internal Valve - with Rotary Actuator
ME991M-24-"X"	Excelerator™ 3" MNPT x 3"-300# Flange Internal Valve - with Manual Latch

* Indicate desired excess flow closing value when ordering - see chart for values - i.e. ME991-24-250 (250 GPM
To order Kalrez® add "K" for Kalrez® after the prefix part number i.e. ME991K-16-160
To order Neoprene add "N" for Neoprene after the prefix part number i.e. ME991N-16-160
To order Viton® add "V" for Viton® after the prefix part number i.e. ME991V-16-160

Viton® and Kalrez® are trademarks of DuPont Performance Elastomers.

Excelerator™ INTERNAL VALVES

Excela-Flange 2"- 300 LB X 2" - 8 BOLT COMPANION FLANGE

The ME994S-2F series valves feature our new modular Excela-Flange™ 2"-8 bolt outlet flange design that can be easily adapted to either 2" NPT or socket weld companion flanges (MEP994S-2F-2SW) making it universal to either piping construction. FOR LIQUID OR VAPOR SERVICE APPLICATIONS.

NOTE: See pages 96-98 for flanged deminsions and installation torque values.

ME994S-2F-16 SERIES

FEATURES

- Durable steel body with cadmium surface plating
- Universal 2"-8 bolt outlet flange connection for threaded or welded piping
- Universal 2" -8 bolt outlet flange provides a built-in union joint for easy servicability
- All stainless internal component construction
- One piece threaded packing gland
- Precision machined hard coated stem & stem guide
- Fully retained nitrile seat disc
- Largest variety of excess flow closing values
- Corrosion resistant sleeved flange bolt holes
- Xylan coated corrosion resistant mounting studs
- Roller cam actuation
- Industry's fastest bleed time
- Removable data plate
- Industry's easiest valve to service
- Standard construction utilizes nitrile seals
- Available with Neoprene, Viton®, or Kalrez® seals
- Available with 316 Stainless Steel bodies
- UL LISTED for LPG & NH_3 service
- Rulon™ bearings on stem and stub shafts
- Fits standard 2" - 300# flanged tank openings

X	2" Valve Liquid Closing Flow Values
110	110 GPM LPG Closing Flow
160	160 GPM LPG Closing Flow
260	260 GPM LPG Closing Flow

NOTE: For NH_3 Multiply GPM by .90

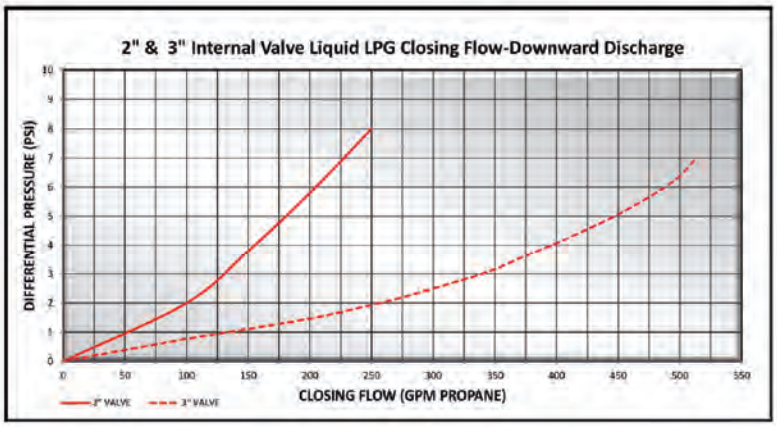

Part No. *	Description	Weight (lbs.)
ME994S-2F-16-"X"	Excelerator™ 2"-300 lb. Modified Single Flange x 2"-8 Bolt Flange Internal Valve - Only	21.6
ME994SA-2F-16-"X"	Excelerator™ 2"-300 lb. Modified Single Flange x 2"-8 Bolt Flange Internal Valve - w/ Pneumatic Actuator	35.5
ME994SAR-2F-16-"X"	Excelerator™ 2"-300 lb. Modified Single Flange x 2"-8 Bolt Flange Internal Valve - w/ Rotary Actuator	28.9

* Indicate desired excess flow closing value when ordering - see chart for values i.e. ME994S-2F-16-260 (260 GPM
To order Kalrez® add "K" for Kalrez® after the prefix part number i.e. ME994SK-2F-16-260
To order Neoprene add "N" for Neoprene after the prefix part number i.e. ME994SN-2F-16-260
To order Viton® add "V" for Viton® after the prefix part number i.e. ME994SV-2F-16-260
Available in Stainless Steel – add "SS" to part number i.e. ME994SS-3F-24-500

MEC Excelerator™ Excela-Flange Companion Flange Kits		
Part No. *	Description	
MEP994-2F-16	2" -8 Bolt x 2" FNPT Excela-Flange Companion Flange Kit w/ Bolts and O-Ring	3.5
MEP994-2F-2SW	2" -8 Bolt x 2" Socket Weld Excela-Flange Companion Flange Kit w/ Bolts and O-Ring	3.6

* Available in Stainless Steel with Stainless Steel Bolts – Add "SS" to part number i.e. MEP994SS-3F-3SW

Viton® and Kalrez® are trademarks of DuPont Performance Elastomers.

2" - 300 LB SINGLE AND DOUBLE FLANGED

Intended for use on bobtail delivery trucks, transport trucks and large storage tanks with 2" flanged connections in directional or bi-directional flow applications. Provides both manual shut-down and excess flow closing in the event of the piping being separated from the valve. Can be equipped with manual latch, pneumatic or rotary actuator open/ closing devices. All valve models are equipped with a break-away feature in the cast body which permits the pump or piping to shear off in the event of side impact, leaving the valve poppet intact and protecting the tank from catastrophic product loss. FOR LIQUID OR VAPOR SERVICE APPLICATIONS.

NOTE: See pages 96-98 for flanged deminsions and installation torque values.

FEATURES

- Durable steel body with cadmium surface plating
- All stainless internal component construction
- One piece threaded packing gland
- Precision machined hard coated stem & stem guide
- Fully retained Nitrile seat disc
- Largest variety of excess flow closing values
- Corrosion resistant sleeved flange bolt holes
- Xylan coated corrosion resistant mounting studs
- Roller cam actuation
- Industry's fastest bleed time
- Removable data plate
- Industry's easiest valve to service
- Standard construction utilizes Nitrile seals
- Available with Neoprene, Viton®, or Kalrez® seals
- Available with 316 Stainless Steel bodies
- UL LISTED for LPG & NH_3 service
- Rulon™ bearings on stem and stub shafts

ME990S-2F-16 SERIES
2"-300LB x 2" FNPT

ME990S-2DFM SERIES
2"-300LB Double
Flanged Internal Valve

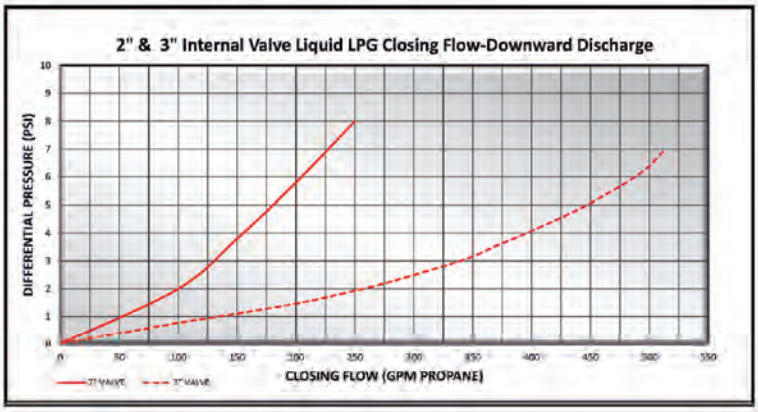

X	2" Valve Liquid Closing Flow Values
110	110 GPM LPG Closing Flow
160	160 GPM LPG Closing Flow
260	260 GPM LPG Closing Flow

NOTE: For NH_3 multiply GPM by .90

Part No. *	Description
ME990S-2F-16-"X"	Excelerator™ 2"-300 lb. Modified Single Flange x 2" FNPT Internal Valve - Only
ME990SA-2F-16-"X"	Excelerator™ 2"-300 lb. Modified Single Flange x 2" FNPT Internal Valve - with Pneumatic Actuator
ME990SAR-2F-16-"X"	Excelerator™ 2"-300 lb. Modified Single Flange x 2" FNPT Internal Valve - with Rotary Actuator
ME990S-2DFM-"X"	Excelerator™ 2"-300 lb. Modified Double Flange Internal Valve - Only
ME990SA-2DFM-"X"	Excelerator™ 2"-300 lb. Modified Double Flange Internal Valve - with Pneumatic Actuator
ME990SAR-2DFM-"X"	Excelerator™ 2"-300 lb. Modified Double Flange Internal Valve - with Rotary Actuator

* Indicate desired excess flow closing value when ordering - see chart for values i.e. ME990S-2F-16-260 (260 GPM
To order Kalrez® add "K" for Kalrez® after the prefix part number i.e. ME990SK-2F-16-260
To order Neoprene add "N" for Neoprene after the prefix part number i.e. ME990SN-2F-16-260
To order Viton® add "V" for Viton® after the prefix part number i.e. ME990SV-2F-16-260

Viton® and Kalrez® are trademarks of DuPont Performance Elastomers.

2" & 3"- 300 LB 3-WAY FLANGED TEE BODY SERIES

Intended for use on bobtail delivery trucks, transport trucks and large storage tanks with 2" & 3" flanged connections in directional or bi-directional flow applications. Provides both manual shut-down and excess flow closing in the event of the piping being separated from the valve. Can be equipped with manual latch, pneumatic or rotary actuator open/ closing devices. All valve models are equipped with a break-away feature in the cast body which permits the pump or piping to shear off in the event of side impact, leaving the valve poppet intact and protecting the tank from catastrophic product loss. The flanged tee body features an additional 300 lb. flanged side discharge port for liquid service applications.

FOR LIQUID OR VAPOR SERVICE APPLICATIONS.

NOTE: See pages 96-98 for flanged deminsions and installation torque values.

FEATURES

- Durable steel body with cadmium surface plating
- All stainless internal component construction
- One piece threaded packing gland
- Precision machined hard coated stem & stem guide
- Fully retained Nitrile seat disc
- Largest variety of excess flow closing values
- Corrosion resistant sleeved flange bolt holes
- Xylan coated corrosion resistant mounting studs
- Roller cam actuation
- Industry's fastest bleed time
- Removable data plate
- Industry's easiest valve to service
- Standard construction utilizes Nitrile seals
- Available with Neoprene, Viton®, or Kalrez® seals
- Available with 316 Stainless Steel bodies
- UL LISTED for LPG & NH_3 service
- Rulon™ bearings on stem and stub shafts

ME993S-16 SERIES

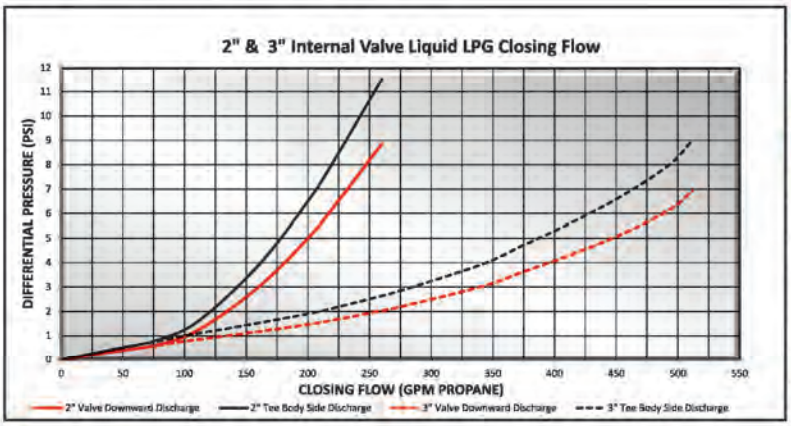

"X"	2" Valve Liquid Closing Flow Values
110	110 GPM LPG Closing Flow
160	160 GPM LPG Closing Flow
260	260 GPM LPG Closing Flow

"X"	3" Valve Liquid Closing Flow Values
175	175 GPM LPG Closing Flow
250	250 GPM LPG Closing Flow
300	300 GPM LPG Closing Flow
375	375 GPM LPG Closing Flow
475	475 GPM LPG Closing Flow
500	500 GPM LPG Closing Flow

NOTE: For NH_3 multiply GPM by .90

Part No. *	Description
ME993S-16-"X"	Excelerator™ 2"-300 lb. Modified Single Flange x (2) 2"-300 lb.Tee Body Internal Valve - Only
ME993SA-16-"X"	Excelerator™ 2"-300 lb. Modified Single Flange x (2) 2"-300 lb.Tee Body Internal Valve - with Pneumatic Actuator
ME993SAR-16-"X"	Excelerator™ 2"-300 lb. Modified Single Flange x (2) 2"-300 lb. Tee Body Internal Valve - with Rotary Actuator
ME993S-24-"X"	Excelerator™ 3"-300 lb. Modified Single Flange x (2) 3"-300 lb. Tee Body Internal Valve - Only
ME993SA-24-"X"	Excelerator™ 3"-300 lb. Modified Single Flange x (2) 3"-300 lb. Tee Body Internal Valve - with Pneumatic Actuator
ME993SAR-24-"X"	Excelerator™ 3"-300 lb. Modified Single Flange x (2) 3"-300 lb. Tee Body Internal Valve - with Rotary Actuator

* Indicate desired excess flow closing value when ordering - see chart for values i.e. ME993S-24-250 (250 GPM
To order Kalrez® add "K" for Kalrez® after the prefix part number i.e. ME993SK-24-250
To order Neoprene add "N" for Neoprene after the prefix part number i.e. ME993SN-24-250
To order Viton® add "V" for Viton® after the prefix part number i.e. ME993SV-24-250

Viton® and Kalrez® are trademarks of DuPont Performance Elastomers.

Excela-Flange™ 3"- 300 LB X 3" - 8 BOLT UNIVERSAL COMPANION FLANGE SERIES

The ME994S-3F series valves feature our new modular Excela-Flange 3"-8 bolt outlet flange design that can be easily adapted to either 3" NPT or socket weld companion flanges (MEP994S-3F-3SW) making it universal to either piping construction.

FOR LIQUID OR VAPOR SERVICE APPLICATIONS.

NOTE: See pages 96-98 for flanged deminsions and installation torque values.

ME994S-3F-24 SERIES

FEATURES

- Durable steel body with cadmium surface plating
- Universal 3"-8 bolt outlet flange connection for threaded or welded piping
- Universal 3"-8 bolt outlet flange provides a built-in union joint for easy servicability
- All stainless internal component construction
- One piece threaded packing gland
- Precision machined hard coated stem & stem guide
- Fully retained nitrile seat disc
- Largest variety of excess flow closing values
- Corrosion resistant sleeved flange bolt holes
- Xylan coated corrosion resistant mounting studs
- Roller cam actuation
- Industry's fastest bleed time
- Removable data plate
- Industry's easiest valve to service
- Standard construction utilizes nitrile seals
- Available with Neoprene, Viton®, or Kalrez® seals
- Available with 316 Stainless Steel bodies
- UL LISTED for LPG & NH_3 service
- Rulon™ bearings on stem and stub shafts
- Fits standard 3" - 300# flanged tank openings

X	3" Valve Liquid Closing Flow Values
175	175 GPM LPG Closing Flow
250	250 GPM LPG Closing Flow
300	300 GPM LPG Closing Flow
375	375 GPM LPG Closing Flow
400	400 GPM LPG Closing Flow
475	475 GPM LPG Closing Flow
500	500 GPM LPG Closing Flow

NOTE: For NH_3 multiply GPM by .90

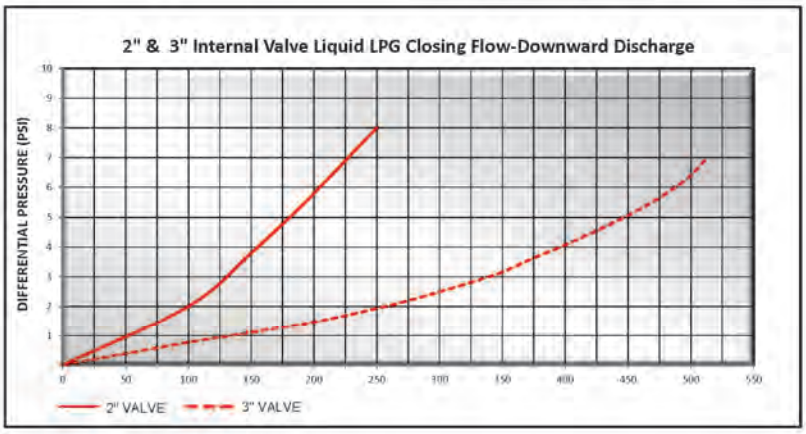

Part No.*		Weight (lbs.)
ME994S-3F-24-"X"	**Excelerator**™ 3"-300 lb. Modified Single Flange x 3"-8 Bolt Companion Flange Internal Valve - Only	38.3
ME994SA-3F-24-"X"	**Excelerator**™ 3"-300 lb. Modified Single Flange x 3"-8 Bolt Companion Flange Internal Valve - w/ Pneumatic Actuator	52.8
ME994SAR-3F-24-"X"	**Excelerator**™ 3"-300 lb. Modified Single Flange x 3"-8 Bolt Companion Flange Internal Valve - w/ Rotary Actuator	45.9

* Indicate desired excess flow closing value when ordering - see chart for values i.e. ME994S-3F-24-260 (260 GPM
To order Kalrez® add "K" for Kalrez® after the prefix part number i.e. ME994SK-3F-24-260
To order Neoprene add "N" for Neoprene after the prefix part number i.e. ME994SN-3F-24-260
To order Viton® add "V" for Viton® after the prefix part number i.e. ME994SV-3F-24-260
To order Stainless Steel add "SS" to part number i.e. ME994SS-3F-24-500

MEC **Excelerator**™ Excela-Flange Companion Flange Kits

Part No. *	Description	Weight (lbs.)
MEP994-3F-24	3" -8 Bolt x 3" FNPT Excela-Flange Companion Flange Kit w/ Bolts and O-Ring	4.8
MEP994-3F-3SW	3" -8 Bolt x 3" Socket Weld Excela-Flange Companion Flange Kit w/ Bolts and O-Ring	4.9

* Available in Stainless Steel with Stainless Steel Bolts – Add "SS" to part number i.e. MEP994SS-3F-3SW

Viton® and Kalrez® are trademarks of DuPont Performance Elastomers.

2" & 3"- FLANGED TEE BODIES

Intended for use on bobtail delivery trucks, transport trucks and large storage tanks with 2" & 3" flanged connections in directional or bi-directional flow applications. Provides both manual shut-down and excess flow closing in the event of the piping being separated from the valve. Can be equipped with manual latch, pneumatic or rotary actuat or open/ closing devices. All valve models are equipped with a break-away feature in the cast body which permits the pump or piping to shear off in the event of side impact, leaving the valve poppet intact and protecting the tank from catastrophic product loss. The tee body features an additional FNPT side discharge port for liquid service applications. FOR LIQUID OR VAPOR SERVICE APPLICATIONS.

NOTE: See pages 96-98 for flanged deminsions and installation torque values.

FEATURES

- Durable steel body with cadmium surface plating
- All stainless internal component construction
- One piece threaded packing gland
- Precision machined hard coated stem & stem guide
- Fully retained Nitrile seat disc
- Largest variety of excess flow closing values
- Corrosion resistant sleeved flange bolt holes
- Xylan coated corrosion resistant mounting studs
- Roller cam actuation
- Industry's fastest bleed time
- Removable data plate
- Industry's easiest valve to service
- Standard construction utilizes Nitrile seals
- Available with Neoprene, Viton®, or Kalrez® seals
- Available with 316 Stainless Steel bodies LISTED for LPG & NH_3 service
- Rulon™ bearings on stem and stub shafts

ME992S-2F-16 SERIES

ME992S-3F-24 SERIES

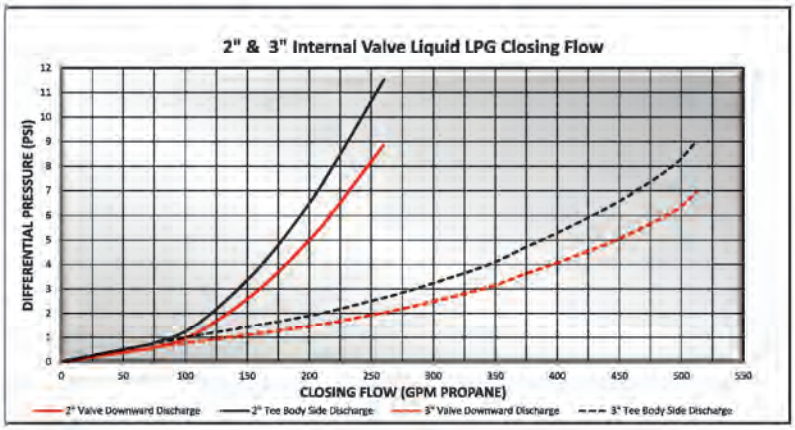

"X"	2" Valve Liquid Closing Flow Values
110	110 GPM LPG Closing Flow
160	160 GPM LPG Closing Flow
260	260 GPM LPG Closing Flow

"X"	3" Valve Liquid Closing Flow Values
175	175 GPM LPG Closing Flow
250	250 GPM LPG Closing Flow
300	300 GPM LPG Closing Flow
375	375 GPM LPG Closing Flow
475	475 GPM LPG Closing Flow
500	500 GPM LPG Closing Flow

NOTE: For NH_3 multiply GPM by .90

Part No. *	Description
ME992S-2F-16-"X"	Excelerator™ 2"-300 lb. Modified Single Flange x 2" FNPT Tee Body Internal Valve - Only
ME992SA-2F-16-"X"	Excelerator™ 2"-300 lb. Modified Single Flange x 2" FNPT Tee Body Internal Valve - with Pneumatic Actuator
ME992SAR-2F-16-"X"	Excelerator™ 2"-300 lb. Modified Single Flange x 2" FNPT Tee Body Internal Valve - with Rotary Actuator
ME992S-3F-24-"X"	Excelerator™ 3"-300 lb. Modified Single Flange x 3" FNPT Tee Body Internal Valve - Only
ME992SA-3F-24-"X"	Excelerator™ 3"-300 lb. Modified Single Flange x 3" FNPT Tee Body Internal Valve - with Pneumatic Actuator
ME992SAR-3F-24-"X"	Excelerator™ 3"-300 lb. Modified Single Flange x 3" FNPT Tee Body Internal Valve - with Rotary Actuator

* Indicate desired excess flow closing value when ordering - see chart for values i.e. ME992S-3F-24-250 (250 GPM
To order Kalrez® add "K" for Kalrez® after the prefix part number i.e. ME992SK-3F-24-250
To order Neoprene add "N" for Neoprene after the prefix part number i.e. ME992SN-3F-24-250
To order Viton® add "V" for Viton® after the prefix part number i.e. ME992SV-3F-24-250

Viton® and Kalrez® are trademarks of DuPont Performance Elastomers.

3"- FLANGED INTERNAL VALVES

Intended for use on bobtail delivery trucks, transport trucks and large storage tanks with 3" flanged connections in directional or bi-directional flow applications. Provides both manual shut-down and excess flow closing in the event of the piping being separated from the valve. Can be equipped with manual latch, pneumatic or rotary actuat or open/ closing devices. All valve models are equipped with a break-away feature in the cast body which permits the pump or piping to shear off in the event of side impact, leaving the valve poppet intact and protecting the tank from catastrophic product loss. FOR LIQUID OR VAPOR SERVICE APPLICATIONS.

NOTE: See pages 96-98 for flanged deminsions and installation torque values.

ME990S-3F-24
Modified Single Flange Series

ME990S-3DF
Standard Double Flange Series

ME990S-3DFM
Modified Double Flange Series

FEATURES

- Durable steel body with cadmium surface plating
- All stainless internal component construction
- One piece threaded packing gland
- Precision machined hard coated stem & stem guide
- Fully retained Nitrile seat disc
- Largest variety of excess flow closing values
- Corrosion resistant sleeved flange bolt holes
- Xylan coated corrosion resistant mounting studs
- Roller cam actuation
- Industry's fastest bleed time
- Removable data plate
- Industry's easiest valve to service
- Standard construction utilizes Nitrile seals
- Available with Neoprene, Viton®, or Kalrez® seals
- Available with 316 Stainless Steel bodies
- UL LISTED for LPG & NH_3 service
- Rulon™ bearings on stem and stub shafts

"X"	3" Valve Liquid Closing Flow Values
175	175 GPM LPG Closing Flow
250	250 GPM LPG Closing Flow
300	300 GPM LPG Closing Flow
375	375 GPM LPG Closing Flow
400	400 GPM LPG Closing Flow
475	475 GPM LPG Closing Flow
500	500 GPM LPG Closing Flow

NOTE: For NH_3 multiply GPM by .90 PM by .90

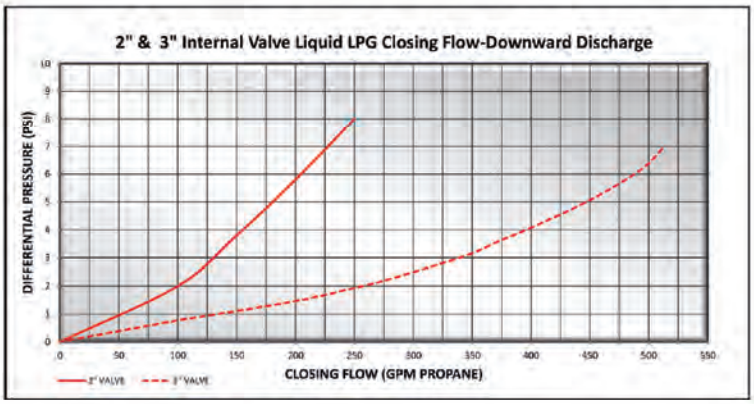

MEC Excelerator™ 3" Flanged Internal Valves	
Part No. *	**Description**
ME990S-3DF-"X"	Excelerator™ 3" Double Flange Bobtail Internal Valve - Only
ME990SA-3DF-"X"	Excelerator™ 3" Double Flange Bobtail Internal Valve - with Pneumatic Actuator
ME990SAR-3DF-"X"	Excelerator™ 3" Double Flange Bobtail Internal Valve - with Rotary Actuator
ME990S-3DFM-"X"	Excelerator™ 3"-300 lb. Modified Double Flange Internal Valve - Only
ME990SA-3DFM-"X"	Excelerator™ 3"-300 lb. Modified Double Flange Internal Valve - with Pneumatic Actuator
ME990SAR-3DFM-"X"	Excelerator™ 3"-300 lb. Modified Double Flange Internal Valve - with Rotary Actuator
ME990S-3F-24-"X"	Excelerator™ 3"-300 lb. Modified Single Flange x 3" FNPT Internal Valve - Only
ME990SA-3F-24-"X"	Excelerator™ 3"-300 lb. Modified Single Flange x 3" FNPT Internal Valve - with Pneumatic Actuator
ME990SAR-3F-24-"X"	Excelerator™ 3"-300 lb. Modified Single Flange x 3" FNPT Internal Valve - with Rotary Actuator

* Indicate desired excess flow closing value when ordering - see chart for values i.e. ME990S-3DF-250 (250 GPM
To order Kalrez® add "K" for Kalrez® after the prefix part number i.e. ME990SK-3DF-300
To order Neoprene add "N" for Neoprene after the prefix part number i.e. ME990SN-3DF-300
To order Viton® add "V" for Viton® after the prefix part number i.e. ME990SV-3DF-300

Excelerator™ INTERNAL VALVES

3"-300 LB SINGLE FLANGED

Intended for use on transport trucks, bobtail trucks and large storage tanks with 3" flanged connections in directional or bi-directional flow applications. Provides both manual shut-down as well as excess flow closing in the event of the piping being seperated from the valve. Can be equipped with a pneumatic actuator open/closing device. FOR LIQUID OR VAPOR SERVICE APPLICATIONS.

NOTE: See pages 96-98 for flanged deminsions and installation torque values.

ME990-3F SERIES

FEATURES

- All stainless construction
- Precision machined stem & stem guide
- Fully retained seat disc
- Largest variety of excess flow closing values
- Corrosion resistant sleeved flange bolt holes
- Xylan coated corrosion resistant mounting studs
- Removable data plate
- Threaded packing gland with seal ejector spring
- Standard construction utilizes nitrile seals
- Available with Neoprene, Viton®, or Kalrez® seals
- UL LISTED for LPG & NH_3 service
- Rulon™ bearings on stem and stub shafts

"X"	3" Valve Liquid Closing Flow Values
175	175 GPM LPG Closing Flow
250	250 GPM LPG Closing Flow
300	300 GPM LPG Closing Flow
375	375 GPM LPG Closing Flow
400	400 GPM LPG Closing Flow
475	475 GPM LPG Closing Flow
500	500 GPM LPG Closing Flow

NOTE: For NH3 Multiply GPM by .90

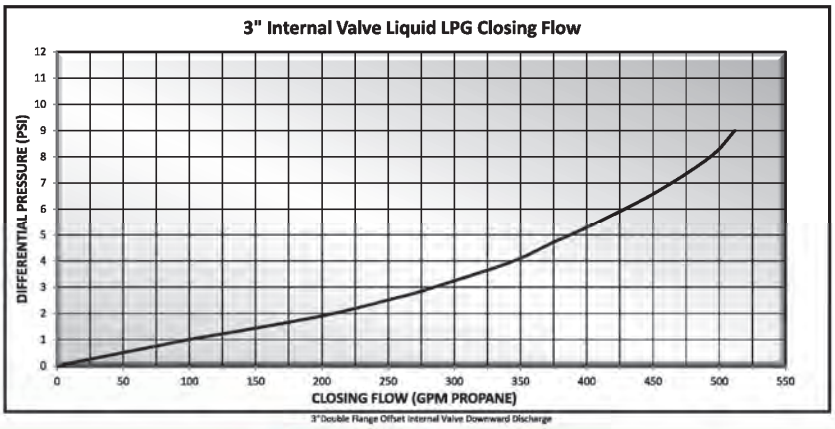

MEC Excelerator™ 3" Internal Valves	
Part No. *	**Description**
ME990-3F-"X"	**Excelerator™** 3" Single Flange Internal Valve - Only
ME990A-3F-"X"	**Excelerator™** 3" Single Flange Internal Valve - with Pneumatic Actuator

* Indicate desired excess flow closing value when ordering - see chart for value
i.e. ME990-3F-500 (500 GPM)
To order Kalrez® add "K" for Kalrez® after the prefix part number i.e. ME990K-3F-500
To order Neoprene add "N" for Neoprene after the prefix part number i.e. ME990N-3F-500
To order Viton® add "V" for Viton® after the prefix part number i.e. ME990V-3F-500

Viton® and Kalrez® are trademarks of DuPont Performance Elastomers.

Next Generation 3" - 300 LB DOUBLE FLANGED **OFF-SET** INTERNAL VALVES

Intended for use on bobtail delivery trucks with 3" flanged connections in directional or bi-directional flow applications. The 3" offset outlet flange prevents pump installation interference with truck frame rails, cross members, PTO covers, drive shafts, and other common obstacles when remounting bobtail vessels onto new chassis. In order to reduce the amount of offset from the 2" maximum to 1-1/4", simply rotate the inlet flange connection by 1 bolt hole either direction. To eliminate the offset entirely, simply rotate 1 more bolt hole. The Excelerator™ offset is equipped with three separate packing gland locations to prevent interference while mounting the valve actuator no matter how you choose to mount the valve. Provides both manual shut-down and excess flow closing in the event the of the valve being separated from the tank. Can be equipped with pneumatic or rotary actuator open/closing devices. All valve models are equipped with a break-away feature in the cast body which permits the pump or piping to shear off in the event of side impact, leaving the valve poppet intact and protecting the tank from catastrophic product loss.

NOTE: See pages 96-98 for flanged deminsions and installation torque values.

ME990S-3DFO SERIES

PATENT PENDING

FEATURES

- Rotate valve body in either direction 1 bolt hole to reduce offset to 1-1/4"
- Standard with 3 gland ports for stem relocation (2 plugged)
- Each gland port can accept pneumatic or rotary type actuators
- Durable steel body with cadmium surface plating
- All stainless internal component construction
- One piece threaded packing gland
- Precision machined hard coated stem & stem guide
- Fully retained nitrile seat disc
- Largest variety of excess flow closing values
- Corrosion resistant sleeved flange bolt holes
- Xylan coated corrosion resistant mounting studs
- Roller cam actuation
- Industry's fastest bleed time
- Removable data plate
- Industry's easiest valve to service
- Standard construction utilizes nitrile seals
- Available with Neoprene, Viton®, or Kalrez® seals
- Available with 316 Stainless Steel bodies
- UL LISTED for LPG & NH_3 service
- Rulon™ bearings on stem and stub shafts

Alternate Gland Ports (Plugged)

"X"	3" Valve Liquid Closing Flow Values
175	175 GPM LPG Closing Flow
250	250 GPM LPG Closing Flow
300	300 GPM LPG Closing Flow
375	375 GPM LPG Closing Flow
400	400 GPM LPG Closing Flow
475	475 GPM LPG Closing Flow
500	500 GPM LPG Closing Flow

NOTE: For NH_3 Multiply GPM by .90

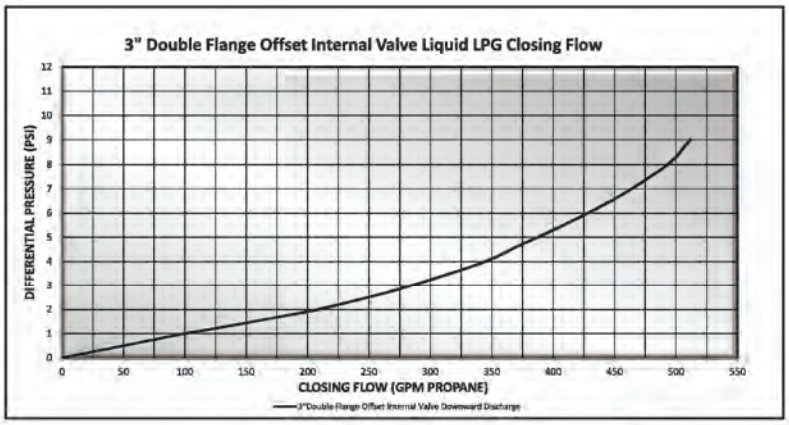

Part No. *	Description
ME990S-3DFO-"X"	**Excelerator™** 3" Double Flange Offset Bobtail Internal Valve - Only
ME990SA-3DFO-"X"	**Excelerator™** 3" Double Flange Offset Bobtail Internal Valve - with Pneumatic Actuator
ME990SAR-3DFO-"X"	**Excelerator™** 3" Double Flange Offset Bobtail Internal Valve - with Rotary Actuator

* Indicate desired excess flow closing value when ordering - see chart for values i.e. ME990S-3DFO-250 (250 GPM)
Available in all Stainless Steel Construction - i.e. ME990SS-3DFO-250
To order Kalrez® add "K" for Kalrez® after the prefix part number i.e. ME990SK-3DFO-300
To order Neoprene add "N" for Neoprene after the prefix part number i.e. ME990SN-3DFO-300
To order Viton® add "V" for Viton® after the prefix part number i.e. ME990SV-3DFO-300

Viton® and Kalrez® are trademarks of DuPont Performance Elastomers.

Excelerator™ INTERNAL VALVES

4" - 300 LB FLANGED

Intended for use on transport trucks and large storage tanks with 4" flanged connections in directional or bi-directional flow applications. Provides both manual shut-down as well as excess flow closing in the event of the piping being separated from the valve. Can be equipped with manual latch, pneumatic or rotary actuator open/ closing devices.

NOTE: See pages 96-98 for flanged deminsions and installation torque values.

FEATURES

- All stainless construction
- Precision machined stem & stem guide
- Fully retained disc
- Largest variety of excess flow closing values
- Available with standard or #5 mesh filter screen
- Corrosion resistant sleeved flange bolt holes
- Xylan coated corrosion resistant mounting studs
- Removable data plate
- Threaded packing gland with seal ejector spring
- Standard construction utilizes Nitrile seals
- Available with Neoprene, Viton®, or Kalrez® seals
- UL LISTED for LPG & NH_3 service
- Rulon™ bearings on stem and stub shafts

ME990-4F SERIES

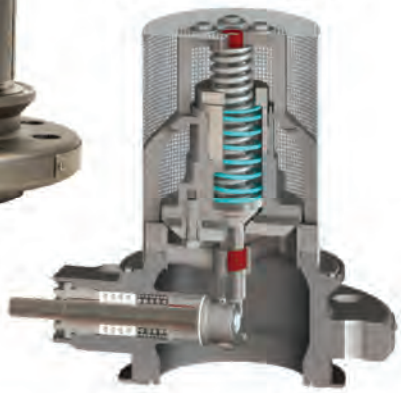

U.S. PATENT #9,476,518

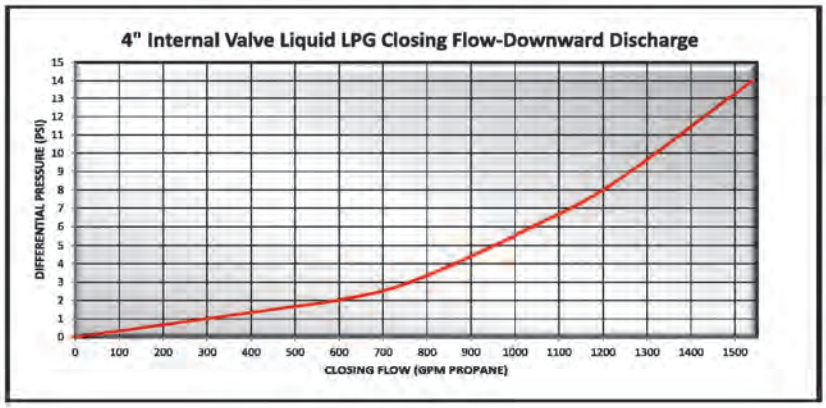

"X"	4" Valve Liquid Closing Flow Values
375	375 GPM LPG Closing Flow
500	500 GPM LPG Closing Flow
650	650 GPM LPG Closing Flow
850	850 GPM LPG Closing Flow
1250	1,250 GPM LPG Closing Flow
1500	1,500 GPM LPG Closing Flow

NOTE: For NH3 Multiply GPM by .90

Part No.*	Description
ME990-4F-"X"	Excelerator™ 4" Single Flange Internal Valve - Only
ME990A-4F-"X"	Excelerator™ 4" Single Flange Internal Valve - with Pneumatic Actuator
ME990AR-4F-"X"	Excelerator™ 4" Single Flange Internal Valve - with Rotary Actuator
ME990M-4F-"X"	Excelerator™ 4" Single Flange Internal Valve - with Manual Latch

* Indicate desired excess flow closing value when ordering - se chart for values - i.e. ME990-4F-650 (650 GPM)
For #5 Mesh screen add /5 - e.i. ME990-4F-650/5
To order Kalrez® add "K" for Kalrez® after the prefix part number - i.e. ME990K-4F-500
To order Neoprene add "N" for Neoprene after the prefix part number - i.e. ME990N-4F-500
To order Viton® add "V" for Viton® after the prefix part number - i.e. ME990V-4F-500

Viton® and Kalrez® are trademarks of DuPont Performance Elastomers.

4"-300 LB. & 6" -300 LB DOUBLE FLANGED INTERNAL VALVES

Intended for use on transport trucks and large storage tanks with 4" or 6" flanged connections in directional or bi-directional flow applications. Provides both manual shut-down and excess flow closing in the event of the piping being seperated from the valve. Equipped standard with a rotary actuator open/closing devices. All valve models are equipped with a break-away feature in the cast body which permits the pump or piping to shear off in the event of side impact, leaving the valve poppet intact and protecting the tank from catastrophic product loss.

NOTE: See pages 96-98 for flanged deminsions and installation torque values.

FEATURES

- Durable steel body with cadmium surface plating
- All stainless internal component construction
- One piece threaded packing gland
- Precision machined hard coated stem & stem guide
- Fully retained nitrile seat disc
- Largest variety of excess flow closing values
- Corrosion resistant sleeved flange bolt holes
- Xylan coated corrosion resistant mounting studs
- Roller cam actuation
- Industry's fastest bleed time
- Removable data plate
- Industry's easiest valve to service
- Standard construction utilizes nitrile seals
- Available with Viton® or Kalrez® seals
- Available with 316 Stainless Steel bodies
- UL LISTED for LPG & NH_3 service
- Rulon™ bearings on stem and stub shafts
- Fits standard 300# flange openings

ME990SAR-4DFM
4"-300LB Modified Double Flange Series

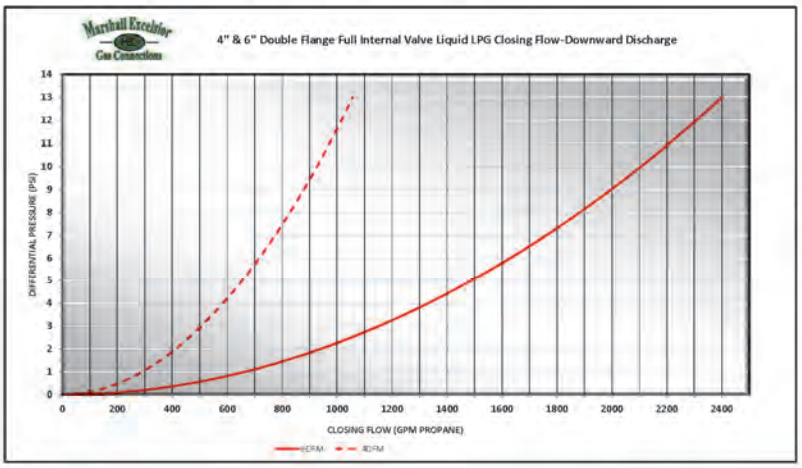

"X"	4" Valve Liquid Closing Flow Values
375	375 GPM LPG Closing Flow
500	500 GPM LPG Closing Flow
650	650 GPM LPG Closing Flow
800	800 GPM LPG Closing Flow
900	900 GPM LPG Closing Flow
1000	1000 GPM LPG Closing Flow

"X"	6" Valve Liquid Closing Flow Values
650	650 GPM LPG Closing Flow
1000	1000 GPM LPG Closing Flow
1250	1250 GPM LPG Closing Flow
1500	1500 GPM LPG Closing Flow
1800	1800 GPM LPG Closing Flow
2400	2400 GPM LPG Closing Flow

NOTE: For NH_3 Multiply GPM by .90

MEC Excelerator™ 4" & 6" Flanged Internal Valves	
Part No.*	Description
ME990SAR-4DFM-"X"	**Excelerator**™ 4"-300 lb. Modified Double Flange Internal Valve - with Rotary Actuator
ME990SAR-6DFM-"X"	**Excelerator**™ 6"-300 lb. Modified Double Flange Internal Valve - with Rotary Actuator

* Note: Indicate desired excess flow closing value when ordering - see chart for values - i.e. ME990SAR-4DFM-375 (375 GPM
Available in all Stainless Steel Construction - i.e. ME990SSAR-4DFM-375
To order Kalrez® add "K" for Kalrez® after the prefix part number i.e. ME990SKAR-4DFM--375
To order Viton® add "V" for Viton® after the prefix part number i.e. ME990SVAR-4DFM-375

Viton® and Kalrez® are trademarks of DuPont Performance Elastomers.

BOBTAIL DELIVERY TRUCKS

Excela-Flange Application Guide

Innovation Made Simple

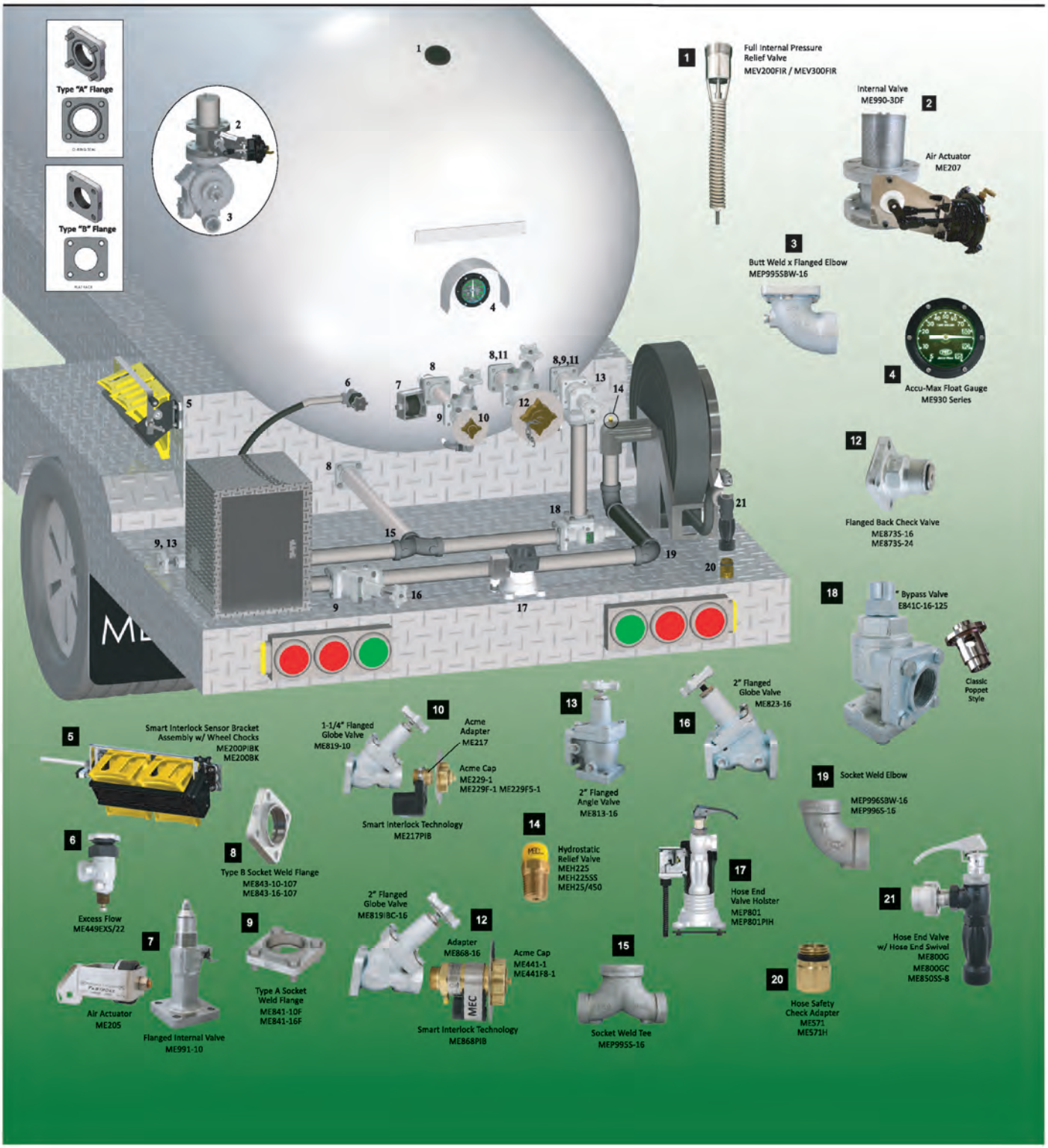

COVINGTON, GA (800) 241-5652
APOPKA, FL (800) 432-1869
GOLDSBORO, NC (800) 426-9293

Rutherford EQUIPMENT • QUALITY GAS PRODUCTS

Excelerator™ INTERNAL VALVES

TANK FLANGE CONNECTIONS

ME990-2F-16, ME992-2F-16, ME993-16, ME994-2F-16 AND ME990-2DFM SERIES 2" FLANGED INTERNAL VALVES

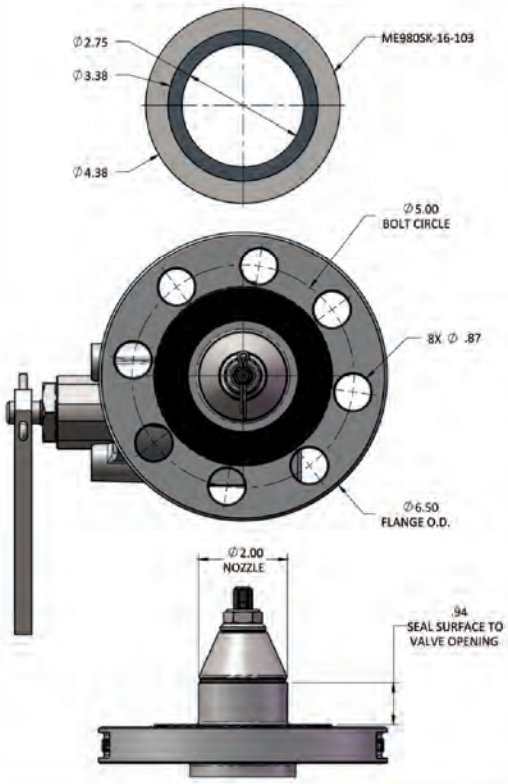

ME990-3F-24, ME992-3F-24, ME993-24 AND ME994-3F-24 SERIE S 3" FLANGED INTERNAL VALVE S

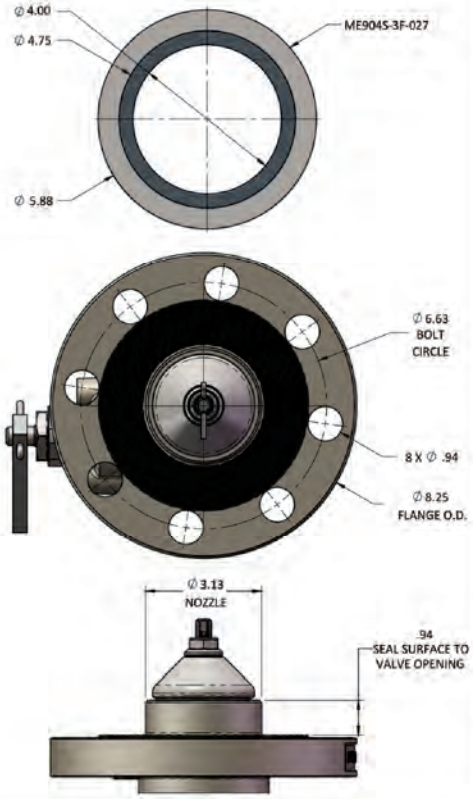

ME990-3DFM SERIES 3" FLANGED INTERNAL VALVES

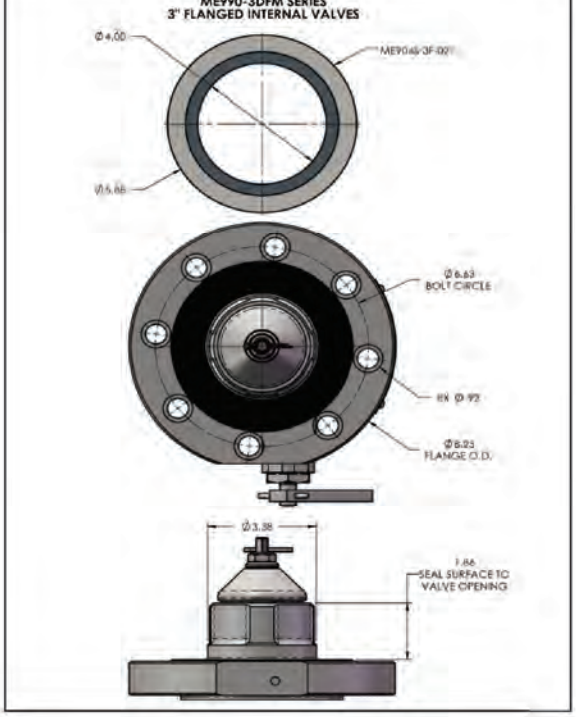

ME990-3F SERIES 3" SINGLE-FLANGED INTERNAL VALVES

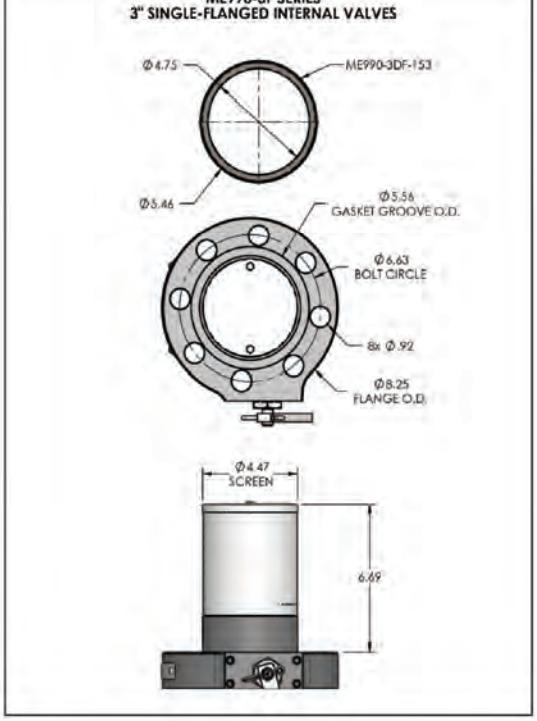

TANK FLANGE CONNECTIONS

ME990-3DF AND ME990-3DFO SERIES
3" DOUBLE FLANGED INTERNAL VALVES

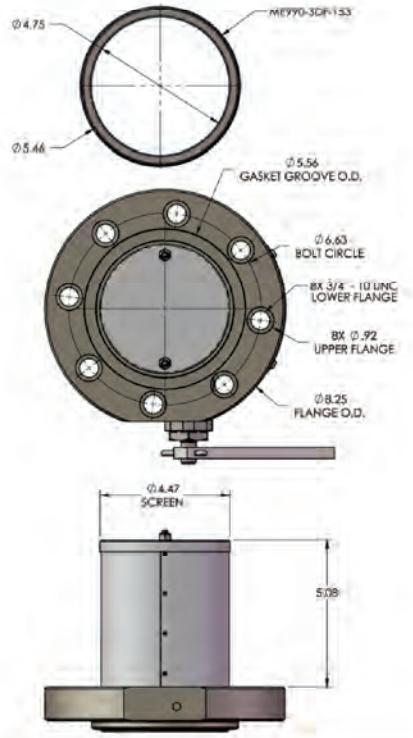

ME990-4F SERIES
4" SINGLE-FLANGED INTERNAL VALVES

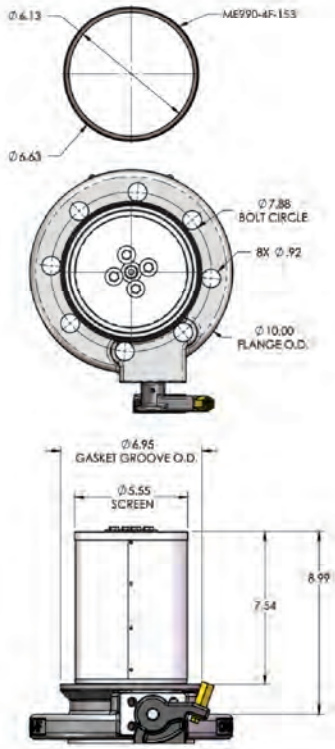

ME990-4DFM SERIES
4" FLANGED INTERNAL VALVES

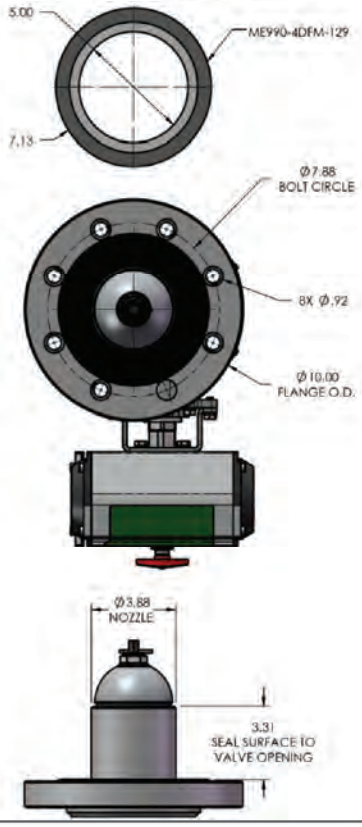

ME990-6DFM SERIES
6" FLANGED INTERNAL VALVES

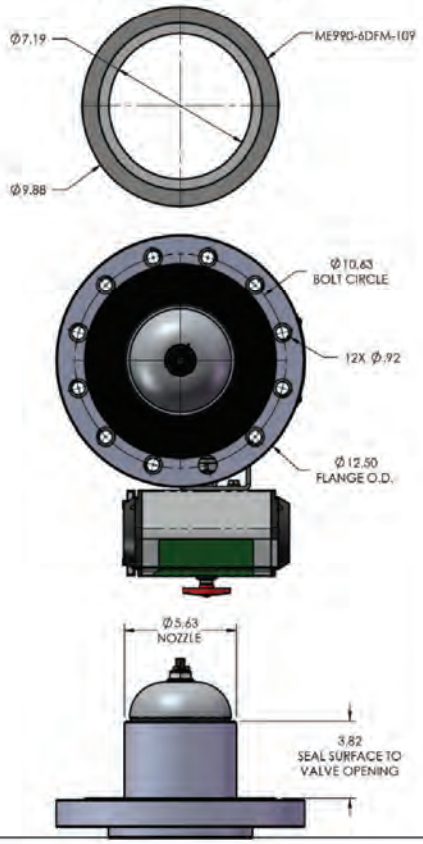

Excela-Flange™ BOLT TORQUE REFERENCE

ANSI / ASME Class 300 Flanges

Nominal Pipe Size		2"	3"	4"	6"
Tightening Sequence			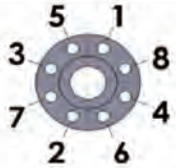	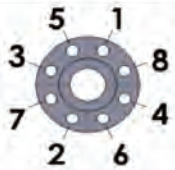	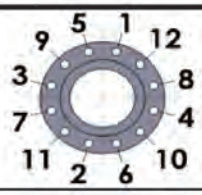
Bolt / Stud	Size (Inch)	Ø 5/8	Ø 3/4	Ø 3/4	Ø 3/4
	Thread	5/8-11 UNC	3/4-10 UNC	3/4-10 UNC	3/4-10 UNC
	Min. Grade	B7	B7	B7	B7
Torque [1, 2, 3] (Ft-Lb)	Lubricated	**110**	**200**	**200**	**200**
	Dry	**150**	**250**	**250**	**250**
Wrench Size (Inch)	Standard	15/16	1-1/8	1-1/8	1-1/8
	Heavy	1-1/16	1-1/4	1-1/4	1-1/4

MEC Excela-Flanges

Flange Type		4-Bolt Square Type A / B	4-Bolt Square Type C	8-Bolt Round Companion	8-Bolt Round Companion
Size (Inch)		1-1/4, 1-1/2 & 2	1-1/4, 1-1/2 & 2	2"	3"
Tightening Sequence					
Bolt / Stud	Size (Inch)	Ø 1/2	Ø 3/8	Ø 1/2	Ø 1/2
	Thread	1/2-13 UNC	3/8-16 UNC	1/2-13 UNC	1/2-13 UNC
	Min. Grade	8	8	8	8
Torque [1, 2, 3] (Ft-Lb)	Lubricated	**75**	**30**	**75**	**75**
	Dry	**100**	**40**	**100**	**100**
Wrench Size	(Inch)	3/4	9/16	3/4	3/4

[1] Threaded flange material and thread engagement with stud must be capable of achieving final torque
[2] The torque wrench used should have a minimum accuracy of 5% of full scale or 10% of indicated value
[3] Xylan coated studs and bolts should be installed to the "Lubricated" torque spec. due to it's low friction

Recommended Flange Installation Procedure

1. Check flanges, gasket, bolts / studs and nuts for proper material and defects
2. Apply a high quality lubricant or anti-seize on bolt / stud threads and nut contact surfaces
3. Torque bolts in sequence according to the following increments:
   a.) Snug / hand-tight checking for even gap between flanges
   b.) 30% of final torque
   c.) 60% of final torque
   d.) 100% of final torque
4. Check for leaks at maximum working pressure before putting connection into service
5. Re-tighten after 24 hours (due to gasket / bolt relaxation)
6. Consider providing additional corrosion protection, such as paint or protective coating, as necessary

INTERNAL VALVE ACTUATORS

PowerTorq SERIES

These direct drive actuators are designed to maximize the life of the internal valve by eliminating side pressure on the valve's packing stem. These actuators are intended to be used at remote locations or operated directly off the air brake system in bobtail or transport applications.

The low temperature factory installed seals allow these actuators to be used with air, nitrogen, carbon dioxide or LP-Gas vapor. In case of a fire the factory provided thermal plug melts at 212° Fahrenheit releasing pressure allowing the internal valve to close. The factory set rotation of these actuators require no modification, can be oriented in any direction and all hardware needed for installation is provided.

FEATURES

- Stainless steel all weather mounting hardware
- Field repairable under full tank pressure
- Anodized aluminum actuator body with easy to see open/close indicator
- No pinch points for operator safety
- Includes mounting bracket for ME707 Quick Release Valve
  Note: ME707 is not required for operation

ME225

ME707 & Internal valves not included

Actuator Operating Pressure Limits:
Minimum = 25 PSIG
Maximum = 125 PSIG
Recommended = 40-60 PSIG

PowerTorq Actuators

ME227

Part No.	Actuator Type	Fits MEC*	Fits Fisher*	Internal Valve
ME225	Direct Drive	ME990-10, ME991-10, ME992-10, ME992-12	Fisher® C407	1-1/4" Threaded
ME226	Direct Drive	ME990-16, ME990-24, ME992-24, ME990S-3F-24, ME990S-2DFM, ME991-16, ME991-24, ME992-16, ME992-24, ME993S-16, ME993S-24, ME994S	Fisher® C402, C421, C427, C471, C477	2" & 3" Threaded
ME227	Direct Drive	ME990S-3DF & ME990S-3DFM	Fisher® C403-24 & C483-24 Series	3" Double Flange
ME228	Direct Drive	ME990-4F	Fisher® C404-32 & C484-32 Series	4" Single Flange
* Also fits Cavagna 6902900 Series internal valves				

Fisher® and Fisher® Internal Valves are the trademarks of Emerson Process Management;
Cavagna is the trademark of Cavagna Group

ACTUATOR ACCESSORIES

ME707 - The quick release valve is used in conjunction with Marshall Excelsior's air actuators to decrease the response time when closing actuators. They are particularly effective when long distances (75 feet or more) exist between the actuator and the actuator control valve.

ME708 - The 0-150 psig air pressure regulator prolongs the life of the air actuator and air system by allowing the air pressure to be set and regulated at the minimum required operating pressure for each individual system.

ME709 - The gas/air filter is used to filter foreign materials and/or particles from LP-Gas systems such as motor fuel/carburetion systems. Also designed to be used to filter air supply lines for internal and emergency shutoff valve actuator systems.

MEGR-130-50 - Pressure reducing regulator - Maximum 250 inlet, 50 PSI outlet set point

Part No.	Inlet	Outlet
ME707	3/8" FNPT	3/8" FNPT (2 Ports)
ME708	1/4" FNPT	1/4" FNPT
ME709	1/4" FNPT	1/4" MNPT
MEGR-130-50	1/4" FNPT	1/4" FNPT

ME707

ME709

ME708
Universal Mounting Bracket Included

ME130-50

INTERNAL VALVE ACTUATORS

POWERSTROKE AND FASTROKE SERIES

Designed with a heavy duty stainless steel frame to withstand the toughest conditions. These actuators are intended to be used at remote locations or operated directly off the air brake system in bobtail or transport applications.

The actuator's smooth acting cam opens the internal valve lever when air, nitrogen, or carbon dioxide is applied to the line. When pressure to the line is released, the internal valve automatically closes. In case of a fire the factory provided thermal plug melts at 212° Fahrenheit releasing pressure allowing the internal valve to close. These actuators require no modification and all hardware needed for installation is provided.

Part No.	Actuator Type	Fits MEC*	Fits*	Internal Valve
ME205	Airstroke™ by Firestone	ME990-10, ME991-10, ME992-10, ME992-12	Fisher® C407	1-1/4" Threaded
ME205R	Airstroke™ by Firestone	—	RegO® A3209R	1-1/4" Threaded
ME206	#9 Chamber	ME990-16, ME990-24, ME990S-3F-24, ME990S-2DFM, ME991-16, ME991-24, ME992-16, ME992-24, ME993S-16, ME993S-24, ME994S	Fisher® C402, C421, C471,C427, C477	2" & 3" Threaded
ME207	#9 Chamber	ME990S-3DF & ME990S-3DFM	Fisher® C403-24 & C483-24 Series	3" Double Flange
ME207SF	#9 Chamber	ME990-3F	Fisher® C484-24 Series	3" Single Flange
ME208SF	#24 Chamber	ME990-4F	Fisher® C404-32 & C484-32 Series	4" Single Flange
ME710	Airstroke™ by Firestone	—	RegO® Flowmatic® Three-Way Valve	

* Also fits Cavagna 6902900 Series internal valves

ME205

FaStroke Actuators

ME205R

ME710

FEATURES

- Stainless steel all weather bracket
- Field repairable without complete disconnect from internal valve
- Repairable with common automotive brake chamber
- High gloss automotive grade black epoxy coating

ACTUATOR OPERATING PRESSURE LIMITS:

Minimum = 20 PSIG
Maximum = 125 PSIG
Recommended = 20-25 PSIG

PowerStroke Actuators

ME206

ME208SF

ME207

*Internal valves not included

Airstroke™ is a trademark of Firestone Industrial Products Company, Fisher® and Fisher® Internal Valves are the trademarks of Emerson Process Management; RegO® and Flomatic® Internal Valves are the trademarks of Engineered Controls International, Inc. and Cavagna is the trademark of Cavagna Group

INTERNAL VALVE ACCESSORIES

ME990-10-902

MEP990-24

MEP990-4F

LATCHES	
Part No.	**Description**
ME990-10-902	**Excelerator™** Manual Latch Assembly for 1-1/4" & 1-1/2" Threaded Internal Valves
MEP990-24	**Excelerator™** Manual Latch Assy For ME990-16, ME990-24, ME991-16 and ME991-24, ME992-16, ME992-24, ME994S Internal Valves
MEP990-4F	**Excelerator™** Manual Latch Assy For ME990-4F Series

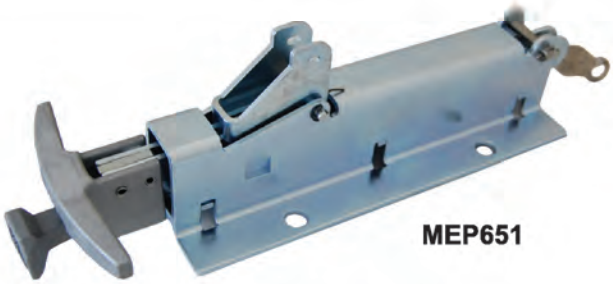

MEP651

RELEASES	
Part No.	**Description**
MEP650	**Excelerator™** Open/Close Cable Control Release with 50' Cable
MEP651	**Excelerator™** Open/Close Cable Control Release - Only

ESV/INTERNAL VALVE ACCESSORIES

ME980-905-25

Part No.	Description
ME980-905	Universal ESV/Internal Valve Remote Release / No Cable
ME980-905-25	Universal ESV/Internal Valve Remote Release W/ 25' Cable
ME980-905-50	Universal ESV/Internal Valve Remote Release W/ 50' Cable
ME980-906-25	Remote Release Cable Assy. 5/16-24UNF - 25' OAL
ME980-906-50	Remote Release Cable Assy. 5/16-24UNF - 50' OAL

EMERGENCY SHUTOFF VALVE ACTUATORS

Designed to be used with emergency shutoff valves in remote locations. Pressure to the line enables a smooth acting cam to completely open the emergency shutoff valve for full flow operation. When pressure to the line is released, the emergency shutoff valve automatically closes. In case of a fire a thermal plug melts at 212° Fahrenheit releasing pressure allowing the ESV to close. These actuators require no modification and all hardware needed for installation is provided.

The PowerTorq direct drive actuator maximizes the life of the emergency shutoff valve be eliminating side pressure on the valve's packing stem.

PowerTorq

FEATURES

- Stainless steel all weather mounting hardware
- Field repairable under full tank pressure
- Low temperature factory installed seals allow use with air, nitrogen, carbon dioxide or LP-Gas vapor
- Anodized aluminum actuator body with easy to see open/close indicator
- No pinch points for operator safety
- Factory installed thermal plug
- Includes mounting bracket for ME707 Quick Release Valve. Note: ME707 is not required for operation

ME552

Actuator Operating Pressure Limits:
Minimum = 25 PSIG
Maximum = 125 PSIG
Recommended = 40-60 PSIG

SAFETY STROKE

ME980 Series
Emergency Shutoff Valves
not included

FEATURES

- Heavy duty stainless steel all weather bracket
- Use with air, nitrogen or carbon dioxide
- Uses existing Fisher® thermal plug

ME551

Actuator Operating Pressure Limits:
Minimum = 20 PSIG
Maximum = 125 PSIG
Recommended = 20-25 PSIG

Part No.	Actuator Type	Fits MEC	Fits	ESV
ME551	Airstroke™ by Firestone	ME980-10, ME980-16, ME980-16-2F, ME980-24, ME980-24-3F, ME980-24-4F	Fisher® N550 Series	1-1/4", 2" & 3"
ME552	Direct Drive	ME980-10, ME980-16, ME980-16-2F, ME980-24, ME980-24-3F, ME980-24-4F	Fisher® N550 Series	1-1/4", 2" & 3"

Airstroke™ is a trademark of Firestone Industrial Products Company, Fisher® and Fisher® Internal Valves are the trademarks of Emerson Process Management

PNEUMATIC CONTROL / E-STOP KIT

Used in conjunction with MEC pneumatic controlled emergency shutoff valves (ESV) or internal valves to remotely open and close using compressed gas. Each kit includes all necessary components for connecting and charging a pneumatic control system complete with brackets, mounting hardware, and necessary placarding in a variety of orientations for fast reliable remote system shutdown.

FEATURES

- Heavy duty pneumatic control and charging valves
- Predrilled mounting plates and hardware
- Large easy to read placards / instruction labels
- Built in leak detection gauge
- Includes 100 FT of 1/4" poly tubing and necessary compression connectors
- Additional extension tubing and connectors available
- Suitable for use with dry air, nitrogen or LPG vapor
- Easy to install

MEP980PN-100

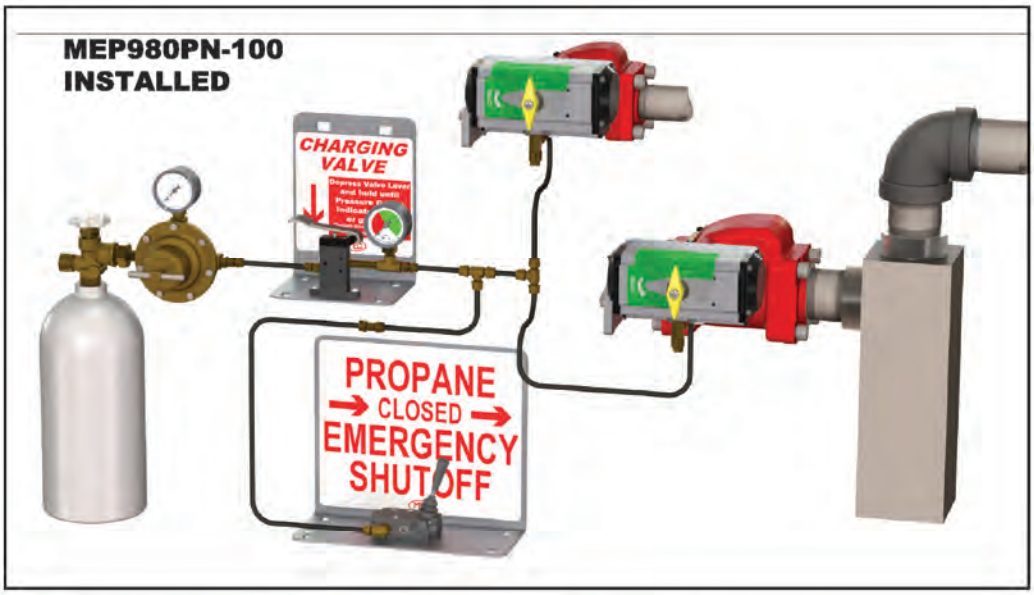

MEC PNEUMATIC CONTROL / E-STOP KIT	
Part No.	**Description**
MEP980PN-100	MEC Complete Pneumatic Controls / E-Stop Kit w/ Placards & 100' Poly Tubing

ACCESSORIES		
Part No.	**Description**	**Material**
MEP980PN-105	Compression Tube Extension Adapter - 1/8" MNPT x 1/4" CC	Brass
MEP980PN-106	Compression Tube Extension Tee - 1/4" CC	Brass
MEP980PN-113	Tubing Extension 1/4" x 100 ft roll	Poly
MEP980PN-901	Pnuematic Remote Charging Valve Assembly with Bracket	—
MEP980PN-602	Pnuematic Remote E-Shutdown Valve Assembly with Bracket	—

EMERGENCY SHUTOFF VALVES

Emergency Shutoff Valves (ESV's) are designed to provide rapid and positive shutdown of gas lines should a down stream rupture or piping break occur. Due to the presence of a built-in fusible element at the valve operating hub the ESV will automatically close when exposed to heat between 212° F. - 250° F. These valves are ideally suited for installation at bulkheads or inline plumbing for automatic emergency shutdown as a result of fire or to provide immediate and positive manual or remote shutdown.

FEATURES

- Powder coated ductile iron body for maximum durability
- Integral swing away check valve with soft seat to promote maximum product flow and minimize product loss in the event of a line failure
- All stainless steel internal component construction provides maximum corrosion resistance
- Flanged end connection for ease of field service
- UL LISTED for use with LP Gas and Anhydrous Ammonia - 400 PSI WOG
- Integral fusible element for automatic closure when exposed to fire
- Durable Teflon® packing gland and resilient seals provide long lasting service life
- Available with pneumatic or cable style latch mechanism

ME980C-6

ME980-10

ME980-24

ME980-16

Made in the U.S.A.

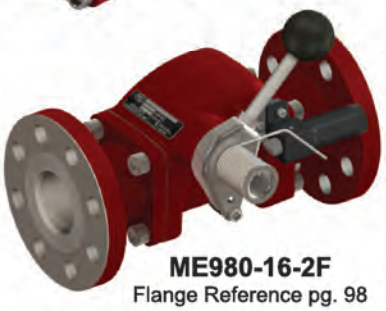

ME980-16-2F

Flange Reference pg. 98

Part No.	Description	Latch Type	Material	Flange Material	OAL
ME980-6	3/4" FNPT Emergency Shutoff Valve (ESV)	Pneumatic	Ductile Iron	Ductile Iron	4-3/4"
ME980-8	1" FNPT Emergency Shutoff Valve (ESV)	Pneumatic	Ductile Iron	Ductile Iron	4-3/4"
ME980C-6	3/4" FNPT Emergency Shutoff Valve (ESV)	Cable	Ductile Iron	Ductile Iron	4-3/4"
ME980C-8	1" FNPT Emergency Shutoff Valve (ESV)	Cable	Ductile Iron	Ductile Iron	4-3/4"
ME980-10	1-1/4" FNPT Emergency Shutoff Valve (ESV)	Pneumatic	Ductile Iron	Ductile Iron	5-3/8"
ME980C-10	1-1/4" FNPT Emergency Shutoff Valve (ESV)	Cable	Ductile Iron	Ductile Iron	5-3/8"
ME980-12	1-1/2" FNPT Emergency Shutoff Valve (ESV)	Pneumatic	Ductile Iron	Ductile Iron	5-3/8"
ME980C-12	1-1/2" FNPT Emergency Shutoff Valve (ESV)	Cable	Ductile Iron	Ductile Iron	5-3/8"
ME980-16	2" FNPT Emergency Shutoff Valve (ESV)	Pneumatic	Ductile Iron	Cast Steel	6-7/8"
ME980C-16	2" FNPT Emergency Shutoff Valve (ESV)	Cable	Ductile Iron	Cast Steel	6-7/8"
ME980-24	3" FNPT Emergency Shutoff Valve (ESV)	Pneumatic	Ductile Iron	Ductile Iron	9-5/8"
ME980C-24	3" FNPT Emergency Shutoff Valve (ESV)	Cable	Ductile Iron	Ductile Iron	9-5/8"
ME980-16-2F	2" - 300 lb. Flange Emergency Shutoff Valve (ESV)	Pneumatic	Ductile Iron	Ductile Iron	11-7/8"
ME980C-16-2F	2" - 300 lb. Flange Emergency Shutoff Valve (ESV)	Cable	Ductile Iron	Ductile Iron	11-7/8"
ME980-24-3F	3" - 300 lb. Flange Emergency Shutoff Valve (ESV)	Pneumatic	Ductile Iron	Ductile Iron	14-1/8"
ME980C-24-3F	3" - 300 lb. Flange Emergency Shutoff Valve (ESV)	Cable	Ductile Iron	Ductile Iron	14-1/8"
ME980-24-4F	4" - 300 lb. Flange Emergency Shutoff Valve (ESV)	Pneumatic	Ductile Iron	Ductile Iron	14-1/4"
ME980C-24-4F	4" - 300 lb. Flange Emergency Shutoff Valve (ESV)	Cable	Ductile Iron	Ductile Iron	14-1/4"

To order ESV with Pneumatic Actuator add "A" after the prefix part number i.e. ME980A-10
To order ESV with Rotary Actuator add "AR" after the prefix part number i.e. ME980AR-10

HIGH CAPACITY - INLINE THREADED

Specifically designed to allow inline installation of threaded internal safety valves in place of traditional emergency shutoff valves. Each bell housing is designed with internal contours to allow ample unrestricted flow around standard internal safety valve closing poppets for reliable excess flow protection in the event of a downstream line failure or separation. Ideally suited for use in protecting bulkhead loading/unloading lines or other point of transfer applications when used with MEC Excelerator™ Internal Safety Valves.

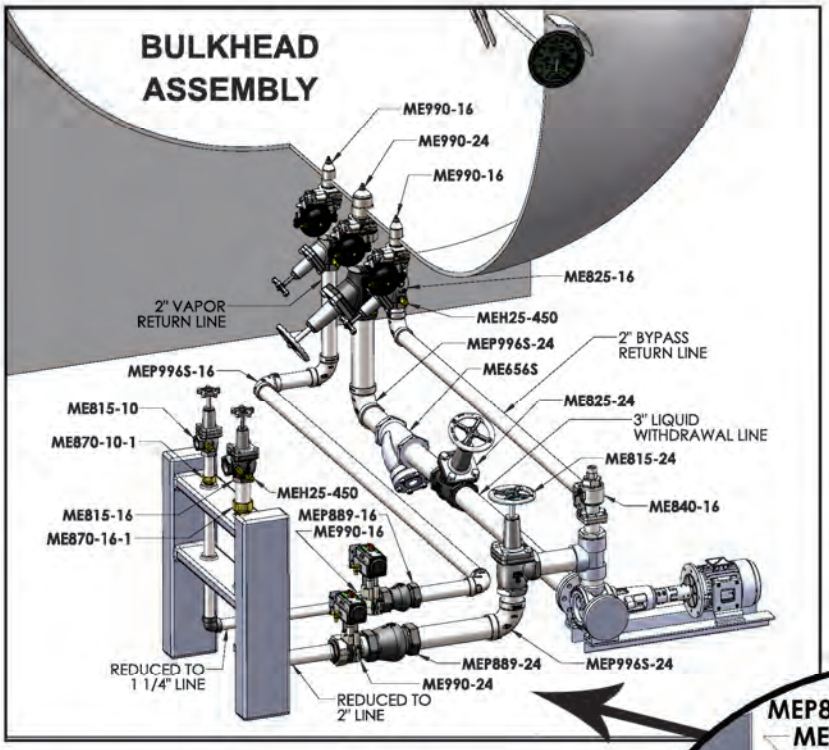

MEP889-24

MEP889-16

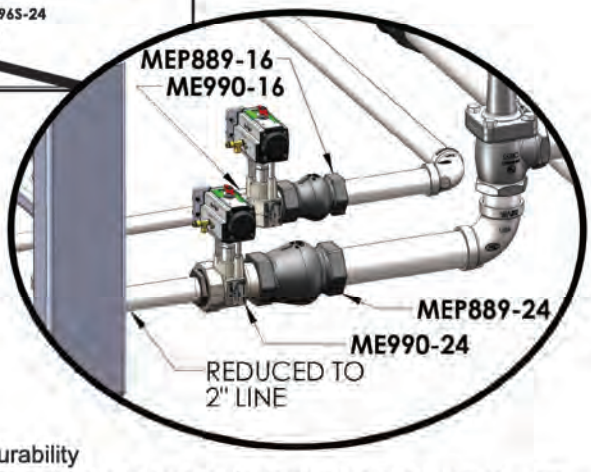

FEATURES

- Cadmium plated ductile iron body for maximum durability
- Provides dependable excess flow protection when used with internal safety valve installed downstream
- Internal safety valves provide thermal fire protection and can be operated with manual latch or pneumatic open/close actuators
- Ideal for step down line sizing excess flow protection for compliance to NFPA 58
- Exceptionally reliable, safe, and cost effective protection of liquid or vapor transfer lines

High Capacity Inline Threaded ESV/ISV Bell Housing		
Part No.	**Description**	**Fits Internal Valve Models**
MEP889-24	3"FNPT Inline ESV/ISV Bell Housing	ME990-24 Series
MEP889-16	2"FNPT Inline ESV/ISV Bell Housing	ME990-16 Series

EMERGENCY SHUTOFF VALVES

HIGH CAPACITY - FLANGED

Emergency Shutoff Valves (ESV's) are designed to provide rapid and positive shutdown of gas lines should a downstream rupture or piping break occur. Due to the presence of a built-in fusible element at the valve operating hub the ESV will automatically close when exposed to heat between 212° F. - 250° F. These valves are ideally suited for installation at bulkheads or inline plumbing for automatic emergency shutdown as a result of fire or to provide immediate and positive manual or remote shutdown.

ME980SAR-4DFM

FEATURES

- Cadmium plated steel / ductile iron body for maximum durability
- Long stroke internal valve poppet for maximum product flow
- All stainless steel internal component construction provides maximum corrosion resistance
- Flanged end connection for ease of field service
- UL Listed for use with LP Gas and Anhydrous Ammonia - 400 PSI WOG
- Integral fusible element for automatic closure when exposed to fire
- Durable Teflon® packing gland and resilient seals provide long lasting service life
- Pre-mounted inlet bell housing for quick and easy installation
- All mounting hardware included

EMERGENCY SHUT OFF VALVES (ESV's)		
Part No.	**Description**	**Actuator Type**
ME980SAR-4DFM	4" - 300LB Flange Emergency Shutoff Valve (ESV)	Rotary
ME980SAR-6DFM	6" - 300LB Flange Emergency Shutoff Valve (ESV)	Rotary

ESV/ISV BELL HOUSING KITS

HIGH CAPACITY - FLANGED

Used in conjunction with MEC Excelerator™ flanged internal valves for excess flow protection on inline or drop down weld neck tank construction. Each bell housing is carefully contoured to allow ample unrestricted flow around the internal valve closing poppet for accurate and reliable excess flow protection in the event of a downstream line failure or separation. Ideally suited for protection of weld neck tank openings or as replacements to traditional emergency shut off (ESV) installations.

Part No.	Description	Fits Internal Valve Models
MEP990-2DFM	2"-300# Double Flange ESV/ISV Bell Housing Kit	ME990S-2DFM Series
MEP990-3DFM	3"-300# Double Flange ESV/ISV Bell Housing Kit	ME990S-3DFM Series
MEP990-4DFM	4"-300# Double Flange ESV/ISV Bell Housing Kit	ME990S-4DFM Series
MEP990-6DFM	6"-300# Double Flange ESV/ISV Bell Housing Kit	ME990S-6DFM Series

FEATURES

- Cadmium plated ductile iron body for maximum durability
- Precise interior contour for maximum flow around internal valve poppet
- Includes all studs/nuts & gaskets
- Suitable for use as inline ESV when used in conjunction with Excelerator™ Internal Valves (internal valve sold separately)
- For use with LPG & NH3 - 400 PSI WOG

FLANGE REDUCING SPOOL ADAPTER

Used in conjunction with MEC Excelerator™ flanged internal valves for excess flow protection on inline or drop down weld neck tank construction to safely increase or decrease tank connections or line sizing in accordance to NFPA #58 code requirements. Each bell housing is carefully contoured to allow ample unrestricted flow around the internal valve closing poppet for accurate and reliable excess flow protection in the event of a downstream line failure or separation. Ideally suited for protection of weld neck tank openings, as replacements to traditional emergency shut off (ESV) installations or to adapt flanged vapor relief tank openings from 4" to 3" or vice versa such as needed to replace ACF type relief valves.

FEATURES

- Cadmium plated ductile iron body for maximum durability
- Precise interior contour for maximum flow around internal valve poppet
- Includes all studs/nuts & gaskets
- Suitable for use as inline ESV when used in conjunction with Excelerator™ Internal Valves (internal valve sold separately)
- For use with LPG & NH3 - 400 PSI WOG

MEP990-4DFM/3DFM

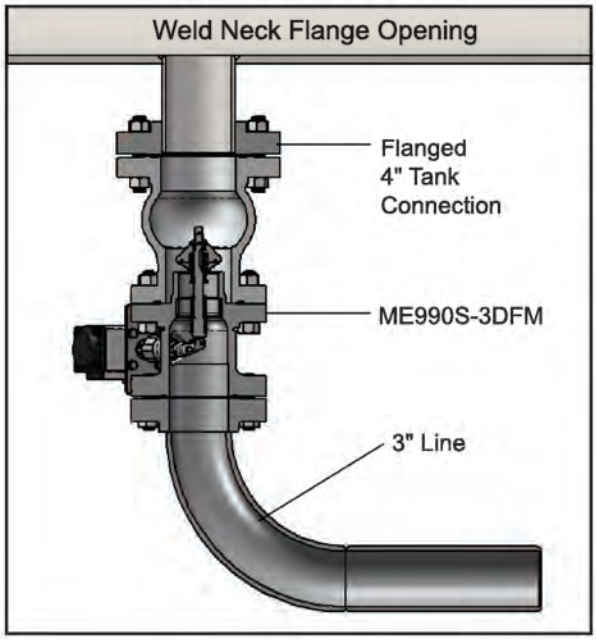

4" x 3" Flange Adapting Spool		
Part No.	**Description**	**Fits Internal Valve Models**
MEP990-4DFM/3DFM	4"-300LB x 3"-300LB Flanged ACF/ESV/ISV Adapting Spool Kit	ME990S-3DFM Series

Excelerator™ HIGH FLOW RAILCAR ESV

Excelerator Railcar Emergency Shutoff Valves (ESV's) are designed to provide rapid and positive shutdown of gas lines should a downstream rupture or piping break occur during product transfer. Featuring a built-in fusible element at the valve operating hub to ensure the ESV will automatically close when exposed to heat between 212° F. - 250° F. In addition to the fusible element, the Excelerator Railcar ESV's are equipped with a poppet design similar the MEC internal safety valves that provides an integral excess flow feature. MEC offers a variety of closing flow values ranging from very high liquid flow rates to more moderate vapor flow rates depending on the application. MEC Excelerator Railcar ESV's are equipped standard with quick disconnect internal pneumatic operators for rapid and reliable open/close of the poppet allowing for convenient on site or remote shutdown of the valve.

FEATURES

- 316 Stainless Steel Body
- All stainless steel internal component construction provides maximum corrosion resistance
- Hardened stainless steel flanged end connection for durability and ease of field service
- UL Listed for use with LP Gas and Anhydrous Ammonia - 400 PSI WOG
- Integral fusible element for automatic closure when exposed to fire
- Durable PTFE packing gland with resilient seals providing long lasting service life
- 100% field repairable - no special tools required
- E-Z grip ribs for installation even with heavy protective hand wear

Made in the U.S.A.

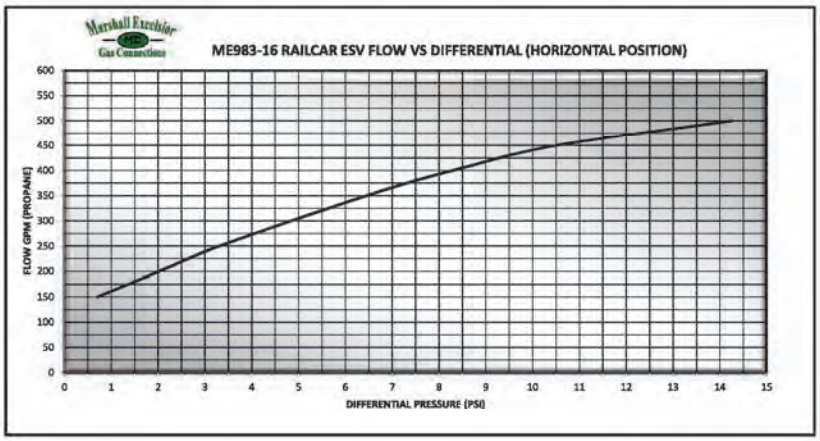

ME983 Series UL

Part No.	Description	Closing Flow GPM/LPG
ME983-16/150	High Flow Railcar ESV 2" FNPT X 2" FNPT	150*
ME983-16/250	High Flow Railcar ESV 2" FNPT X 2" FNPT	250
ME983-16/500	High Flow Railcar ESV 2" FNPT X 2" FNPT	500
ME983-16	High Flow Railcar ESV 2" FNPT X 2" FNPT	~

* Recommended for vapor service - approx. closing flow 71,000 SCFH/LP
~ Available with Kalrez, Viton and Neoprene seal materials
~ For NH3 multiply GPM by .90

FLOW INDICATING SWING CHECK VALVES

Promotes maximum pump efficiency by providing system operators with a visual inspection point for monitoring liquid flow conditions as well as providing a soft seat back check valve to prevent reverse product flow. Installation of a flow indicating swing check valve upstream of the pump allows the operator to observe product flow and make pump adjustments for maximum flow without cavitation. Suitable for stationary and mobile applications.

ME981-10
Indicating Check Valve

ME982-10

ME981-6

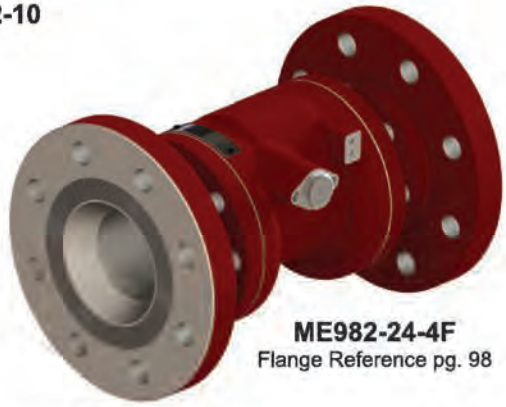

ME982-24-4F
Flange Reference pg. 98

FEATURES

- Powder coated ductile iron body for maximum durability
- Removable flanged ends for ease of field service
- Integral swing away check valve with soft seat to promote maximum product flow and prevent reverse product flow
- All stainless steel internal component construction provides maximum corrosion resistance
- Magnetically coupled flow indicator for maximum protection against leaks and minimal resistance to product flow
- Clear/Easy to read flow indicator with "Glow" arrow allows the operator to easily see if the valve is open or closed
- UL LISTED for use with LP Gas and Anhydrous Ammonia - 400 PSI WOG

Part No.	Description	Material	Flange Material	OAL
ME981-6	3/4" FNPT Flow Indicating Check Valve	Ductile Iron	Ductile Iron	4-3/4"
ME981-8	1" FNPT Flow Indicating Check Valve	Ductile Iron	Ductile Iron	4-3/4"
ME981-10	1-1/4" FNPT Flow Indicating Check Valve	Ductile Iron	Ductile Iron	5-3/8"
ME981-16	2" FNPT Flow Indicating Check Valve	Ductile Iron	Cast Steel	6-7/8"
ME981-24	3" FNPT Flow Indicating Check Valve	Ductile Iron	Ductile Iron	9-5/8"
ME982-10	1-1/4" FNPT Non-Indicating Check Valve	Ductile Iron	Ductile Iron	5-3/8"
ME982-16	2" FNPT Non-Indicating Check Valve	Ductile Iron	Cast Steel	6-7/8"
ME982-24	3" FNPT Non-Indicating Check Valve	Ductile Iron	Ductile Iron	9-5/8"
ME981-16-2F	2" - 300 lb. Flange Flow Indicating Check Valve	Ductile Iron	Ductile Iron	11-7/8"
ME981-24-3F	3" - 300 lb. Flange Flow Indicating Check Valve	Ductile Iron	Ductile Iron	14-1/8"
ME981-24-4F	4" - 300 lb. Flange Flow Indicating Check Valve	Ductile Iron	Ductile Iron	14-1/4"
ME982-16-2F	2" - 300 lb. Flange Flow Non-Indicating Check Valve	Ductile Iron	Ductile Iron	11-7/8"
ME982-24-3F	3" - 300 lb. Flange Flow Non-Indicating Check Valve	Ductile Iron	Ductile Iron	14-1/8"
ME982-24-4F	4" - 300 lb. Flange Flow Non-Indicating Check Valve	Ductile Iron	Ductile Iron	14-1/4"

SIGHT FLOW SWING CHECK VALVE

Excela-Flange Series

The ME874S-16 Sight Flow Swing Check Valves feature our new modular Excela-Flange 4-Bolt Inlet/Outlet design that can be easily adapted to both NPT thread or socket weld type A companion flanges (ME840 & ME841 Series) from 1-1/4" - 2" in diameter making it universal to piping sizes within this range. MEC Sight flow valves are designed with the most durable, impact resistant glass in the industry. This sight flow valve allows bulk plant operators an inspection point to visually monitor liquid flow conditions which allows the operator to achieve maximum pump efficiency. They also features a soft seat swing away check valve which limits flow to one direction. This check valve is usually closed until pressure activates the valve when flow is directed into piping or containers causing the valve to open. When flow stops or reverses, the check returns to the closed position minimizing product loss in the event of a line failure.

Installing a sight flow valve upstream of a plant pump, allows the operator to observe product flow and make pump adjustments for maximum flow without the liquid forming vapor bubbles causing uneven flow patterns and significantly reducing efficiency. Additionally, installing a sight flow valve at the loading arm of a plant allows the operator to maintain consistent observation of pump conditions. This valve is suitable for stationary and mobile applications. Installing this valve on a compressor operation will provide a visual indication of when the tank car or transport is emptied of liquid and ready for vapor recovery.

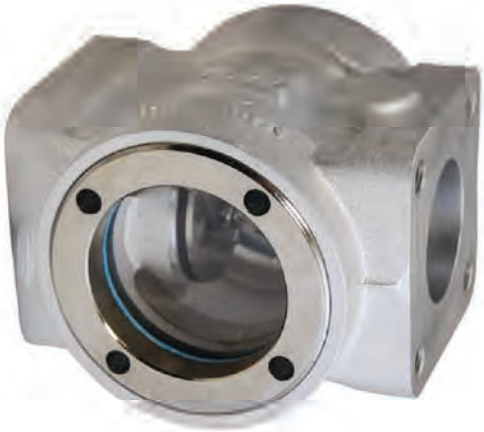

c UL us

For LP-Gas & NH_3

FEATURES

- 4 bolt universal inlet / outlet flanges
- Specially formulated, large diameter, impact resistant sight glass with O-ring packing seals for maximum safety and visibility
- Durable ductile iron body with cadmium plated finish for maximum durability
- All stainless steel internal components for maximum corrosion resistance
- Integral swing check valve with soft seat to promote maximum product flow and minimize product loss in the event of a line failure
- Standard nitrile seat, available in Viton® or Kalrez®
- UL Listed for use with LP Gas and NH3 - 400 PSI / WOG
- For use with all Type A (ME840 & ME841 Series) companion flanges

Part No.*	Description	Inlet	Outlet	Mating Flange Type	Weight (lbs.)
ME874S-16	2" - 4 Bolt Double Flange Sight Flow Valve	4 Bolt Flange Type B	4 Bolt Flange Type B	A	16.0

Viton® and Kalrez® are trademarks of DuPont Performance Elastomers
* To order no check add "NC" after the prefix part number - i.e. ME874SNC-16

SIGHT FLOW SWING CHECK VALVE

Designed with the most durable, impact resistant glass in the industry. This sight flow valve allows bulk plant operators an inspection point to visually monitor liquid flow conditions which allows the operator to achieve maximum pump efficiency. Also features a soft seat swing away check valve which limits flow to one direction. This check valve is usually closed until pressure activates the valve when flow is directed into piping or containers causing the valve to open. When flow stops or reverses, the check returns to the closed position minimizing product loss in the event of a line failure.

Installing a sight flow valve upstream of a plant pump, allows the operator to observe product flow and make pump adjustments for maximum flow without the liquid forming vapor bubbles causing uneven flow patterns and significantly reducing efficiency. Additionally, installing a sight flow valve at the loading arm of a plant allows the operator to maintain consistent observation of pump conditions. This valve is suitable for stationary and mobile applications.

Installing this valve on a compressor operation will provide a visual indication of when the tank car or transport is emptied of liquid and ready for vapor recovery.

FEATURES

- Specially formulated, large diameter, impact resistant sight glass with O-ring packing seals for maximum safety and visibility
- Durable ductile iron body with cadmium plated finish for maximum durability
- All stainless steel internal components for maximum corrosion resistance
- Integral swing check valve with soft seat to promote maximum product flow and minimize product loss in the event of a line failure
- Standard nitrile seat, available in Viton® or Kalrez®
- (UL) Listed for use with LP Gas and NH3 - 400 PSI / WOG
- Hexagon cast ends for ease of installation

ME875S-16

c UL us

For LP-Gas & NH_3

NEW CONFIGURATION

ME875S-3F

Part No.(1)	Inlet & Outlet FNPT	Seal Material	OAL
ME875S-16	2" FNPT	Nitrile	5-3/4"
ME875SN-16		Neoprene	5-3/4"
ME875SV-16		Viton®	5-3/4"
ME875S-24	3" FNPT	Nitrile	7-3/8"
ME875SN-24		Neoprene	7-3/8"
ME875SV-24		Viton®	7-3/8"
ME875S-3F (2)	3"-300LB Flange	Nitrile	10-1/2"

(1)To order no check add "NC" after the prefix part number - i.e. ME874SNC-16
(2) Not a UL Listed Configuration

Viton® is a trademark of DuPont Performance Elastomers.

Y-STRAINERS

Designed for flow in one direction to guard against debris in pipelines that could cause damage to pumps, valves or other equipment. Can be installed horizontally or vertically. They are available in three stainless steel mesh sizes. The mesh size equals the number of holes per square inch i.e. the smaller the number the larger the holes.

A shutoff valve installed on the filter basket outlet allows for convenient blow-off cleaning of Y-Strainer while under pressure. The ME656S Series Ductile Iron Strainers are available in 3" or 4" -300LB ANSI flange sizes with threaded blow-off ports. All strainers come standard with 40 mesh stainless steel reinforced screens for maximum durability and protection of downstream equipment. Plugs for the threaded blow-offs are available at additional cost.*

ME653SP

ME655S

ME656S

FEATURES

- Durable ductile iron body with automotive grade powder coat finish
- Rated 600 PSI / WOG
- Optional factory installed plug*
- Designed for LP-Gas or NH_3

ME656S-3F

ME656S-3F-901
ME656S-3F
Replacement Screen

See replacement parts section

Part No.*			Blow-Off Plug Size	Inlet & Outlet FNPT
20 Mesh Screen	40 Mesh Screen	80 Mesh Screen		
ME650S/20	ME650S	ME650S/80	1/2"	1/2"
ME651S/20	ME651S	ME651S/80	1/2"	3/4"
ME652S/20	ME652S	ME652S/80	3/4"	1"
ME653S/20	ME653S	ME653S/80	3/4"	1-1/4"
—	ME654S	—	1"	1-1/2"
ME655S/20	ME655S	ME655S/80	1"	2"
	ME655S-2F	—	1"	2"-300 LB Flange
—	ME656S	ME656S/80	1-1/4"	3"
—	ME656S-3F	—	1-1/4"	3"-300 LB Flange
—	ME656S-4F	—	1-1/4"	4"-300 LB Flange

* To add a factory installed plug use a "P" after the prefix number i.e. ME650SP/20

LPG/NH_3 HIGH CAPACITY DISPENSING FILTER

The new ME680 LPG/NH3 Dispenser Filter is designed to remove 99.9% of solid contaminants. These contaminants can be introduced into the system during the refining process from holding tanks as well as the delivery trucks used to transport the liquid fuel. This filter is used to protect critical engine components such as fuel injectors on propane powered vehicles which include: shuttle buses, delivery trucks and vans, taxi cabs, lift trucks, as well as turf maintenance vehicles.

The filter housing is constructed from high strength forged aluminum. The entire housing is powder coated for long term outdoor use. There are two internal primary seals inside the filter element used to prevent contaminants from entering into the downstream. There is a 1" hex nut located on the bottom of the bowl for easy removal and maintenance.

The element is constructed of pleated micro glass media, reinforced with an epoxy coated wire for added strength and corrosion resistance. This pleated element design offers a higher contaminant-loading capacity and offers a lower pressure drop than other standard elements. The element also has a pleated steel inner retainer for additional strength and durability.

FEATURES

- High-grade forged aluminum body construction
- Durable powder coated exterior
- 5/16-18 UNC tapped mounting holes for easy installation
- 1" hex nut on bottom of bowl for easy maintenance
- Pleated element offers higher contaminant loading capacity and lower pressure drop
- 35 GPM/LPG @ 6.2 PSI pressure differential
- Removes solid contaminants from LPG/NH_3 (20 micron rated element)
- 1" FNPT inlet/outlet connections
- 350 PSI maximum pressure
- 1/4" FNPT plugged ports both upstream and downstream of the filter element

SPECIFICATIONS:

Port Size: 1" NPT
Max Pressure: 350 PSIG
Max. Temp: 175° F (79° C)

Head Material: Aluminum
Internal Components: Stainless Steel
Bowl: Aluminum
Seals: Nitrile

Weight: 5.5 lbs
Length: 8.07"
Width: 5.00"

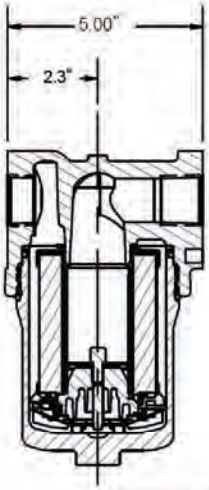

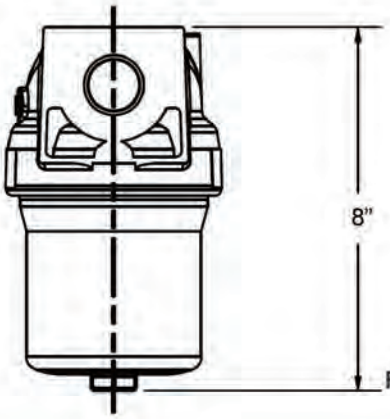

ME680-8-ERK
ME680-8
Replacement Filter Element

See replacement parts section

Part No.	Description	Inlet	Outlet	Filter Element	Flow Rate *
ME680-8	High Capacity Dispensing Filter	1" FNPT	1" FNPT	20 micron	35 GPM/LPG
Inline Filters					
Part No.	**Description**				
ME204	1/4"MNPTx1/4"FNPT Brass Gauge Dampener / Filter				
ME709	1/4"FNPT x 1/4"MNPT Inline Fuel Filter				

ME204

ME709

PIPEAWAY ADAPTERS

Designed to be installed between semi-internal pressure relief valves and vent stacks or at any point in plant plumbing where breakaway protection is needed. This plated steel adapter has a weak section to help protect the relief valve if vent stack is damaged or to help protect plant plumbing from catastrophic failure.

Part No.	Inlet & Outlet	Material
MEP104-24	3" FNPT	Steel

For LP-Gas & NH_3

BREAKAWAY BULK HEAD ADAPTERS

Designed to be installed on the stantion head or at any point in plant plumbing where breakaway protection is needed. Internal hex broach allows for easy removal from plumbing if broken off.

Part No.	Inlet & Outlet	Material
ME870-6-1	3/4" NPT	Brass
ME870-10-1	1-1-4" NPT	Brass
ME870-16-01	2" NPT	Brass

ME870-16-01

CLAMP STYLE HOSE COUPLINGS

These hose couplings are user friendly and can be easily installed in the field. A steel or ductile hose barb is inserted into the hose and two outer clamps, positioned on the outside of the hose, have a boss to keep the bolts from rotating while the clamps compress the hose for a leak free seal.

NOTE: Clamps must be installed with clamp lip fully engaged into flange groove on hose barb body.

FEATURES

- Hose barbs constructed of zinc plated steel or ductile iron with automotive grade powder coat finish
- Ductile iron body
- Optional integrated female Acme swivel eliminates weight of additional couplings
- Includes hose barb and two clamps, nuts and bolts

ME3162-32B

ME3162-32S

ME3162-20

Part No.	Hose Barb	Outlet MNPT	Exterior Finish
ME3162-08	1/2"	1/2"	Zinc Plated Steel
ME3162-12	3/4"	3/4"	
ME3162-12S	3/4"	1-3/4" F. Acme Steel	
ME3162-1216	3/4"	1"	
ME3162-16	1"	1"	
ME3162-16S	1"	1-3/4" F. Acme Steel	
ME3162-1612	1"	1-1/4"	
ME3162-2016	1-1/4"	1"	
ME3162-20	1-1/4"	1-1/4"	Powder Coated Ductile Iron
ME3162-2018S	1-1/4"	1-3/4" F. Acme Steel	
ME3162-2020S	1-1/4"	2/1/4" F. Acme Steel	
ME3162-24	1-1/2"	1-1/2"	
ME3162-24S	1-1/2"	2-1/4" F. Acme Steel	
ME3162-32	2"	2"	
ME3162-32B*	2"	3-1/4" F. Acme Brass	
ME3162-32S	2"	3-1/4" F. Acme Steel	

NOTE: Rated for LP-Gas

Designed to provide a safe way to transfer LP-Gas and NH_3 without sacrificing flow. The ***FloKill***™ Breakaway Coupling flows both directions and protects against expensive loss of product or equipment damage if a pull-away occurs during a transfer operation. One end of the breakaway coupling should be attached to a fixed or sturdy point. In the event of an excessive amount of pull force, the breakaway coupling will separate and immediately shutoff product flow in both directions.

To reconnect the valve, pressure needs to be relieved from both ends of the line, therefore it is recommended that a safe way to bleed down the line is provided upstream and downstream. After the lines have been depressurized use Marshall Excelsior's re-installation tool (MEP128-6) for 3/4" or slide the male end into the female side and pull the collar back until they lock. After reconnection the line must be tested using Marshall Excelsior Leak Detector to check for leaks before any product is transferred. The breakaway coupling may be used on vapor or liquid lines on transports, delivery trucks, motor fuel containers, fill cabinets and other miscellaneous filling operations.

NOTE: It is recommended that breakaway couplings be safety tested monthly to confirm that proper separation occurs in the event of a pull-away. Dry air is suggested for a source of pressure during testing.

ME860S-6

ME861S-6

FEATURES

- Nitrile soft seat provides positive shutoff both upstream and downstream of source
- 100—300 lbs of force required for disconnect
- Approximately 100 lbs of force to reconnect
- Large internal bore for increased flow
- Durable plated steel construction
- Rated for LP-Gas & NH_3

NEW 2" MODEL

ME861S-16

Part No.		Connection FNPT	OAL Length	Accessory
Bracket Style	Lanyard Style			Reassembly Tool
ME860S-6	ME861S-6	3/4"	6"	MEP128-6
ME860S-8	ME861S-8	1"	6-3/4"	—
ME860S-10	ME861S-10	1-1/4"	7-3/4"	—
—	ME861S-16*	2"	10-1/4"	—

*** Rated for LP Gas Only**

MEP128-6
Coupling Not Included

FILLER & VAPOR COUPLINGS

These couplings are used as connections between the hose and transfer valve. The filler coupling is designed to provide different connections for the end of a hose (inlet) or an angle, globe or quick acting valve (outlet) when transferring liquid. The vapor coupling is designed to be used with valves having an upper check mechanism. The nose piece on the vapor coupling opens the check valve allowing vapor equalization.

The extended style has a stainless steel female Acme nut insert cast into the heavy duty aluminum handle. All filler and vapor couplings come with a factory installed retaining ring unless noted. The retaining ring limits the travel of the handle or nut during disconnect reducing spin-offs and promoting proper venting of the captured product.

ME664-24

EXTENDED STYLES

ME645G Series
Stainless Steel

ME635 Series
Heavy Duty Aluminum Standard Handle

ME635G Series
Heavy Duty Aluminum Fluted Handle

Service Type	Part No. Brass Knurled Nut	Brass Wing Nut	Brass Wing Nut/Steel Nipple	Steel* Knurled Nut	Steel* Wing Nut	Steel* Extended Handle Standard	Steel* Extended Handle Fluted	F. Acme	MNPT
Liquid	ME100	—	—	—	—	—	—	1-1/4"	3/8"
	ME101	—	—	—	—	—	—	1-1/4"	1/2"
	ME110	ME110C	—	—	—	ME635-4	ME635G-4	1-3/4"	1/2"
	ME111	ME111C	—	ME111S	ME111SC	ME635-6	ME635G-6	1-3/4"	3/4"
	—	—	—	—	ME113SC	—	—	1-3/4"	3/4" FNPT
	ME112	ME112C	—	ME112S	ME112SC	ME635-8	ME635G-8	1-3/4"	1"
	—	—	—	—	—	ME635-10	ME635G-10	1-3/4"	1-1/4"
	—	ME120** ME120WR	ME120S** ME120SWR	—	ME121S** ME121SWR	—	—	2-1/4"	1-1/4"
	—	ME130B** ME130BWR	ME130** ME130A*** ME130WR	—	ME130S** ME130SWR	—	—	3-1/4"	2"
	—	—	ME664-24 (Bronze/Steel)	—	ME634-24	—	—	4-1/4"	3"
Vapor	ME140	—	—	—	—	—	—	1-1/4"	3/8"
	ME141	—	—	ME141S	—	—	ME645G-4	1-1/4"	1/2"
	—	—	—	—	—	—	ME645G-6	1-1/4"	3/4"
	—	—	—	—	—	ME646-4	ME646G-4	1-3/4"	1/2"
	ME150	ME150C	—	ME150S	ME150SC	ME646-6	ME646G-6	1-3/4"	3/4"
	ME151	ME151C	—	ME151S	ME151SC	ME646-8	ME646G-8	1-3/4"	1"
	—	—	—	—	—	ME646-10	ME646G-10	1-3/4"	1-1/4"
	—	—	ME160	—	ME160S	—	—	2-1/4"	1-1/4"

* Rated for LP-Gas & NH_3
** Does not include a factory installed retaining ring
*** Includes factory installed filter screen

NOTE: Pressure rated for 400 WOG
ME634-24 & ME664-24 Non-UL Rated

Part No.			M. Acme	FNPT	MNPT
Brass		Steel*			
No Screen	Factory Installed Screen				
ME498-4/2	—	—	1-1/4"	1/4"	1/2" **
ME498-6/3	—	—	1-1/4"	3/8"	3/4" **
ME192	—	—	1-1/4"	1/2"	—
ME193	—	—	1-1/4"	3/4"	—
ME210	—	—	1-3/4"	1/4"	—
ME211	—	—	1-3/4"	3/8"	—
ME212	—	—	1-3/4"	1/2"	—
ME213	—	ME213S	1-3/4"	3/4"	—
ME214	—	ME214S	1-3/4"	1"	—
ME502-12/8	—	—	2-1/4"	1"	1-1/2" **
ME502-16/10	—	ME502S-16/10	2-1/4"	1-1/4"	2" **
ME502-16/12	—	—	2-1/4"	1-1/2"	2" **
ME250	ME250A	—	3-1/4"	1-1/4"	—
ME251	ME251A	—	3-1/4"	1-1/2"	—
ME252-16	ME252A-16	ME252S-16	3-1/4"	2"	—
ME508-24	ME508A-24	ME508S-24	3-1/4"	3"	—

* Rated for LP-Gas & NH_3
** Male Thread Outside & Female Thread Inside
NOTE: Pressure rated for 400 WOG


ME192


ME212


ME252S-16


ME503J-16

1/4" FNPT with Vent Hole & #54 Orifice


ME503JB-16

Brass Vent Valve


ME503JS-16

Stainless Steel Vent Valve

Part No.						M. Acme	FNPT/ MNPT
Brass			Steel*				
Factory Machined 1/4" FNPT with Vent Hole	Factory Installed Brass Vent Valve	Factory Installed Stainless Steel Vent Valve	Factory Machined 1/4" FNPT with Vent Hole	Factory Installed Brass Vent Valve	Factory Installed Stainless Steel Vent Valve		
ME252J-16	ME252JB-16	ME252JS-16	ME252SJ-16	ME252SJB-16	ME252SJS-16	3-1/4"	2" FNPT
ME503J-16	ME503JB-16	ME503JS-16	ME503SJ-16	ME503SJB-16	ME503SJS-16	3-1/4"	2" MNPT

NOTE: To add a factory installed screen use an "A" after the prefix number i.e. ME252AJB-16
Pressure rated for 400 WOG
* Rated for LP-Gas & NH_3

ACME ADAPTERS

Part No.					M. Acme	MNPT	FNPT
Brass			Steel *				
No Screen	1/8" FNPT Side Port	Factory Installed Screen	No Screen	1/8" FNPT Side Port			
ME498-4/2	—	—	—	—	1-1/4"	1/2"	1/4" **
ME498-6/3	—	—	—	—	1-1/4"	3/4"	3/8" **
—	—	—	ME520S-8	—	1-1/4"	1"	—
—	—	—	ME521S-4	—	1-3/4"	1/2"	—
ME215	—	—	ME215S	—	1-3/4"	3/4"	—
ME216	—	—	ME216S	—	1-3/4"	1"	—
ME217	ME217J	ME217A	ME217S	ME217SJ	1-3/4"	1-1/4"	—
ME233	ME233J	—	ME233S	ME233SJ	2-1/4"	1-1/4"	—
ME502-12/8	—	—	—	—	2-1/4"	1-1/2"	1" **
ME502-16/10	—	—	ME502S-16/10	—	2-1/4"	2"	1-1/4" **
ME502-16/12	—	—	—	—	2-1/4"	2"	1-1/2" **
ME503-16	—	ME503A-16	ME503S-16	—	3-1/4"	2"	—
ME503-20	—	ME503A-20	—	—	3-1/4"	2-1/2"	—
ME262	—	ME262A	ME262S	—	3-1/4"	3"	—
ME504-24***			ME524-24***		4-1/4"	3"	—

* Rated for LP-Gas & NH_3 **NOTE**: Pressure rated for 400 WOG
** Male Thread Outside & Female Thread Inside
*** Not a UL Listed Configuration


ME215S


ME233S


ME524-24

Part No.		M. Acme	Female UNC Thread
Brass	Steel*		
ME209	ME209S	1-3/4"	3/8"-16
To hold hose end valve secure when not in use			

* Rated for LP-Gas & NH_3


MEP503


MEP503K Installed
(ME503-16 not included)

Part No.	Description
MEP503	Conical Filter Screen only for 3-1/4" M Acme Adapters 30 Mesh - Stainless Steel
MEP503K	Conical Filter Screen and Retainer for 3-1/4" M Acme Adapters 30 Mesh - Stainless Steel

Part No.		M. Acme	M. Acme
Brass	Steel *		
ME270	—	1-1/4"	1-1/4"
ME273	ME273S	1-3/4"	1-3/4"
ME275	ME275S	2-1/4"	2-1/4"
ME277	ME277S	3-1/4"	3-1/4"

* Rated for LP-Gas & NH_3

ACME REDUCER COUPLINGS

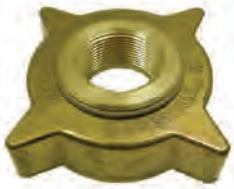
ME442

Part No.		F. Acme	M. Acme
Brass	Steel *		
ME611	ME611S	2-1/4"	1-3/4"
ME612	ME612S	3-1/4"	1-3/4"
ME614	ME614S	3-1/4"	2-1/4"
ME442	ME442S	3-1/4"	1-1/4" FNPT
ME613**	ME623**	4-1/4"	3-1/4"

* Rated for LP-Gas & NH_3
** Not a UL Listed Configuration
NOTE: Pressure rated for 400 WOG

ME613
Bronze/Brass


ME612S

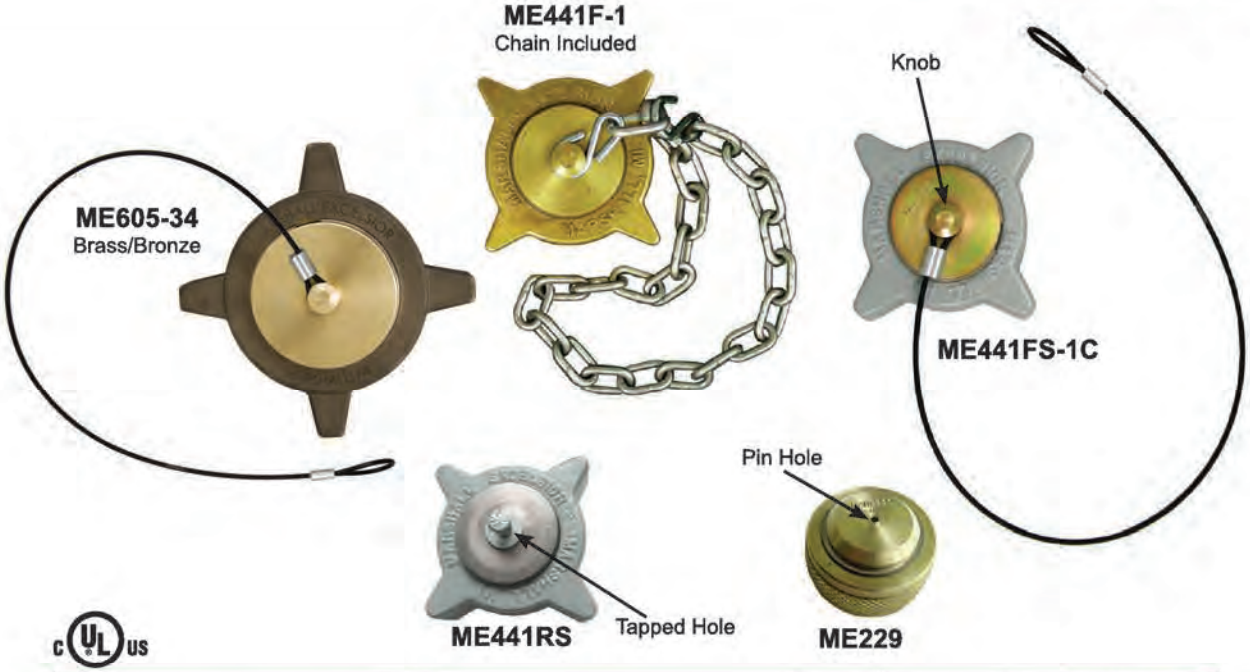

Part No.						F. Acme	Style	Accessories	
Brass			Steel *						
Cap Only	Cap with Chain	Cap with Cable	Cap Only	Cap with Chain	Cap with Cable			Chain Only**	Cable Only
ME229	ME229-1	—	ME229S	ME229S-1	—	1-3/4"	Pin Hole	MEP148	—
ME229F	ME229F-1	ME229F-1C	ME229FS	ME229FS-1	ME229FS-1C	1-3/4"	Knob	MEP167	MEP168
ME431F	ME431F-1	ME431F-1C	ME431FS	ME431FS-1	ME431FS-1C	2-1/4"	Knob	MEP167	MEP168
ME431R	ME431R-1	—	—	—	—	2-1/4"	Tapped Hole	MEP167	—
ME441F	ME441F-1	ME441F-1C	ME441FS	ME441FS-1	ME441FS-1C	3-1/4"	Knob	MEP167	MEP168
ME441R	ME441R-1	—	ME441RS	ME441RS-1	—	3-1/4"	Tapped Hole	MEP167	—
—	—	ME605-34***	—	—	ME625-34***	4-1/4"	Knob	—	MEP168

* Rated for LP-Gas & NH_3 NOTE: Red and Yellow versions available upon request
** MEP147 ring fits over 3/4" MNPT—MEP148 ring fits over 1-1/4" MNPT
*** Not a UL Listed Configuration

ME106

Part No.		F. Acme	Style	Accessory
Plastic				
Cap Only	Cap with Chain			Chain Only**
ME108	ME108-1	1-1/4"	Pin Hole	MEP147
ME109 ME109-NH3*	ME109-1 ME109-NH3-1*	1-3/4"	Pin Hole	MEP148
ME106	ME106-1	3-1/4"	Pin Hole	—

* Rated for N_3
** MEP147 ring fits over 3/4" MNPT—MEP148 ring fits over 1-1/4" MNPT

ME109-NH3

ACME CAPS WITH FLANGE

The flange allows for easy operation of pneumatic or proximity interlock switches which control the safety systems of transport vehicles. The stainless steel flange is flush mounted to the Acme cap.

ME441F8

Part No.						F. Acme	Style	Flange Diameter	Accessory	
Brass			Steel *							
Cap with Flange	Cap with Flange & Chain	Cap with Flange & Cable	Cap with Flange	Cap with Flange & Chain	Cap with Flange & Cable				Chain Only	Cable Only
ME229F5	ME229F5-1	ME229F5-1C	ME229FS5	ME229FS5-1	ME229FS5-1C	1-3/4"	Knob	5"	MEP167	MEP168
ME441F8	ME441F8-1	ME441F8-1C	ME441FS8	ME441FS8-1	ME441FS8-1C	3-1/4"	Knob	8"	MEP167	MEP168
ME441R8	ME441R8-1	—	—	—	—	3-1/4"	Tapped Hole	8"	MEP167	MEP168

* Rated for LP-Gas & NH_3

HEAVY DUTY ACME SPANNER WRENCHES

EZ-Turn Ergonomic Aluminum Acme spanner wrench for 3-1/4" female Acme caps.

MEP120C

Part No.	Length
MEP120C	13-3/4"

MEP120B

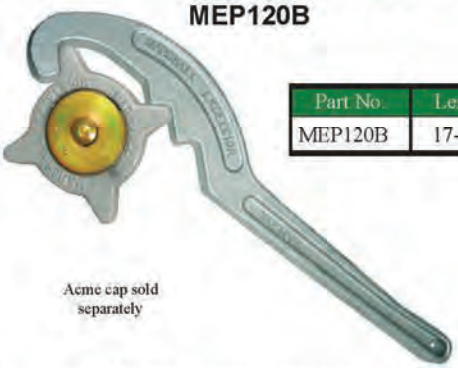

Acme cap sold separately

Part No.	Length
MEP120B	17-1/2"

Aluminum Acme spanner wrench for 1-3/4", 2-1/4", 3-1/4" and 4-1/4" female Acme caps.

J-WRENCH

Aluminum Acme spanner wrench for 3-1/4" Acme caps.

ACME DUST PLUGS

Part No.									M. Acme
Aluminum			Brass			Plastic			
Plug Only	Chain Only*	Plug with Chain	Plug Only	Chain Only*	Plug with Chain	Plug Only	Chain Only*	Plug with Chain	
—	—	—	ME178B	MEP148	ME178B-1	ME178	MEP147	ME178-1	1-1/4"
ME239	MEP148	ME239-1	ME179B	MEP148	ME179B-1	ME179	MEP148	ME179-1	1-3/4"
—	—	—	ME180B	MEP167	ME180B-1	ME180	MEP148	ME180-1	2-1/4"
—	—	—	ME181B	MEP167	ME181B-1	ME181	MEP183	ME181-1	3-1/4"

* MEP147 ring fits over 3/4" MNPT—MEP148 ring fits over 1-1/4" MNP

ME181B

ME179

WHEEL CHOCK

Designed with a "Double Grip" handle for easy carrying and dual traction grips for the road and tire. The cast aluminum construction makes the wheel chock lightweight while still able to withstand the toughest environments. Turn the wheel chock upside down and the points on top of the wheel chock will dig into the snow, ice and mud to prevent sliding. Durable safety yellow powder coat finish.

Part No.	Height	Length	Width
ME200	7"	10"	7"

WHEEL CHOCK BRACKET

Designed to provide a durable and convenient receptacle to store wheel chocks during over-the-road transit. Durable aluminum construction and molded inserts prevent damage to wheel chocks. For installations that require additional mounting clearance a standoff extension kit is available.

ME200BK

Part No.	Height	Length	Depth	Wheel Chocks Included	Accessory
					Standoff Extension Kit
ME200B	7-3/4"	20"	7"	No	ME200EXT
ME200BK	9-3/4"	20"	8"	Yes	

UNIVERSAL UTILITY BRACKET

Provides a safe and secure method to mount and retain hand tools such as shovels, picks, brooms or other equipment for bobtail or utility vehicles during over the road transit.

FEATURES

- Cast aluminum body for maximum durability
- Vinyl coated for maximum security
- All stainless steel spring and mounting hardware

Part No.	Description
MEP082	Universal Spring Loaded Utility Bracket

MEP082

CONTAINER THERMOMETERS

Designed for use in LP-Gas or NH_3 storage tanks, nurse tanks, bobtails and transports. These stainless steel, dust and water proof thermometers feature a 1/2" MNPT connection with a temperature range from –40° to +120° Fahrenheit. Accuracy +/- 1 percent full range.

Part No.	Dial Diameter	Probe Length
MEJ700	2"	4"
MEJ701	2"	6"
MEJ702	3"	4"
MEJ703	3"	6"

PRESSURE GAUGES

Designed to measure the pressure of gas or liquid. Marshall Excelsior offers two types of gauges, dry and glycerin filled. The dry gauge is the most commonly used and least expensive gauge. With a glycerin filled gauge, the life of the gauge is extended, vibration of the pointer is minimized and condensation, caused by humid air inside the gauge, is eliminated.

To determine the correct gauge, environment along with normal operating system pressure must be considered. The pressure range of the gauge should be twice the normal system pressure to maximize gauge life and accuracy.

MEJ502

MEJ513

Back Mount

Bottom Mount

MEJ542

Part No.		PSIG	Dial Size	Fill Type
1/4" MNPT Bottom Mount	1/4" MNPT Back Mount			
MEJ520	—	0-5	2-1/2"	Dry
MEJ500	MEJ510	0-15	2"	Dry
MEJ603LP-01*	—	0-15	2-1/2"	Glycerin
MEJ501	MEJ511	0-30	2"	Dry
ME10BTK-04	—	0-30	2-1/2"	Glycerin
ME50ECO-2	—	0-30" WC	2-1/2"	Dry
MEJ502	MEJ512	0-60	2"	Dry
MEJ503	MEJ513	0-100	2"	Dry
MEJ504	—	0-160	2"	Dry
MEJ505	—	0-200	2"	Dry
MEJ600-02	MEJ516	0-300	2"	Dry
MEJ603HP-01*	—	0-300	2-1/2"	Glycerin
MEJ580***	—	0-300	4"	Dry
MEJ542**	—	0-400	2-1/2"	Glycerin
—	MEJ524*	0-400	2-1/2"	Glycerin
MEJ552*	MEJ526**	0-400	2-1/2"	Glycerin

* Brass Pipe Thread; Stainless Steel Bezel
** Stainless Steel Gauge *** Plated Steel Gauge

PRESSURE GAUGE PROTECTIVE BOOT

Designed to fit over the pressure gauge dial to extend the life and accuracy of dry and liquid pressure gauges. This boot helps protect the dry pressure gauge's fragile internal components and helps prevent dents on liquid pressure gauges which cause the gauge to leak.

Part No.	Fits
MEJ2.5GB	2-1/2" Dial, Bottom Mount Pressure Gauge

Protective Boot

Gauge sold separately

PRESSURE GAUGE SNUBBERS

Designed for a pressure gauge to be threaded into the outlet of the snubber. The snubber will reduce pressure fluctuations that can over pressurize or damage the gauge while maintaining a quick response time and a steady reading.

Part No.	Material	Style	Inlet (MNPT)	Outlet (FNPT)
ME202	Brass	#54 Orifice	1/4"	1/4"
ME202SS	Stainless Steel	#54 Orifice	1/4"	1/4"
ME204	Brass	Sintered Metal Filter Disc	1/4"	1/4"

ME202SS

ME204

THERMAL FUSE PLUGS

MEC fuse plugs are designed to release when exposed to fire ranging from 212-250° F. Ideal for air controlled remote release air operated actuator systems.

Part No.	NTP	Material	Hex	OAL
ME205-013	1/8" MPT	Brass	7/16"	.5906"
ME206-09	3/8" MPT	Brass	3/4"	.75"

ME205-013

SERVICEMAN'S REPLACEMENT SEAL KIT

Designed to provide a convenient storage system for all common LP-Gas and NH_3 gaskets and O-rings. Perfect for dispenser cabinets or bobtail and transport drivers.

FEATURES

- Durable ABS plastic container with storage latch
- Preformed insert with individual spaces for each gasket/O-ring size
- Labeled with each gasket/O-ring size and part number for easy identification and reorder purposes
- All gaskets/O-rings manufactured from UL approved compounds for LP-Gas and NH_3 services

MEW1

MEW1—Serviceman's Replacement Seal Kit Includes:	Qty	Replacement Part No.
1-1/4" Acme Motor Fuel Flat Gasket	9	**MEW4**
1-1/4" Acme Flat Gasket	10	**MEW3**
1-3/4" Acme Flat Gasket	10	**MEW2**
2-1/4" Acme Flat Gasket	10	**MEW5**
3-1/4" Acme Flat Gasket	10	**MEW6**
Male Motor Fuel Connector O-ring	12	**ME220M-02**
POL O-ring	12	**568-110-01**

MEW1 Layout

HOSE REEL CONTROL SWITCH COVERS

These covers are intended to protect Hannay® Hose Reel Control Switches from moisture and/or other contaminants during over-the-road transit. The MEPGMC1 is specifically designed to fit Hannay® Guidemaster® control switches while the MEPRDC1 is specifically designed to fit Hannay® red DOT EPS style control switches. Both of these covers fit snuggly over the control to help prevent damage due to moisture or other contaminants thereby increasing the longevity of the control switch.

FEATURES

- Made with durable UV stable black low temperature EPDM material
- Includes security lanyard to help prevent loss of the cap
- Fits Hannay® Guidemaster® and red DOT EPS switches
- Control switch can be operated through cover without removing

MEPGMC1

MEPRDC1

Part No.	Description	Material
MEPGMC1	Hose Reel Control Switch Cover for Guidemaster® Control Arm	Black EPDM
MEPRDC1	Hose Reel Control Switch Cover for Red DOT EPS	Black EPDM

"Hannay®" and "Guidemaster®" are trademarks of Hannay Reels

NEEDLE VALVES

Intended for application where precise control of gas output is required. These precision machined valves offer a wide range of adjustment without stem galling. Perfect for isolating pressure gauges from bulk storage containers or upstream shutoff valves for torches and/ or outdoor burner applications.

FEATURES

- Available in brass, plated steel & stainless steel construction
- Tapered valve body seat & stem for precision accuracy
- Various inlet / outlet configurations available
- ME831 & ME834 series valves approved for bi-directional flow

ME831S

ME832

Part No.	Description	Material
ME831	Needle Valve 1/4" MNPT x 1/4" FNPT	Brass
ME832	Needle Valve 1/4" MNPT Outlet x #80 Orifice 1"- 20 F. Inlet	Brass
ME833	Needle Valve 1/4" MNPT Outlet x 1"- 20 F. Inlet	Brass
ME834	Needle Valve 1/4" MNPT x 9/16" -18 LH Male	Brass
ME831S	Needle Valve 1/4" MNPT x 1/4" FNPT	Plated Steel
ME831SS	Needle Valve 1/4" MNPT x 1/4" FNPT	Stainless Steel

LED 12V LIGHT STRIP

Universal LED Light Strip can be installed anywhere to provide extra lighting right where you need it.

FEATURES

- Bright White LED
- Pre-Applied 3M Adhesive backing for easy installation
- Can be cut to any length

Part No.	Description
MEP104-95	LED Light Strip

VENT VALVES

Marshall Excelsior is the only manufacturer in the industry that offers three types of vent valves—**Low Emission, Self-Cleaning Low Emission**, and **Standard Vent Valves**. All the vent valves below are designed to minimize loss of product while allowing the operator to effectively bleed down connections and detect liquid levels while filling containers. Vent valves provide an effective means to verify valves have closed in the transfer system when installed into the downstream auxiliary port on the Marshall Excelsior globe and angle valves. Opening the vent valve until liquid or vapor stops venting indicates it is safe to disconnect.

All brass versions have knurled stems that completely unscrew from the valve making the stems replaceable. The stainless steel version has a t-handle stem that is non-removable.

The **Low Emission Vent Valve** and the **Self-Cleaning Low Emission Vent Valve** reduce emissions by **70 Percent** during normal container filling operations. The **Self-Cleaning Low Emission Vent Valve** cleans out the orifice hole each time it is operated. The hole is cleaned out with a #54 orifice drill that reams the valve's orifice hole each time the adjusting screw is loosened or tightened, eliminating nuisance orifice clogging. The reduced venting emissions is achieved by forcing product to pass between the #54 orifice hole and the flutes of the captured self-cleaning apparatus. The self-cleaning replacement screw (MEJ401SC) is compatible with all existing standard vent valve bodies allowing a standard vent valve to be converted into a self-cleaning low emission vent valve without reinstalling the valve body.

The **Standard Vent Valve** has a #54 orifice with no self-cleaning apparatus

The **Low Emission Vent Valve** has a #72 orifice.

FEATURES

- 70% emission reduction with our Self-Cleaning and Low Emission vent valves
- 1/4" MNPT Connection
- Available with dip tubes. See fixed maximum liquid level gauges

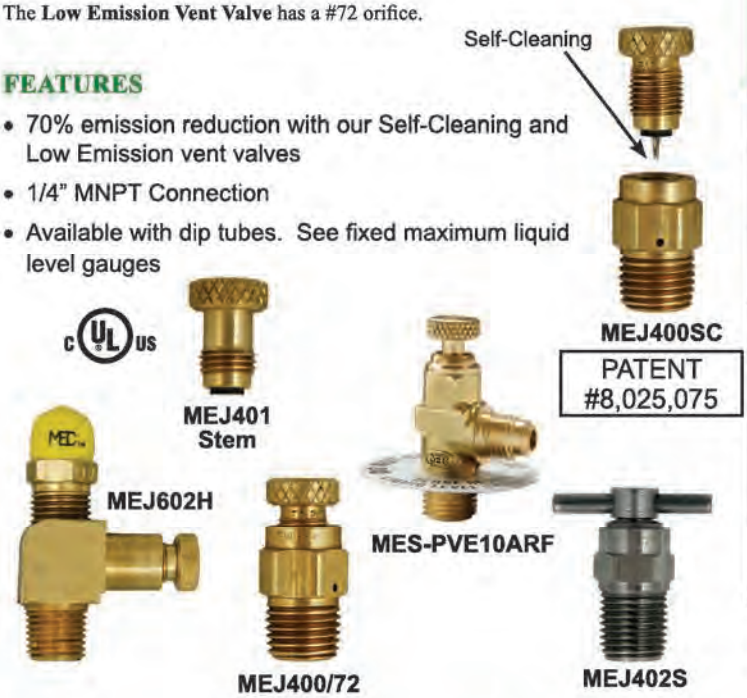

Type	Part No.		
	Brass	Brass Replacement Stems	Stainless Steel[1]
Low Emission #72 Orifice	MEJ400/72	MEJ401	—
Self-Cleaning Low Emission #54 Orifice	MEJ400SC	MEJ401SC	—
Standard #54 Orifice	MEJ400	MEJ401 MEJ401SC	MEJ402S [2]
Standard #54 Orifice	MEJ400C [2]	—	—
90° Elbow w/ Hydrostatic Relief	MEJ602H [3]	—	—
90° Elbow 1/4" MPT x 1/4" M. Flare	MEJ606	MEJ400 MEJ401 MEJ401SC	—
1/4" MNPT X 1/4" M. Flare	MES-PVE10ARF [2]	—	—

(1) Rated for LP-Gas & NH_3
(2) Includes captured stem
(3) Factory installed hydrostatic relief valve

FIXED MAXIMUM LIQUID LEVEL GAUGES

Designed to provide a way to visually determine that a tank has reached maximum allowable fill capacity. The dip tube end of a fixed liquid level gauge should be set equal to 80% of the liquid level tank capacity and installed in the vapor space of the tank. The vent valve should be opened before filling begins during which time vapor will be discharged. Once the tank reaches maximum liquid fill capacity (80% of tank capacity), liquid will begin to discharge from the vent valve telling the operator the tank has reached maximum allowable fill capacity and the filling operation should cease immediately.

Type	Part No.					
	5.4" Tube Length Brass	5.7" Tube Length Brass	6.6" Tube Length Brass	6.9" Tube Length Brass	12" Tube Length Brass	12" Tube Length Stainless Steel[1]
Low Emission #72 Orifice	MEJ410/72-5.4	MEJ410/72-5.7	MEJ410/72-6.6	MEJ410/72-6.9	MEJ410/72-120	—
Self-Cleaning Low Emission #54 Orifice	MEJ410SC-5.4	MEJ410SC-5.7	MEJ410SC-6.6	MEJ410SC-6.9	MEJ410SC-120	—
#54 Orifice	MEJ410-5.4	MEJ410-5.7	MEJ410-6.6	MEJ410-6.9	MEJ410-120	MEJ402S-120 [2]
Captured Stem #54 Orifice	MEJ410C-5.4[2]	MEJ410C-5.7	MEJ410C-6.6	MEJ410C-6.9	MEJ410C-120	—

(1) Rated for LP-Gas & NH_3
(2) Includes captured stem

LIQUID TRANSFER VALVES

Designed to provide a safe means to transfer liquid or vapor from a storage container. ME449 Series valves can be directly installed for full time use in the liquid or vapor port of the storage container when configured with an integral excess flow check (ME449EXS Series, ME449X/19.5), or when utilized in conjunction with a Liquid Withdrawal Tank Valve with integral excess flow protection (ME460 or ME462 Series) and the appropriate Liquid Withdrawal Adapter (ME458 Series).

These valves can also be used for temporary liquid withdrawal applications such as emergency evacuations or container relocation, when utilized in conjunction with a Liquid Withdrawal Tank Valve featuring integral excess flow protection (ME460 or ME462 Series) installed directly into a container liquid withdrawal port and the appropriate Liquid Withdrawal Adapter (ME458 Series) installed onto the ME449 Series Liquid Withdrawal Transfer Valve connected to the delivery truck or service truck transfer hose.

Opening Liquid Withdrawal Tank Valve

1. Slowly loosen cap to release any trapped LP-Gas thru relief hole. Remove the cap when venting stops. In case of a leak and venting does not stop, retighten the cap and use another approved method to withdraw the liquid. *When loosening the cap make sure the valve is not unthreading from the tank. Use two wrenches, if necessary, to secure the valve to the tank.*

2. The Liquid Transfer Shutoff Valve must be in the open position and securely attached to the Liquid Withdrawal Adapter before connecting to the Liquid Withdrawal Tank Valve.

3. Once the Shutoff Valve Assembly is tightly attached to the Tank Valve, close the Shutoff Valve Assembly. A popping sound actuating the Tank Valve will occur while closing the Shutoff Valve Assembly allowing the flow to be controlled by the Shutoff Assembly. *If the Tank Valve does not open after following steps 1-3, increase pressure downstream (Shutoff Valve side) to equalize pressure in the Tank Valve.*

4. Use Marshall Excelsior Leak Detector to check for leaks between each connection.

Closing Liquid Withdrawal Tank Valve

1. To shut the Tank Valve pressure in the tank must exceed 35 psig. Close the Shutoff Valve Assembly and disconnect the hose or piping.

2. Slowly open the Shutoff Valve Assembly to release any LP-Gas in the valve. If the tank pressure exceeds 35 psig the LP-Gas released to the air will cause the excess flow feature to close on the Tank Valve. If the Tank Valve does not completely shut, close the Shutoff Valve Assembly immediately. The Shutoff Valve Assembly must remain connected until all the LP-Gas can be removed and the container repaired.

3. After the Tank Valve excess flow feature has closed remove the Shutoff Valve Assembly. When disconnecting the assembly make sure the Tank Valve is not unthreading from the tank. Use two wrenches, if necessary, to secure the valve to the tank. Note: A small amount of bypass may occur through the excess flow check. Use caution when removing the Shutoff Valve Assembly.

4. Clean the top surface of the Tank Valve and place Tank Valve Cap back onto Tank Valve ensuring cap gasket is in place. Make sure the Tank Cap is placed tightly onto the Tank Valve.

NOTE: Always use an adapter between the liquid transfer valve (ME449 Series) and the liquid withdrawal valve. Extreme care must be used whenever liquid transfer of LP-Gas is in progress. Only persons trained in the proper method of transfer should attempt this type of operation. Reference NFPA #58 Liquefied Petroleum Gas Code Chapter 7, LP-Gas Liquid Transfer for additional information.

Liquid Transfer Shutoff Valve
ME449
ME449S

Liquid Withdrawal Adapter
ME458
ME458S

Liquid Withdrawal Tank Valve
ME462
ME462S
ME462SS
ME461 Series Cap included

Liquid Withdrawal Tank Valve Cap
ME461

LIQUID TRANSFER VALVES & ADAPTERS

Designed to provide a safe means to transfer liquid or vapor from a storage container. ME449 Series valves can be directly installed for full time use in the liquid or vapor port of the storage container when configured with an integral excess flow check (ME449EXS Series, ME449X/19.5), or when utilized in conjunction with a Liquid Withdrawal Tank Valve with integral excess flow protection (ME460 or ME462 Series) and the appropriate Liquid Withdrawal Adapter (ME458 Series).

These valves can also be used for temporary liquid withdrawal applications such as emergency evacuations or container relocation, when utilized in conjunction with a Liquid Withdrawal Tank Valve featuring integral excess flow protection (ME460 or ME462 Series) installed directly into a container liquid withdrawal port and the appropriate Liquid Withdrawal Adapter (ME458 Series) installed onto the ME449 Series Liquid Withdrawal Transfer Valve connected to the delivery truck or service truck transfer hose.

WARNING: An excess flow valve will not activate if there is a break or leak downstream of the valve that does not equal or exceed the closing flow of the valve or if the excess flow valve installed exceeds the flow capacity of the system. **See the Excess Flow Warning page for more information regarding the use of excess flow devices.**

LIQUID TRANSFER VALVE FEATURES

- Double O-ring stem seal design ensures leak free operation
- Double lead stem thread ensures quick and efficient operation
- 3/4" MNPT inlet x 3/4" FNPT outlet
- Additional features for steel transfer valves
  - All stainless steel internal components
  - Durable ductile iron valve body with automotive grade powder coat finish
  - Equipped with convenient upstream and downstream 1/4" FNPT plugged ports for optional accessories

ME462S

ME450

ME449EXS/22

MEP449S-101 Replacement Protective Weather Boot

TANK VALVE FEATURES

- Provides excess flow protection in the event of a downstream connection or line failure
- Safety breakaway feature leaves valve seals intact in the event of truck roll-away
- 6-14 psig closing flow pressure differential for maximum product transfer
- Fully interchangeable with all existing valve models and adapters
- Additional features for steel and stainless steel tank valves
  - Meets requirements for installation into DOT storage containers like bobtails and transports
  - Steel model features a rust inhibitor compound between the cap and body threads to prevent corrosion

ME449X-110-KIT

ME449X/19.5

Part No.	Material	Excess Flow	Closing Flow/ GPM	Accessories								
				Liquid Withdrawal Adapter 3/4" FNPT x 1-5/8" UNF		Liquid Withdrawal Tank Valve 1-5/8" UNF Male				Hydrostatic Relief Valve	Vent Valve	Excess Flow Check Valve
						3/4" MNPT	1-1/4" MNPT					
				Brass	Steel*	Brass	Brass	Steel*	Stainless Steel*			
ME449	Brass	No	—	ME458	ME458S	ME460 (3)	ME462 (3)	—	—	MEH225 MEH25/450	MEJ400 MEJ400SC MEJ400/72 MEJ402S	ME449X-110-KIT
ME449H	Brass	No	—	ME458	ME458S	—	—	—	—	Factory Installed MEH225		
ME449S	Ductile Iron (1)	No	—	—	ME458S	—	—	ME462S (3)	ME462SS (3)	MEH225SS/350 MEH225SS/400 MEH225SS/440		—
ME449EXS/22	Ductile Iron (1)	Yes	22	—	—	—	—	—	—			—
ME449EXS/28	Ductile Iron (1)	Yes	28	—	—	—	—	—	—			—
ME449X/19.5	Brass	Yes	19.5									ME449X-110-KIT
ME450 (2)	Brass	No	—	—	—	ME601-6	ME601-10	—	—			—

(1) Rated for LP-Gas & NH_3 (2) MEJ400 Vent Valve Factory Installed (3) Includes an excess flow feature (ME460 = 21 GPM / ME462 = 36 GPM)

LIQUID TRANSFER ADAPTERS

Designed for use between the liquid transfer shutoff valve and the liquid withdrawal tank valve. These adapters enable the tank valve to open properly and allows a tight seal when transferring liquid. Special threads on the tank valve and the adapter help eliminate tampering.

The ME458 Series fits all new underwriters laboratories listed valves. The ME453 and ME455 fit older style liquid withdrawal tank valves that are still in service and have not been replaced. They will not provide a positive seal during actuation of liquid withdrawal tank valve until fully seated.

Part No.	Material	Inlet Connection	Outlet Connection
ME458	Brass	1-5/8" UNF	3/4" FNPT
ME458S*	Steel	1-5/8" UNF	3/4" FNPT
ME453	Brass	3/4" NGT	3/4" FNPT
ME455	Brass	3/4" NGT	3/4" MNPT
* Rated for LP-Gas & NH_3			

ME453

ME455

ME458

COMBINATION VALVES

Developed to mount a pressure gauge and fixed tube liquid level gauge all in one valve. The shutoff portion of the valve increases the pressure gauge's life and accuracy by eliminating constant gauge pressure and allows for easy gauge replacement. To replace a gauge simply close the valve and open the vent valve to relieve pressure before disassembling pressure gauge.

The valve can be installed at the maximum fill level or an 1/8" MNPT dip tube can be installed on the container connection side to set any liquid level desired. For use in ASME bulk storage containers and DOT transport tank installations.

c UL us

For LP-Gas & NH_3

ME830

MEP449S-101
Replacement Protective Weather Boot

FEATURES

- All steel and stainless steel component construction
- Integral #54 orifice provides gauge dampening protection
- Durable ductile iron body with automotive grade powder coat finish or plated steel body

MEJ415G

MEJ415

Part No.	Material	Container Connection MNPT	Two Service Connections FNPT	Dip Tube Connection FNPT	Accessories	
					Stainless Steel Vent Valve	Stainless Steel 0-400 PSIG Pressure Gauge
ME830	Ductile Iron	3/4" MNPT	1/4" FNPT	1/8"	Included	MEJ526 MEJ542
MEJ415	Steel	3/4" MNPT	1/4" FNPT	1/8"	MEJ402S	MEJ542
MEJ415G	Steel	3/4" MNPT	1/4" FNPT	1/8"	Included	Included

LIFT TRUCK FLOAT GAUGE

for DOT HORIZONTAL or VERTICAL TANK ORIENTATION

MES1284-001U
Lift Truck Float Gauge
(Junior Head Mounting)

- 1-1/4" NPT or junior head mounting
- Refer to ordering information for correct gauge
- Junior mounting head includes gasket

MES2284-001U
Lift Truck Float Gauge
(1-1/4 NPT Mounting)

FEATURES

- Solid brass mounting head **LPG SERVICE ONLY**
- Ultra low friction, smooth acting, non-jamming gear design
- Hermetically sealed, easy to read dial
- Teflon® coated, free-floating shaft
- Solid float; no metal shell to corrode or leak
- Pre-applied thread sealant on NPT versions

Part No.	Propane Capacity and Mounting Style	Nominal Cylinder Diameter	Gauge Head Style	Replacement Dial w/ 2 Mounting Screws
MES1284-001U	33-1/2 lb. universal	12"	Junior Brass Head	MES1284-001K
MES2184-001U	33-1/2 lb. universal	12"	Threaded 3/4" NPT Brass Head	MES2184-001K
MES2284-001U	33-1/2 lb. universal	12"	Threaded 1-1/4" NPT Brass Head	MES1284-001K

1" NPT ABOVE GROUND FLOAT GAUGES

for ASME ABOVE GROUND HORIZONTAL DOMESTIC TANKS & DOT CYLINDERS

MES3981 Series
1" NPT AG Float Gauges

- REMOTE READY
- 1" NPT mounting
- Refer to ordering information for correct size gauge
- For various size tanks

TYPICAL GAUGE SIZING GUIDE

TANK	
120 Gallon	24" diameter
250/350 Gallon	30" diameter
500 Gallon	37" diameter
1000 Gallon	41" diameter

FEATURES

- Solid brass mounting head **LPG SERVICE ONLY**
- Ultra low friction, smooth acting, non-jamming gear design
- Hermetically sealed, easy to read dial
- Teflon® coated, free-floating shaft
- Solid float; no metal shell to corrode or leak

Part No.	Container Capacity (Gallons of Water)	Nominal Cylinder Diameter	Gauge Head Style	Remote Ready Replacement Dial w/ 2 Mounting Screws	Standard Replacement Dial w/ 2 Mounting Screws
MES3981-002R	120	24"	Threaded 1" NPT Brass Head	MES1284-002RK	MES1284-002K
	150				
MES3981-003R	200	30"	Threaded 1" NPT Brass Head	MES1284-002RK	MES1284-002K
	250				
	325				
MES3981-004R	500	37"	Threaded 1" NPT Brass Head	MES1284002RK	MES1284-002K
MES3981-005R	1000	41"	Threaded 1" NPT Brass Head	MES1284-002RK	MES1284-002K
MES3981-001R*	420# vertical	30"	Threaded 1" NPT Brass Head	MES1284-003RK (% of total volume)	MES1284-003K (% of total volume)

1-1/4" ABOVE GROUND FLOAT GAUGES

for ABOVE GROUND HORIZONTAL DOMESTIC TANKS

- REMOTE READY
- 1-1/4" NPT mounting
- Refer to ordering information for correct size gauge
- For various size tanks

TYPICAL GAUGE SIZING GUIDE

TANK	
120 Gallon	24" diameter
250/350 Gallon	30" diameter
500 Gallon	37" diameter
1000 Gallon	41" diameter

MES2281 Series

FEATURES

- Solid brass mounting head **LPG SERVICE ONLY**
- Ultra low friction, smooth acting, non-jamming gear design
- Hermetically sealed, easy to read dial
- Teflon® coated, free-floating shaft
- Solid float; no metal shell to corrode or leak

Part No.	Container Capacity (Gallons of Water)	Nominal Cylinder Diameter	Gauge Head Style	Remote Ready Replacement Dial w/ 2 Mounting Screws	Standard Replacement Dial w/ 2 Mounting Screws
MES2281-001R	120	24"	Threaded 1-1/4" NPT Brass Head	MES1284-002RK	MES1284-002K
	150				
MES2281-002R	200	30"	Threaded 1-1/4" NPT Brass Head	MES1284-002RK	MES1284-002K
	250				
	325				
MES2281-003R	500	37"	Threaded 1-1/4" NPT Brass Head	MES1284-002RK	MES1284-002K
MES2281-004R	1000	41"	Threaded 1-1/4" NPT Brass Head	MES1284-002RK	MES1284-002K

JUNIOR ABOVE GROUND FLOAT GAUGES

for ASME ABOVE GROUND HORIZONTAL DOMESTIC TANKS

MES1280 SERIES

TYPICAL GAUGE SIZING GUIDE

TANK	
120 Gallon	24" diameter
250/350 Gallon	30" diameter
500 Gallon	37" diameter
1000 Gallon	41" diameter

FEATURES

- Solid brass mounting head **LPG SERVICE ONLY**
- Ultra low friction, smooth acting, non-jamming gear design
- Hermetically sealed, easy to read dial
- Teflon® coated, free-floating shaft
- Solid float; no metal shell to corrode or leak
- Standard with remote ready dial

Part No.	Container Capacity (Gallons of Water)	Nominal Cylinder Diameter	Remote Ready Replacement Dial w/ 2 Mounting Screws	Standard Replacement Dial w/ 2 Mounting Screws
MES1280-001R	120	24"	MES1284-002RK	MES1284-002K
	150			
MES1280-002R	200	30"	MES1284-002RK	MES1284-002K
	250			
	325			
MES1280-003R	500	37"	MES1284-002RK	MES1284-002K
MES1280-004R	1000	41"	MES1284-002RK	MES1284-002K
MES1280-005R	1999	47"	MES1284-002RK	MES1284-002K
MES1280-006R	2000	52"	MES1284-002RK	MES1284-002K

- REMOTE READY
- Brass junior head mounting
- Refer to ordering information for correct size gauge
- Gasket included

JUNIOR UNDERGROUND FLOAT GAUGES

for UNDERGROUND HORIZONTAL DOMESTIC TANKS

- REMOTE READY
- Brass junior head mounting
- Refer to ordering information for correct size gauge
- Gauge included

TYPICAL GAUGE SIZING GUIDE

TANK	
120 Gallon	24" diameter
250/350 Gallon	30" diameter
500 Gallon	37" diameter
1000 Gallon	41" diameter

MES1281 SERIES
Junior UG Float Gauges

FEATURES

- Solid brass mounting head **LPG SERVICE ONLY**
- Ultra low friction, smooth acting, non-jamming gear design
- Hermetically sealed, easy to read dial
- Teflon® coated, free-floating shaft
- Solid float; no metal shell to corrode or leak

Part No.	Container Capacity (Gallons of Water)	Nominal Cylinder Diameter	Gauge Head Style	Gauge Riser Lengths	Remote Ready Replacement Dial w/ 2 Mounting Screws	Standard Replacement Dial w/ 2 Mounting Screws
MES1281-001R	120	24"	Junior brass head	8-1/2"	MES1284-002RK	MES1284-002K
	150					
MES1281-002R	200	30"		8-1/2"	MES1284-002RK	MES1284-002K
	250					
	325					
MES1281-003R	500	37"		8-1/2"	MES1284-002RK	MES1284-002K
MES1281-004R	1000	41"		8-1/2"	MES1284-002RK	MES1284-002K
MES1281-005R	120	24"		15-1/2"	MES1284-002RK	MES1284-002K
	150					
MES1281-006R	200	30"		15-1/2"	MES1284-002RK	MES1284-002K
	250					
	325					
MES1281-007R	500	37"		15-1/2"	MES1284-002RK	MES1284-002K

ACCU-MAX™ FLOAT GAUGES

HORIZONTAL MOUNT SERIES

ME930-72

Designed to measure liquid levels within horizontal DOT and Stationary ASME Tanks with fluid capacities above 2,300 gallons. For maximum gauge life, the float arm features an integral spring loaded shock absorber for harsh over-the-road applications. The standard dial face features a black background for reduced glare with glow technology providing an easy to read "glow in the dark" dial face, perfect for low light situations. An optional classical style dial face is available. These gauges are suitable for use in bobtail, transport, railcar and bulk storage applications.

NOTE: These gauges must be installed on the centerline of the tank's side or end for accurate readings.

Part No.	Type	Style	Dial Face	Dial Size	Tank Diameter
ME930-72	DOT	Standard	Glow/Black	4"	72"
ME930-79	DOT	Standard	Glow/Black	4"	79"
ME930-84	DOT	Standard	Glow/Black	4"	84"
ME930C-72	DOT	Classic	Silver/Black	4"	72"
ME930C-79	DOT	Classic	Silver/Black	4"	79"
ME930C-84	DOT	Classic	Silver/Black	4"	84"
ME940-108	ASME	Standard	Glow/Black	8"	108"
ME940-130	ASME	Standard	Glow/Black	8"	130"
ME940C-108	ASME	Classic	Silver/Black	8"	108"
ME940C-130	ASME	Classic	Silver/Black	8"	130"

Accu-Max™ Limited Warranty: Marshall Excelsior warrants Accu-Max™ float gauges and repair kits to the original buyer to be free of defects in material and workmanship under normal service and use for two years from manufactured date.

FEATURES

- All stainless steel construction
- Welded tube to coupling design for maximum strength and durability
- Dial face 100% sealed and argon filled to prevent moisture build-up & fogging
- Factory set and precision tuned for superb accuracy
- Dial face and mounting hardware universal with other industry standard gauges
- Mounts to all standard 8 bolt tank flange adapters
- **Custom length tank configurations available upon request for 30" to 300" I.D. tank**

PATENT
#D671,022
#D666,933

c UL us
For LP-Gas & NH_3

"Glow" Technology
Standard Dial

ME940 ASME Series / 8" Dial
Shown as Standard "Glow" Dial

ME930C DOT Series / 4" Dial
Shown as Classic Dial

ACCU-MAX™ FLOAT GAUGE ACCESSORIES

Designed for mounting float gauges in DOT or ASME tanks. These zinc plated steel 8 bolt mounting flanges feature 1/2"-13 threads for easy installation.

Made in the U.S.A.

ME931

ME932

Part No.	Connection	Connection	Installation Tool
ME931	2-1/2" MNPT	1/2"-13 Female	MEP930WG
ME932*	Weld	1/2"-13 Female	—

*Weld flanges supplied with material certification

TOP MOUNT SERIES

Measure liquid levels within horizontal Stationary ASME Tanks with fluid capacities above 2,300 gallons. Suitable for use in bulk storage vessels equipped with either 2-1/2" NPT 6000 lb. or 8 bolt 3-1/2" on center tank openings located on the top of the vessel such as underground or buried applications.

ME930TM
ASME Series
4" Dial

ME940TM
ASME Series
8" Dial

FEATURES:

- All stainless steel construction for use with LPG & NH3 applications
- Welded tube to coupling design for maximum strength and durability
- Integral spring loaded shock absorber
- Exclusive easy to read "glow in the dark" dial face perfect for low light situations
- Dial face 100% sealed and argon filled to prevent moisture build-up & fogging factory set and precision tuned for superb accuracy
- Dial face and mounting hardware universal with other industry standard gauges
- Mounts to all standard 8 bolt tank flange adapters
- **Custom configurations available upon request**
- Available with classic style dial face

Part No.	Description	Dial Face	Dial Size	Riser	Tank Diameter	Accessories
ME930TM4-108-5946	Accu-Max Stationary ASME Top Mount Gauge	Glow/ Black *	4"	4"	108"	ME931 2-1/2" MNPT Flange Adapter ME932 Weld Type Flange Adapter
ME930TM8-108-6346			4"	8"	108"	
ME930TM4-130-7056			4"	4"	130"	
ME930TM8-130-7456			4"	8"	130"	
ME940TM4-108-5948			8"	4"	108"	
ME940TM8-108-6348			8"	8"	108"	
ME940TM4-130-7060			8"	4"	130"	
ME940TM8-130-7460			8"	8"	130"	

* To order with classic (silver/black) dial face add "C" for Classic after the prefix part number, i.e. ME930TMC-108-6346
NOTE: Custom configurations available upon request

ACCU-MAX™ FLOAT GAUGES

TRANS-MAX SERIES

Measure liquid levels within horizontal DOT and Stationary ASME Tanks with 1" FNPT tank gauge port openings. Designed to replace rotary style gauges in tanks with fluid capacities greater than 2,300 gallons. Suitable for use in bobtail, transport, and bulk storage applications. MEC exclusive "wedge" design allows for easy installation while greatly reducing time spent inside the vessel.

NOTE: The heavy duty design of this gauge requires entering vessel through man-way during installation.

ME930WG DOT Series
ME940WG ASME Series

Made in the U.S.A.

U.S. PATENT #9,562,800

FEATURES

- All stainless steel construction for use with LPG & NH_3 applications
- Welded tube to coupling design for maximum strength and durability
- Installation requires man-way
- Converts rotary style gauge to heavy duty Accu-Max style for both mobile & stationary applications
- Integral spring loaded shock absorber for arduous over-the-road application
- Easy to assemble
- Exclusive easy to read "glow in the dark" dial face perfect for low light situations
- Dial face 100% sealed and argon filled to prevent moisture build-up & fogging
- Factory set and precision tuned for superb accuracy
- Dial face and mounting hardware universal with other industry standard gauges
- Mounts to all standard 1" NPT tank coupling adapters
- **Custom lengths available upon request**
- Available with classic style dial face

MEP930WG

*Sold seperately but highly recommended

Trans-Max Accu-Max DOT Float Gauges					
Part No.	Description	Dial Face	Dial Size	Tank Diameter	Accessories
ME930WG-72	Trans-Max Accu-Max DOT Float Gauge Assembly	Glow/Black	4"	72"	MEP930WG Zinc Plated Installation Tool
ME930WG-79	Trans-Max Accu-Max DOT Float Gauge Assembly		4"	79"	
ME930WG-84	Trans-Max Accu-Max DOT Float Gauge Assembly		4"	84"	
ME930CWG-72	Trans-Max Accu-Max DOT Float Gauge Assembly (Classic)	Silver/Black	4"	72"	
ME930CWG-79	Trans-Max Accu-Max DOT Float Gauge Assembly (Classic)		4"	79"	
ME930CWG-84	Trans-Max Accu-Max DOT Float Gauge Assembly (Classic)		4"	84"	

Trans-Max Accu-Max ASME Stationary Float Gauges					
Part No.	Description	Dial Face	Dial Size	Tank Diameter	Accessories
ME940WG-108	Trans-Max Accu-Max Stationary Float Gauge Assembly	Glow/Black	8"	108"	MEP930WG Zinc Plated Installation Tool
ME940WG-130	Trans-Max Accu-Max Stationary Float Gauge Assembly		8"	130"	
ME940CWG-108	Trans-Max Accu-Max Stationary Float Gauge Assembly (Classic)	Silver/Black	8"	108"	
ME940CWG-130	Trans-Max Accu-Max Stationary Float Gauge Assembly (Classic)		8"	130"	

INSPECTION

A pressure relief valve discharges when some extraordinary circumstance causes an over pressure condition in the container. If a pressure relief valve is known to have discharged, the relief valve, as well as the entire system, should be immediately and thoroughly inspected to determine the reason for the discharge. In the case of discharge due to fire, the valve should be removed from service and replaced.

Relief valves should be inspected each time the container is filled but no less than once a year. If there is any doubt about the condition of the valve, it must be replaced.

WARNING: ***Eye protection must be worn when performing inspection on relief valves under pressure. Never look directly into a relief valve under pressure or place any part of your body where the relief valve discharge could impact it. In some cases a flashlight and small mirror are suggested to assist when making visual inspections.***

In the case of a pressure relief valve that has opened due to a pressure beyond its start-to-discharge setting, the chances of foreign material lodging between the seat and the disc is low, however the possibility is always present. If the relief valve continues to leak at pressure below its start-to-discharge setting it must be replaced.

If there is any doubt about the condition of the relief valve, or if the relief valve has not been protected by a cap for some time, it should be replaced before refilling the container.

Inspection Checklist:

1. **Cap**: Check that the protective cap is in place over the valve or pipeaway stack outlet and has a snug fit. The protective cap helps protect the relief valve against possible malfunction caused by rain, sleet, snow, ice, sand, dirt, pebbles, insects, other debris and contamination. Replace damaged or missing caps at once and keep a cap in place at all times.
2. **Weep Holes**: Inspect and clear debris from the relief valve weep holes. Dirt, ice, paint, and other foreign particles can prevent proper drainage from the valve body. If the weep holes cannot be cleared, replace the valve.
3. **Relief Valve Spring**: Exposure to high concentrations of water, salt, industrial pollutants, chemicals and contaminants could cause metal parts to fail including the relief valve spring. If the coating on the relief valve spring is cracked or chipped, replace the valve.
4. **Physical Damage**: Ice accumulations and improper installation could cause mechanical damage. If there are any indications of damage, replace the valve.
5. **Tampering or Readjustment**: Pressure relief valves are factory set to discharge at specified pressures. If there are any indications of tampering or readjusting, replace the valve.
6. **Seat Leakage**: Check for leaks in the seating area using Marshall Excelsior leak detector solution. If there is any indication of leakage, replace the valve. Never force a relief valve closed and continue to leave it in service. This could result in damage to the valve and possible rupture of the container or piping on which the valve is installed.
7. **Corrosion**: Replace the valve if there are any signs of corrosion or contamination.
8. **Moisture, Foreign Particles or Contaminants in the Valve:** Foreign material such as paint, tar or ice in relief valve parts can impair the proper functioning of the valves. Grease placed in the valve body may harden over time or collect contaminants, thereby impairing the proper operation of the relief valve. Do not place grease in the valve body; replace the valve if there are any indications of moisture or foreign matter in the valve.
9. **Corrosion or Leakage at Container Connection**: Check container to valve connection using Marshall Excelsior leak detector solution. Replace the valve if there is any indication of corrosion or leakage at the connection between the valve and container.

CAUTION: Never plug the outlet of a pressure relief valve. Any device used to stop the flow of a properly operating pressure relief valve that is venting an over pressurized container can cause severe consequences.

PRODUCT AGE

To determine the product's age, check the product for a date code consisting of a series of letters and numbers.

Full Internal Relief Valves (FIR)

Semi Internal Relief Valves (SIR) & External Relief Valves

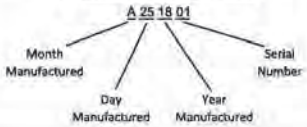

OPERATION OF PRESSURE RELIEF VALVES

Pressure relief valves are set and sealed by the manufacturer to function at a specific "start-to-discharge" pressure in accordance with UL 132. This set pressure is marked on the relief valve and depends on the design requirement of the container to be protected by the relief valve. If the container pressure reaches the start-to-discharge pressure, the relief valve will open a slight amount as the seat disc begins to move slightly away from the seat. If the pressure continues to rise despite the initial discharge through the relief valve, the seat disc will move to a full open position with a sudden "pop". This popping sound is from which the term "pop-action" is derived.

Whether the relief valve opens a slight amount or pops wide open, it will start to close if the pressure in the container diminishes. After the pressure has decreased sufficiently, the relief valve spring will force the seat disc against the seat tightly enough to prevent any further escape of product. The pressure at which the valve closes tightly is referred to as the "re-seal" or "blow-down" pressure. Generally, the re-seal pressure will be lower than the start-to-discharge pressure.

Requirements for Pressure Relief Valves

Every container used for storing or hauling LP-Gas and NH_3 must be protected by a pressure relief valve. These valves are designed to protect the container against the development of hazardous conditions which might be created by any of the following:

- High pressures resulting from exposure of the container to excessive external heat.
- High pressures due to the use of incorrect fuel.
- High pressures due to improper purging of the container.

Consult NFPA #58 for LP-Gas and ANSI #K61.1 for NH_3, and/or any applicable local and state regulations governing the application and use of pressure relief valves.

Selection of MEC Pressure Relief Valves for ASME Containers

The rate of discharge required for a given container is determined by the calculation of the surface area of the container as shown in "Chart A" for LP-Gas and "Chart B" for NH_3.

The set pressure of a pressure relief valve depends upon the design pressure of the container. Refer to NFPA #58 "Liquefied Petroleum Gas Code" for more information.

PRESSURE RELIEF VALVE WARNING

Chart A - Minimum Required Rate of Discharge for LP-Gas Pressure Relief Valves Used on ASME Containers

From NFPA Code #58, Table 5.9.2.6 (2017 Edition)

Minimum required rate of discharge in cubic feet per minute of air at 120% of the maximum permitted start-to-discharge pressure relief valves to be used on containers other than those constructed in accordance with Interstate Commerce specification.

Surface Area Sq. Ft.	Flow Rate CFM Air	Surface Area Sq. Ft.	Flow Rate CFM Air	Surface Area Sq. Ft.	Flow Rate CFM Air	Surface Area Sq. Ft.	Flow Rate CFM Air	Surface Area Sq. Ft.	Flow Rate CFM Air	Surface Area Sq. Ft.	Flow Rate CFM Air	Surface Area Sq. Ft.	Flow Rate CFM Air
20 or less	626	85	2050	150	3260	230	4630	360	6690	850	13540	1500	21570
25	751	90	2150	155	3350	240	4800	370	6840	900	14190	1550	22160
30	872	95	2240	160	3440	250	4960	380	7000	950	14830	1600	22740
35	990	100	2340	165	3530	260	5130	390	7150	1000	15470	1650	23320
40	1100	105	2440	170	3620	270	5290	400	7300	1050	16100	1700	23900
45	1220	110	2530	175	3700	280	5450	450	8040	1100	16720	1750	24470
50	1330	115	2630	180	3790	290	5610	500	8760	1150	17350	1800	25050
55	1430	120	2720	185	3880	300	5760	550	9470	1200	17960	1850	25620
60	1540	125	2810	190	3960	310	5920	600	10170	1250	18570	1900	26180
65	1640	130	2900	195	4050	320	6080	650	10860	1300	19180	1950	26750
70	1750	135	2990	200	4130	330	6230	700	11550	1350	19780	2000	27310
75	1850	140	3080	210	4300	340	6390	750	12220	1400	20380		
80	1950	145	3170	220	4470	350	6540	800	12880	1450	20980		

Surface area = Total outside surface area of container in square feet.

When the surface area is not stamped on the name plate or when the marking is not legible, the area can be calculated by using one of the following formulas:

1. Cylindrical container with hemispherical heads. Area (in sq. ft.) = overall length (ft.) x outside diameter (ft.) x 3.1416
2. Cylindrical container with other than hemispherical heads. Area (in sq. ft.) = [overall length (ft.) + .3 outside diameter (ft.)] x outside diameter (ft.) x 3.1416.
3. Spherical container. Area (in sq. ft.) = outside diameter (ft.) squared x 3.1416.

Flow Rate CFM Air = Required flow capacity in cubic feet per minute of air at standard conditions, 60°F. and atmospheric pressure (14.7 psia).

The flow rate discharge may be interpolated for intermediate values of surface area. For containers with total outside surface area greater than 2000 square feet, the required flow rate can be calculated using the formula. Flow Rate in CFM Air = 53.632 $A^{0.82}$. Where A = total outside surface area of the container in square feet.

Valves not marked "Air" have rate marking in cubic feet per minute of liquefied petroleum gas. These can be converted to ratings in cubic feet per minute of air by multiplying the liquefied petroleum gas ratings by the factors listed below. Air flow ratings can be converted to ratings in cubic feet per minute of liquefied petroleum gas by dividing the air ratings by the factors listed below.

Air Conversion Factors

Container Type	100	125	150	175	200	
Air Conversion Factor		1.162	1.142	1.113	1.078	1.010

Chart B - Minimum Required Rate of Discharge for Anhydrous Ammonia Pressure Relief Valves Used on ASME Containers

From ANSI/CGA G-2.1-2014, Appendix A

Minimum required rate of discharge in cubic feet per minute of air at 120% of the maximum permitted start-to-discharge pressure for pressure relief valves to be used on containers other than those constructed in accordance with United States Department of Transportation cylinder specifications.

Surface Area Sq. Ft.	Flow Rate CFM Air	Surface Area Sq. Ft.	Flow Rate CFM Air	Surface Area Sq. Ft.	Flow Rate CFM Air	Surface Area Sq. Ft.	Flow Rate CFM Air	Surface Area Sq. Ft.	Flow Rate CFM Air	Surface Area Sq. Ft.	Flow Rate CFM Air	Surface Area Sq. Ft.	Flow Rate CFM Air
20	258	85	845	150	1350	230	1920	360	2760	850	5590	1500	8900
25	310	90	885	155	1390	240	1980	370	2830	900	5850	1550	9140
30	360	95	925	160	1420	250	2050	380	2890	950	6120	1600	9380
35	408	100	965	165	1460	260	2120	390	2950	1000	6380	1650	9620
40	455	105	1010	170	1500	270	2180	400	3010	1050	6640	1700	9860
45	501	110	1050	175	1530	280	2250	450	3320	1100	6900	1750	10090
50	547	115	1090	180	1570	290	2320	500	3620	1150	7160	1800	10330
55	591	120	1120	185	1600	300	2380	550	3910	1200	7410	1850	10560
60	635	125	1160	190	1640	310	2450	600	4200	1250	7660	1900	10800
65	678	130	1200	195	1670	320	2510	650	4480	1300	7910	1950	11030
70	720	135	1240	200	1710	330	2570	700	4760	1350	8160	2000	11260
75	762	140	1280	210	1780	340	2640	750	5040	1400	8410		
80	804	145	1310	220	1850	350	2700	800	5300	1450	8650		

Surface area = Total outside surface area of container in square feet.

When the surface area is not stamped on the name plate or when the marking is not legible, the area can be calculated by using one of the following formulas:

1. Cylindrical container with hemispherical heads. Area (in sq. ft.) = overall length (ft.) x outside diameter (ft.) x 3.1416
2. Cylindrical container with other than hemispherical heads. Area (in sq. ft.) = [overall length (ft.) + .3 outside diameter (ft.)] x outside diameter (ft.) x 3.1416.
3. Spherical container. Area (in sq. ft.) = outside diameter (ft.) squared x 3.1416.

Flow Rate CFM Air = Required capacity in cubic feet per minute of air at standard conditions, 60°F. and atmospheric pressure (14.7 psia).

The rate of discharge may be interpolated for intermediate values of surface area. For containers with total outside surface area greater than 2,500 square feet, the required rate can be calculated using the formula, Flow Rate in CFM Air = 22.11 $A^{0.82}$ where A = outside surface area of the container in square feet.

Conversion Factor

ft^2 x 0.092 903 = m^2
CFM x 0.028 317 = m^3/min
ft. x 0.304 8 = m

INSTALLATION

WARNING: Failure to follow these instructions or to properly install and maintain this equipment could result in an explosion and/or fire causing property damage and personal injury or death. Marshall Excelsior Company equipment must be installed, operated and maintained in accordance with all federal, state and local codes and Marshall Excelsior Company instructions. The installation in most states must also comply with NFPA standards 58 and 59, and ANSI K61.1. Only personnel trained in the proper procedures, codes, standards and regulations of the LP-Gas and NH_3 industries should install, maintain and service this equipment.
Be sure all instructions are read and understood before installation, peration and maintenance. These instructions must be passed along to the end user of the product.

CAUTION: Contact or inhalation of liquid propane, ammonia and their vapors can cause serious injury or death! NH_3 and LP-Gas must be released outdoors in air currents that will insure dispersion to prevent exposure to people and livestock. LP-Gas must be kept far enough from any open flame or other source of ignition to prevent fire or explosion! LP-Gas is heavier than air and will not disperse or evaporate rapidly if released in still air.

Consult NFPA Codes 58 and 59 / ANSI K61.1 and/or any applicable regulations governing the application and use of pressure relief valves. Make sure you are thoroughly trained before you attempt any valve installation, inspection or maintenance.

Proper installation is essential to the safe operation of pressure relief valves. Install MEC pressure relief valves using the following steps:

1. Check that the valve is clean and free of foreign material in the valve inlet and outlet.
2. Verify that the relief valve start-to-discharge setting and flow rate is correct for the application.
3. Apply a suitable PTFE thread sealant compound to the external NPT threads.
4. Inspect the relief valve inlet and valve seat to ensure no thread sealant or foreign material is present.
5. Install relief valve into container port or manifold using appropriate wrench until leak tight joint is achieved.
6. Check for damage and proper operation after valve installation.
7. After the container is charged with product, check joints for leakage using Marshall Excelsior leak detector.
8. After installation is complete, replace protective cap onto relief valve.

Pipeaways and deflectors may be required by local codes, laws and regulations depending on the installation. Use only MEC adapters on MEC relief valves. Adapters not designed specifically for piping away MEC relief valves, such as those with 90° turns will reduce internal diameters, and decrease flow dramatically. These should never be used as they can cause the relief valve to chatter and eventually destroy itself.

The addition of deflectors, pipeaway adapters and piping will restrict the flow. To properly protect any container, the total system flow must be sufficient to relieve pressure at the pressure setting of the relief valve in accordance with all applicable codes.

REPLACEMENT OF PRESSURE RELIEF VALVES

WARNING: Under normal conditions, the useful safe service life of a pressure relief valve is 10 years from the original date of manufacture. However, the safe useful life of the valve may be shortened and replacement required in less than 10 years depending on the environment in which the valve lives. Inspection and maintenance of pressure relief valves is very important. Failure to properly inspect and maintain pressure relief valves could result in personal injuries or property damage.

The safe useful life of pressure relief valves can vary greatly depending on the environment in which they live.

Relief valves are required to function under widely varying conditions. Corrosion, aging of the resilient seat disc and friction all proceed at different rates depending upon the nature of the specific environment and application. Gas impurities, product misuse and improper installations can shorten the safe life of a relief valve. The LP-Gas dealer must observe and determine the safe useful life of relief valves in his systems.

For Additional Information Read:

1. NFPA # 58, "Storage and Handling of Liquefied Petroleum Gases".
2. NFPA # 59, "LP-Gases and Utility Gas Plants

Relief valves in service beyond their service life can exhibit the following degradation in function:

- They may leak at pressures below the set pressure.
- They may open and fail to properly reseat.
- They may open at higher than set pressure.

These failures to function properly are due primarily to four "environmental" conditions:

1. Corrosion of metal parts (particularly springs) which result in the component parts failing to perform.
2. Deterioration of synthetic rubber seat disc material.
3. Clogging or "cementing" of the movable relief valve components so that their movement is restricted.
4. Debris on the valve seat after the relief valve opens, effectively preventing the valve from resealing.

Corrosion is caused by water, corrosive atmospheres of salt and high industrial pollutants, chemicals, and contaminants. High concentrations can attack the metal parts vigorously. No suitable metals are totally resistant to such corrosion.

Synthetic rubber and seat disc materials can also be attacked by impurities in the gas and corrosive atmospheres, particularly those with sulphur dioxide. There are no suitable rubber materials which resist all contaminants.

"Cementing" of relief valve parts can be caused by normal industrial atmospheres containing particles of dirt, iron oxide, metal chips, etc. combined with water, oil, or grease. Ice collecting in recessed valves could cause failure to open. Paint and tar in relief valves also cause failure to function properly.

RELIEF VALVE SAFETY INFORMATION

Repair and Testing: MEC Pressure Relief Valves are tested and listed by Underwriters Laboratories, Inc., in accordance with UL 132 and NFPA Code #58. Construction and performance of MEC Pressure Relief Valves are
consistently checked at the factory by UL and ASME audits Therefore, testing of MEC Pressure Relief Valves in the field is not necessary.

Any pressure relief valves which shows evidence of leakage, other improper operation or is suspect as to its performance must be replaced immediately using approved procedures.

While the functioning of a pressure relief valve appears to be relatively simple, the assembly and test procedure used to manufacture these MEC products is rather complex. Highly specialized test fixtures and specially trained personnel are necessary to attain proper relief valve settings. These fixtures and personnel are available only at the factory.

WARNING: Never attempt to repair or change the setting of MEC Pressure Relief Valves. Any changes in settings or repairs in the field will void the MEC warranty and product listings, and may create a serious hazard.

PIPEAWAY ADAPTERS: Pipeaway adapters are available for most MEC Pressure Relief Valves, where it is required or desirable to pipe the discharge above or away from the container. Each adapter is designed to sever if excessive stress is applied to the vent piping—thus leaving the relief valve intact and fully operative.

QUAD-PORT RELIEF VALVE MANIFOLD

Designed for use with large LP-Gas and NH_3 stationary storage containers with flanged openings. These relief manifolds have an additional relief valve excluded from the flow rating, which allows for service and/or exchange of any one relief valve without evacuating the tank. Our large port selection handle allows for each specific valve port to be closed off so that the relief valve may be removed while the remaining valves remain under pressure protecting the tank and contents. Each manifold model is rated based on the flow through the relief valves with one valve removed from service.

FEATURES

- Heavy duty ductile iron body
- Durable V-cup Teflon® packing stem seals
- Molded rubber weather guard for manifold rotary gear with port plug
- Integral breakaway feature leaves seat and seal intact
- Weep hole deflector and hex socket plugs supplied
- Integrated pilot equalizing feature
- Corrosion resistant finish
- Convenient lifting chain included
- 3-1/2"-8 outlet thread accepts 3" MNPT pipeaway

Large port handle & easy to read port indicators

MEP990-4DFM/3DFM
Flange Reducing Spool Adapter

Part No.	Flange Size	No. of Relief Valves	Application	Flow Capacity SCFM/Air (2) UL @ 120% Set Pressure	Factory Installed Relief Valve			Accessory
					Seal Material (1)	Start-to-Discharge Setting PSIG	Part No.	8 Stud / Nut Universal Mounting Kit
ME903S3F/250VM	3" - 300# *	3	LPG	20,400 (2)	Viton®	250	MEV250VM/250	ME904SK
ME903S3F/250CN	3" - 300# *	3	LPG & NH_3	20,400 (2)	Nitrile	250	MEV250CN/250	ME904SK
ME903S4F/250VM	4" - 300#	3	LPG	20,400 (2)	Viton®	250	MEV250VM/250	ME904SK
ME903S4F/250CN	4" - 300#	3	LPG & NH_3	20,400 (2)	Nitrile	250	MEV250CN/250	ME904SK
ME904S3F/250VM	3" - 300# *	4	LPG	27,740 (3)	Viton®	250	MEV250VM/250	ME904SK
ME904S3F/250CN	3" - 300# *	4	LPG & NH_3	27,740 (3)	Nitrile	250	MEV250CN/250	ME904SK
ME904S4F/250VM	4" - 300#	4	LPG	27,740 (3)	Viton®	250	MEV250VM/250	ME904SK
ME904S4F/250CN	4" - 300#	4	LPG & NH_3	27,740 (3)	Nitrile	250	MEV250CN/250	ME904SK
ME903S3F/265VM	3" - 300# *	3	LPG	20,555 (2)	Viton®	265	MEV250VM/265	ME904SK
ME903S3F/265CN	3" - 300# *	3	LPG & NH_3	20,555 (2)	Nitrile	265	MEV250CN/265	ME904SK
ME903S4F/265VM	4" - 300#	3	LPG	20,555 (2)	Viton®	265	MEV250VM/265	ME904SK
ME903S4F/265CN	4" - 300#	3	LPG & NH_3	20,555 (2)	Nitrile	265	MEV250CN/265	ME904SK
ME904S3F/265VM	3" - 300# *	4	LPG	28,550 (3)	Viton®	265	MEV250VM/265	ME904SK
ME904S3F/265CN	3" - 300# *	4	LPG & NH_3	28,550 (3)	Nitrile	265	MEV250CN/265	ME904SK
ME904S4F/265VM	4" - 300#	4	LPG	28,550 (3)	Viton®	265	MEV250VM/265	ME904SK
ME904S4F/265CN	4" - 300#	4	LPG & NH_3	28,550 (3)	Nitrile	265	MEV250CN/265	ME904SK

(1) For use with modified 3 ANSI Flange with 4" port
(3) Nitrile not Listed

(2) Flow rating based on number of valves indicated in parenthesis ( )
Flow rates are shown as bare relief valves, pipeaways will reduce flow

Accessories	
Part No.	Description
MEP990-4DFM/3DFM	4"-300 LB X 3"-300 LB Flanged ACF/ESV/ISC Adapting Spool Kit

Teflon® is a trademark of DuPont Company and Viton® is a trademark of DuPont Performance Elastomers.

Made in the U.S.A.

MINI QUAD-PORT RELIEF MANIFOLD

For use with large LPG & NH_3 stationary storage containers with 2" FNPT openings. These Relief Manifolds have an additional relief valve excluded from the flow rating, which allows for service and/or exchange of any one relief valve without evacuating the tank. Our large port selection handle allows for each specific valve port to be closed off so that the relief valve may be removed while the remaining valves stay under pressure protecting the tank and contents. Each manifold model is rated based on the flow through the relief valves with one valve removed from service.

ME903S-16B/250VM

FEATURES

- Heavy Duty Ductile Iron Body
- All Stainless Steel Internal Components
- Durable Teflon V-Pack Stem Seals
- Large Diameter Port Selection Handle and Port Indicator
- Molded Rubber Weather Guard for Manifold Rotary Gear with Port Plug
- Available with 250 PSIG and 265 PSIG Relief Valve Set Pressures
- Vapor Equalizing Feature for Easy Port to Port Rotation
- Includes Tank Stabilizer Nut for Maximum Strength at Container Connection

COVERS MOST 30,000 GALLON TANKS WITH ONLY TWO MANIFOLD

Part No. (2)	Relief Valve STD	Application		Tank Connection Size	Relief Valve		* Flow Rating SCFM/AIR @ 120% of set pressure
		LPG	NH_3		# of Valves	Part No.	UL Rating
ME902S16B/250	250 PSIG	YES	NO	2" MNPT	2	**MEV125B/250**	5,115 (1)
ME902S16/250	250 PSIG	NO	YES	2" MNPT	2	**MEV125/250**	5,115 (1)
ME902S16/265	265 PSIG	NO	YES	2" MNPT	2	**MEV125/265**	5,855 (1)
ME903S16B/250	250 PSIG	YES	NO	2" MNPT	3	**MEV125B/250**	9,320 (2)
ME903S16/250	250 PSIG	NO	YES	2" MNPT	3	**MEV125/250**	9,320 (2)
ME903S16/265	265 PSIG	NO	YES	2" MNPT	3	**MEV125/265**	10,795 (2)
ME904S16B/250	250 PSIG	YES	NO	2" MNPT	4	**MEV125B/250**	12,481 (3)
ME904S16/250	250 PSIG	NO	YES	2" MNPT	4	**MEV125/250**	12,481 (3)
ME904S16/265	265 PSIG	NO	YES	2" MNPT	4	**MEV125/265**	13,630 (3)

(1) Flow rating based on number of valves indicated in parenthesis ( ).
Flow rates shown are for bare relief valves, pipaways will reduce flow rates.
(2) To order Viton seal materials add "VM" for Viton® after the prefix part number - i.e. ME904S-16B/250VM

Accessories	
Part No.	**Description**
MEP178	Pipeaway Adapter for MEV125 Series w/ 2" FNPT Outlet - Aluminum
MEP178K	Pipeaway Adapter Kit w Stabilizer Bracket for ME904S-16
MEP123	Installation / Removal Tool for MEV125 Series Relief Valves

Teflon® is a trademark of DuPont Company and Viton® is a trademark of DuPont Performance Elastomers.

MEP178K
(Pipeaway Adapter & Stabilizer Kit)

MINI QUAD-PORT TANK SIZING CHART

TANK SIZING REFERENCE CHART							
		LPG			NH3		
Part No.	Relief Valve STD	30,000 Gallon 109" O.D.	30,000 Gallon 131" O.D.	18,000 Gallon 109" O.D.	30,000 Gallon 109" O.D.	30,000 Gallon 131" O.D.	18,000 Gallon 109" O.D.
ME902 Series	250 PSIG	N/A	5	3	2	2	2
ME902 Series	265 PSIG	N/A	N/A	3	2	2	2
ME903 Series	250 PSIG	3	3	2	2	1	1
ME903 Series	265 PSIG	3	3	2	2	1	1
ME904 Series	250 PSIG	3	2	2	1	1	1
ME904 Series	265 PSIG	3	2	2	1	1	1
* Number indicates quantity of relief manifolds to adequated relief vapor overpressure conditions for listed tank surface areas							

MINI QUAD-PORT RELIEF VALVE MANIFOLD

For use with large LPG & NH3 stationary storage containers with 2" FNPT openings. These Relief Manifolds have an additional relief valve excluded from the flow rating, which allows for service and/or exchange of any one relief valve without evacuating the tank. Our large port selection handle allows for each specific valve port to be closed off so that the relief valve may be removed while the remaining valves stay under pressure protecting the tank and contents. Each manifold model is rated based on the flow through the relief valves with one valve removed from service.

ME904S-16

c UL us

MEV125/250

FEATURES

- Heavy duty ductile iron body
- All stainless steel internal components
- Durable teflon V-pack stem seals
- Large diameter port selection handle and port indicator
- Molded rubber weather guard for manifold rotary gear with port plug
- apor equalizing feature for easy port-to-port rotation
- Includes tank stabilizer nut for maximum strength at container connection

Part No.	Application		Tank Connection Size	Relief Valve Port
	LPG	NH_3		# of Valves
ME904S-16	Yes	Yes	2" MNPT	1-1/4" FNPT (4)

Accessories			
		Application	
Part No.	Description	LPG	NH_3
MEV125/250	1-1/4"MNPT External Relief Valve-Nitrile 250PSI - 6,328 SCFM	No	Yes
MEV125/265	1-1/4"MNPT External Relief Valve-Nitrile 265PSI - 6,542 SCFM	No	Yes
MEV125B/250	1-1/4"MNPT External Relief Valve-Nitrile 250PSI - 6,328 SCFM	Yes	No
MEV125B/265	1-1/4"MNPT External Relief Valve-Nitrile 265PSI - 6,542 SCFM	Yes	No

EXTERNAL PRESSURE RELIEF VALVES

1/4"NPT ~ 1" NPT

Designed for installation in stationary ASME applications such as bulk plant, skid tanks, underground and above ground containers, as the primary pressure relief valve.

NOTE: This valve and all working parts are to be installed outside the container. Therefore, to ensure proper operation of the valve, the valve must be protected from damage and inspections performed as prescribed by Marshall Excelsior.

MEV50/250

MEVS-PVE431/250

FEATURES

- Brass construction for LP-Gas application
- Compact design to fit any application
- Stainless steel spring
- Specially designed internal components to increase flow at discharge
- Custom start-to-discharge settings available upon request
- Non-adjustable, tamper resistant design

Part No.	Container Connection	Seal Material *	Start-to-Discharge Setting PSIG	OAL	Wrench Hex	Flow Capacity SCFM/Air ** UL @ 120% Set Pressure	Application	Accessories
MEV25/60	1/4" MNPT	Nitrile	60 PSIG	1-59/64"	7/8"	—	LPG	MEP173 Pipeaway Adapter
MEV25/250	1/4" MNPT	Nitrile	250 PSIG	1-59/64"	7/8"	—	LPG	
MEV25/312	1/4" MNPT	Nitrile	312 PSIG	1-59/64"	7/8"	—	LPG	
MEV25/375	1/4" MNPT	Nitrile	375 PSIG	1-59/64"	7/8"	—	LPG	
MEV50/250	1/2" MNPT	Nitrile	250 PSIG	2-1/2"	1-1/8"	200	LPG	MEP174 Pipeaway Adapter
MEV50/375	1/2" MNPT	Nitrile	375 PSIG	2-1/2"	1-1/8"	—	LPG	
MEV75/250	3/4" MNPT	Nitrile	250 PSIG	2-21/32"	1-1/8"	—	LPG	
MEV75/312	3/4" MNPT	Nitrile	312 PSIG	2-21/32"	1-1/8"	—	LPG	
MEV75/375	3/4" MNPT	Nitrile	375 PSIG	2-21/32"	1-1/8"	—	LPG	
MEVS-PVE431B/250	3/4" MNPT	Nitrile	250 PSIG	3-21/64"	1-3/4"	1,740	LPG	MEP173 Pipeaway Adapter
MEVS-PVE431/250	1" MNPT	Nitrile	250 PSIG	4"	1-3/4"	1,740	LPG	

Note: Kalrez option available
Per NFPA Code #58, Table 5.9.2.6 (2017 Edition) area shown is for UL or ASME flow rating, which ever is greater
* Nitrile and Kalr ® not UL Listed
** Flow rates are shown for bare relief valves, pipeaways will reduce flow

Viton® and Kalrez® are trademarks of DuPont Performance Elastomers.

EXTERNAL PRESSURE RELIEF VALVES

1-1/4" & 2-1/2" NPT

NH_3

MEV125/250
(Aluminum)

LPG

MEV125B/250
(Brass)

MEV250VM/250

MEV125 Series - Designed for use with large LPG & NH3 storage containers as a primary pressure relief valve on ASME above and below ground bulk plant installations. All working components are external to the container connection away from possible product contaminants. Compatible with 1-1/4" FNPT multiple head units including ME902S-16, ME903S-16 & ME904S-16 Series Mini Quad-Port Manifolds.

MEV250 Series - Designed for use with storage containers as a primary pressure relief valve on ASME above and below ground installations. All working components and external to the container connection away from possible product contaminants. Compatible with all standard LPG pressure vessels with NPT couplings.

FEATURES

- Durable single piece anodized aluminum or brass forged body
- Stainless steel internal components
- Standard Seal Material: HNBR (Nitrile) or Viton®
- Available Seal Material: Kalrez
- Outlet thread accepts MEP178 pipeaway for 2" FNPT pipeaway
- includes plastic weather cap for relief valve outlet

MEP170

MEP250

Part No.	STD/PSIG	Seal Material(3)	Container Connection	OAL	Wrench Hex	Flow Capacity SCFM/AIR(1) UL @ 120% set pressure	Suitable for tanks w/ surface area up to: (2)	Application		Accessories
								LPG	NH_3	
MEV125B/250	250 PSIG	Nitrile	1-1/4" MNPT	10-1/2"	2-11/16"	6,330	340 Sq. Ft.	YES	NO	**MEV125-109** Replacement Cap; **MEP178** Pipeaway Adapter; **MEP123** Installation / Removal Tool
MEV125B/265	265 PSIG	Nitrile	1-1/4" MNPT	10-1/2"	2-11/16"	6,545	350 Sq. Ft.	YES	NO	
MEV125BVM/250	250 PSIG	Viton®	1-1/4" MNPT	10-1/2"	2-11/16"	6,330	340 Sq. Ft.	YES	NO	
MEV125BVM/265	265 PSIG	Viton®	1-1/4" MNPT	10-1/2"	2-11/16"	6,545	350 Sq. Ft.	YES	NO	
MEV125/250	250 PSIG	Nitrile	1-1/4" MNPT	10-1/2"	2-11/16"	6,330	340 Sq. Ft.	NO	YES	
MEV125/265	265 PSIG	Nitrile	1-1/4" MNPT	10-1/2"	2-11/16"	6,545	350 Sq. Ft.	NO	YES	
MEV125VM/250	250 PSIG	Viton®	1-1/4" MNPT	10-1/2"	2-11/16"	6,330	340 Sq. Ft.	YES	NO	
MEV125VM/265	265 PSIG	Viton®	1-1/4" MNPT	10-1/2"	2-11/16"	6,545	350 Sq. Ft.	YES	NO	
MEV250VM/250	250 PSIG	Viton®	2-1/2" MNPT	10-1/2"	4-1/8"	10,333	610 Sq Ft.	YES	NO	**MEP170** Relief Valve Adapter; **MEP250** Installation/ Removal Tool
MEV250CN/250	250 PSIG	Nitrile	2-1/2" MNPT	10-1/2"	4-1/8"	10,333	610 Sq Ft.	YES	YES	
MEV250VM/265	265 PSIG	Viton®	2-1/2" MNPT	10-1/2"	4-1/8"	10,948	655 Sq Ft.	YES	NO	
MEV250CN/265	265 PSIG	Nitrile	2-1/2" MNPT	10-1/2"	4-1/8"	10,948	655 Sq Ft.	YES	YES	

(1) Flow rates shown are for bare relief valves, pipaways will reduce flow rates.
(2) Per NFPA Code #58, Table 5.9.2.6 (2017 Edition) area shown is for UL or ASME flow rating, whichever is larger.
(3) Kalrez® seal materials add "K" after the prefix part number - i.e. MEV125K/250

DOT FULL INTERNAL PRESSURE RELIEF VALVES

Designed for use on forklift cylinders and other DOT removable cylinders up to 122 pounds of LP-Gas capacity. The working components of this valve are located inside the tank reducing possible malfunction caused by outside debris or other foreign materials.

NOTE: NFPA #58 states, "All containers used in industrial trucks (including fork lift truck cylinders) service shall have the container pressure relief valve replaced by a new or unused valve within 12 years of the date of manufacture of the container and every 10 years thereafter."

MEV75FIR

FEATURES

- Stainless steel spring
- Non-adjustable, tamper resistance design
- 45 and 90 degree discharge vents available

MEP175C

MEP175-90

MEP175-45

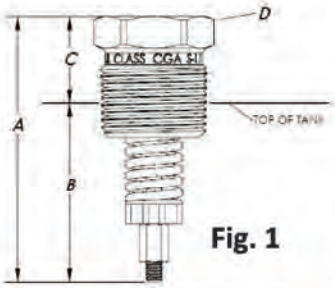

Fig. 1

Dimensions (Approx.) - see Fig. 1			
A	B	C	D Hex
2-5/8"	1-25/32"	27/32"	1-1/16"

Part No.	Container Type	Container Connection	Seal Material*	Start-to-Discharge Setting PSIG	UL Flow Capacity SCFM/ Air** Per CGA S1.1 @ 480 PSIG	Application	Accessories			
							Protective Cap	Relief Valve Plug	Discharge Vents	
									45° Angle	90° Angle
MEV75FIR*	DOT	3/4" MNPT	Viton®	375	368	LPG	MEP175C	MEP175P	MEP175-45	MEP175-90

NOTE: Meets requirements for use on DOT containers with 242 lbs. or less weight of water or 122 lbs or less of LP-Gas
* UL Listed in accordance with Compressed Gas Association Pamphlet S-1.1, Pressure Device Standard for Cylinders;
** Flow rates are shown for bare relief valves, pipeaways will reduce flow

Viton® is a trademark of DuPont Performance Elastomers.

MEVS445A Series

FEATURES

- Used as pressure relief device on larger ASME engine fuel containers and recreational vehicle containers
- Use MEVS-PVE445AT on multiport 420-lb. DOT containers
- Protective cap MEPS-UEP16 included
- Supplied with Everseal™ pre-applied thread sealant

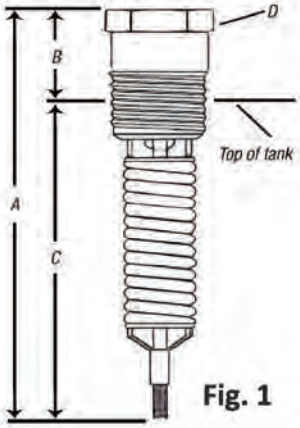

Fig. 1

Part No.	STD Setting (PSIG)	Container Connection	Installation Hex	Flow Capacity SCFM/Air ** UL @ 120% Set Pressure	Tank Surface Area (Sq. Ft.)	Pipeaway Adapter
MEVS445AM/250	250	1" MNPT	1-5/16"	987	35	MEPS445-21
MEVS445AT/375*	375	1" MNPT	1-5/16"	1625	64	MEPS445-21

NOTE: Size relief capacity per NFPA Code #58, Table 5.9.2.6 (2017 Edition)
* MEVS-445AT is classified by Underwriters Laboratories Inc. in accordance with CGA Pamphlet S-1.1.
** Flow rates are shown as bare relief valves

Dimensions (Approx.) - see Fig. 1			
A	B	C	D Hex
5-9/16"	1-3/32"	3-15/32"	1-5/16"

FULL INTERNAL PRESSURE RELIEF VALVES

Designed for use in mobile LPG & NH_3 containers as a primary pressure relief valve for bobtail and transport trailer installations. All working components are internal to the container connection preventing damage to the valve should a roll-over occur.

FEATURES

- Durable stainless steel body construction
- All stainless steel internal components for maximum corrosion resistance
- Available with Nitrile, Viton®, or Kalrez® valve seals
- Large seating surface for superior seal performance & reliability.
- Available with 250 & 265 PSI UL LISTED set pressures
- Custom set pressures available

MEV300FIR SERIES

Travel stop prevents damage to relief valve seat

MEP200FIR/MEP300FIR
Hex Installation Tool

Part No.	STD/ PSIG	Container Connection	Installation Hex	Flow Capacity SCFM/Air (2)	Service		Seat Material	Accessories	
				UL @ 120% Set Pressure	LPG	NH_3		Cap	Hex Installation Tool
MEV200FIR/250	250	2"MNPT	1-1/2"	4,460	Yes	Yes	Nitrile	MEV200FIR-09	MEP200FIR
MEV200FIR/265	265		1-1/2"	4,670	Yes	Yes	Nitrile		
MEV200FIREP/265	265		1-1/2"	4,670	No	Yes	EPR/EPDM		
MEV200FIRV/250	250		1-1/2"	4,460	Yes	No	Viton®		
MEV200FIRV/265	265		1-1/2"	4,670	Yes	No	Viton®		
MEV200FIRK/250 (1)	250		1-1/2"	4,460	Yes	Yes	Kalrez® (3)		
MEV200FIRK/265 (1)	265		1-1/2"	4,670	Yes	Yes	Kalrez® (3)		
MEV200FIRNP/250	250		1-1/2"	4,670	No	Yes	Neoprene		
MEV200FIRNP/265	265		1-1/2"	4,670	No	Yes	Neoprene		
MEV300FIR/250	250	3" MNPT	2-1/2"	10,865	Yes	Yes	Nitrile	MEV300FIR-09	MEP300FIR
MEV300FIR/265	265		2-1/2"	11,600	Yes	Yes	Nitrile		
MEV300FIREP/265	265		2-1/2"	11,600	No	Yes	EPR/EPDM		
MEV300FIRK/250 (1)	250		2-1/2"	10,865	Yes	Yes	Kalrez® (3)		
MEV300FIRK/265 (1)	265		2-1/2"	11,600	Yes	Yes	Kalrez® (3)		
MEV300FIRV/265	265		2-1/2"	11,600	Yes	No	Viton®		
MEV300FIRV/265	265		2-1/2"	11,600	Yes	No	Viton®		
MEV300FIRNP/250 (1)	250		2-1/2"	10,865	No	Yes	Neoprene		
MEV300FIRNP/265 (1)	265		2-1/2"	11,600	No	Yes	Neoprene		

(1) Nitrile and Kalrez® not UL Listed
(2) Flow rates are shown for bare relief valves, pipe-aways will reduce
(3) Recommended for LPG and NH3 Dual Ser Applications
NOTE: Size relief capacity per NFPA Code #58, Table 5.9.2.6 (2017 Edition)

Viton® and Kalrez® are trademarks of DuPont Performance Elastomers.

FLANGED FULL INTERNAL PRESSURE RELIEF

Designed for use in mobile LPG & NH_3 containers as a primary pressure relief valve for bobtail and transport trailer installations. All working components are internal to the container connection preventing damage to the valve should a roll-over incident occur. Our unique design incorporates a standard 3"ANSI - 300LB. raised face flange connection to assure a 100% leak free connection for rugged over the road applications. This eliminates problems associated with NPT threaded connections and/or tank coupling wear due to vibration caused by over the road transit, providing maximum tank and relief valve service life.

MEV300FIR-3F

FEATURES

- Durable single piece stainless steel flanged body construction.
- All stainless steel internal components for maximum corrosion resistance.
- Available with Nitrile, Viton®, or Kalrez® valve seals.
- Large seating surface for superior seal performance & reliability.
- Available with 250 & 265 PSI UL LISTED set pressures.
- Custom set pressures available

Part No.	STD/ PSIG	Container Connection	Flow Capacity SCFM/Air (2)	Service		Seat Material (1)	Accessories
			UL @ 120% Set Pressure	LPG	NH_3		Cap
MEV300FIR-3F/250	250	3" 300LB. Flange	10,865	Yes	Yes	Nitrile	MEV300FIR-09
MEV300FIR-3F/265	265	3" 300LB. Flange	11,600	Yes	Yes	Nitrile	
MEV300FIRV-3F/250	250	3" 300LB. Flange	10,865	Yes	No	Viton®	
MEV300FIRV-3F/265	265	3" 300LB. Flange	11,600	Yes	No	Viton®	
MEV300FIRK-3F/250	250	3" 300LB. Flange	10,865	Yes	Yes	Kalrez® (3)	
MEV300FIRK-3F/265	265	3" 300LB. Flange	11,600	Yes	Yes	Kalrez® ~	

(1) Nitrile and Kalrez® not UL Listed
(2) Flow rates are shown for bare relief valves.
(3) Recommended for LPG and NH3 Dual Service Applications
NOTE: Size relief capacity per NFPA Code #58, Table 5.9.2.6 (2017 Edition)

Viton® and Kalrez® are trademarks of DuPont Performance Elastomers.

SEMI-INTERNAL PRESSURE RELIEF VALVES

Designed for use in large stationary LPG containers as a primary pressure relief valve. These pressure relief valves have been specifically designed to provide optimum performance when installed in either a 2" half or full coupling making them perfect for most large stationary tank installations.

MEV200SIR MEV200SSIR

NOTE: Available with all stainless steel components for NH_3 stationary container service applications.

FEATURES

- Durable forged brass body with 3" NPT outlet pipeaway thread
- All stainless steel stem, spring, and valve gasket holder for maximum corrosion resistance
- Available with Nitrile, Viton®, or Kalrez® valve seals
- Large seating surface for superior seal performance & reliability
- Available with 125, 250, 265 PSI UL LISTED set pressures
- Custom set pressures available

Part No.	STD/ PSIG	Container Connection	Pipeaway Connection	Installation Hex	Flow Capacity SCFM/Air**	Service		Seat Material*	Accessories
					UL @ 120% Set Pressure	LPG	NH_3		
MEV200SIR/125	125	2"MNPT	3"MNPT	3-1/2"	4,870	Yes	No	Nitrile	MEV200SIR-106 (Cap & Lanyard) MEP104-24 (Pipeaway adapter) see page 104
MEV200SIR/250	250	2"MNPT	3"MNPT	3-1/2"	10,925	Yes	No	Nitrile	
MEV200SSIR/250	250	2"MNPT	3"MNPT	3-1/2"	10,925	Yes	Yes	Nitrile	
MEV200SIR/265	265	2"MNPT	3"MNPT	3-1/2"	11,475	Yes	No	Nitrile	
MEV200SSIR/265	265	2"MNPT	3"MNPT	3-1/2"	11,475	Yes	Yes	Nitrile	
MEV200SIRV/125	125	2"MNPT	3"MNPT	3-1/2"	4,870	Yes	No	Viton®	
MEV200SIRV/250	250	2"MNPT	3"MNPT	3-1/2"	10,925	Yes	No	Viton®	
MEV200SSIRV/250	250	2"MNPT	3"MNPT	3-1/2"	10,925	Yes	Yes	Viton®	
MEV200SIRV/250	250	2"MNPT	3"MNPT	3-1/2"	10,925	Yes	No	Viton®	
MEV200SSIRV/250	250	2"MNPT	3"MNPT	3-1/2"	10,925	Yes	Yes	Viton®	
MEV200SIRK/125*	125	2" MNPT	3"MNPT	3-1/2"	4,870	Yes	No	Kalrez®	
MEV200SIRK/250*	250	2" MNPT	3"MNPT	3-1/2"	10,925	Yes	No	Kalrez®	
MEV200SSIRK/250*	250	2" MNPT	3"MNPT	3-1/2"	10,925	Yes	Yes	Kalrez®	
MEV200SIRK/265*	265	2" MNPT	3"MNPT	3-1/2"	11,475	Yes	No	Kalrez®	
MEV200SSIRK/265*	265	2" MNPT	3"MNPT	3-1/2"	11,475	Yes	Yes	Kalrez®	

* Nitrile and Kalrez® not UL Listed
** Flow rates are shown as bare relief valves.
NOTE: Size relief capacity per NFPA Code #58, Table 5.9.2.6 (2017 Edition)

Viton® and Kalrez® are trademarks of DuPont Performance Elastomers.

HYDROSTATIC PRESSURE RELIEF VALVES

Designed to protect piping and shutoff valves from over pressure situations where liquid LP-Gas or NH_3 has the potential to be trapped. These relief valves provide pressure relief at or in excess of the stated pressure setting, protecting against line or plumbing system failures.

NOTE: NFPA #58 states, "Hydrostatic relief valves designed to relieve the hydrostatic pressure that can develop in sections of liquid piping between closed shutoff valves shall have pressure settings not less than 400 psig or more than 500 psig unless installed in systems designed to operate above 350 psig. Hydrostatic relief valves for use in systems designed to operate above 350 psig shall have settings not less than 110 percent or more than 125 percent of the system design pressure."

FEATURES

- Compact design to fit any application
- Stainless steel spring
- Non-adjustable, tamper resistant design
- Stainless steel models rated for LP-Gas & NH_3
- Specially designed internal components to increase flow at discharge

MEH225SS MEH25 MEH50 MEH75

Part No.	Body Material	Seal Material	Start-to-Discharge Setting PSIG	Inlet MNPT	A	B	C	D	Accessory Pipeaway Adapter
MEH225	Brass	Nitrile	440	1/4"	1-1/16"	13/16"	1/4"	9/16" Hex	—
MEH225SS/350	Stainless Steel	Nitrile	350****	1/4"	1-1/16"	13/16"	1/4"	9/16" Hex	—
MEH225SS/400	Stainless Steel	Nitrile	400	1/4"	1-1/16"	13/16"	1/4"	9/16" Hex	—
MEH225SS	Stainless Steel	Nitrile	440	1/4"	1-1/16"	13/16"	1/4"	9/16" Hex	—
MEH25/450	Brass	Nitrile	450	1/4"	1-59/64"	1-43/64"	1/4"	7/8" Hex	MEP173*
MEH25K/450	Brass	Kalrez®	450	1/4"	1-59/64"	1-43/64"	1/4"	7/8" Hex	MEP173*
MEH25V/450	Brass	Viton®	450	1/4"	1-59/64"	1-43/64"	1/4"	7/8" Hex	MEP173*
MEH50/460	Brass	Nitrile	460	1/2"	2-1/2"	2-1/8"	3/8"	1-1/8" Hex	MEP174**
MEH75/460	Brass	Nitrile	460	3/4"	2-21/32"	2-5/32"	1/2"	1-1/8" Hex	MEP174**
MEJ602H* **	Brass	Nitrile	440	1/4"	—	—	—	—	—

* 1/4" FNPT Outlet; ** 1/2" FNPT Outlet; *** Factory Installed Vent Valve, **** Special Applications

Viton® and Kalrez® are trademarks of DuPont Performance Elastomers.

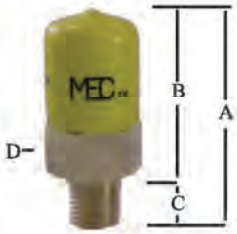

MEP173

UNIVERSAL RELIEF VALVE COVERS

These protective caps are made of durable, fade resistant vinyl. All relief valves must have a protective cap to keep debris and water out of the valve.

MEH501

Part No.	Cap ID	Cap Height	Replacement Protective Cap for Part No.
MEH501-.437	.437"	3/8"	MEH225 MEH225SS Series
MEH501-.812	.812"	1"	MEH25/450
MEH501-1.062	1.062"	3/4"	MEH50/460 MEH75/460
MEH501-1.5	1.50"	1"	—

Part No.	Cap ID	Cap Height	Replacement Protective Cap for Part No.
MEH501-1.75	1.75"	1"	—
MEH501-2.25	2.25"	1"	—
MEH501-2.625	2.625"	1"	—
MEV250-013*	3.974	1/2"	MEV250 Series

* With Lanyard

MULTIPURPOSE FILLER BYPASS RETURN VALVE

for DISPENSING APPLICATIONS

Ideally suited for use as a high capacity combination double check fill and liquid bypass return line shut-off valve. These valves are equipped standard with an integrated excess flow feature that is internal to the tank protecting against tank separation. The preinstalled side mounted ME601-6 double check fill valve allows for safe low emissions container filling at a convenient right angle orientation. The top mount 3/4" FNPT port above integrated shut-off valve seat allows for maximum liquid bypass return flow rates without adding an external line shut-off valve.

NOTE: For proper operation and performance of the excess flow feature the manual shutoff must be completely open and back-seated.

ME673DEX-6SP

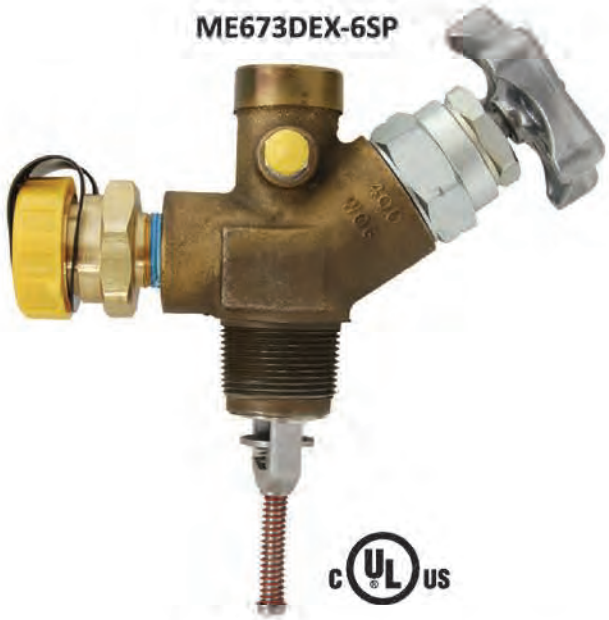

FEATURES

- Plated ductile iron body with preinstalled MEH225 hydrostatic relief valve
- All stainless steel internal construction for maximum corrosion resistance
- V-cup Teflon® packing stem seals
- Rated 400 PSI / WOG
- Preinstalled ME601-6 double check fill valve w/ cap
- FOR USE WITH LPG ONLY (this configuration contains brass components)

MEC Multipurpose Filler Bypass Return Valve						
Part No.	Tank Connection (MNPT)	Fill Connection (M. Acme)	Bypass Return Port (FNPT)	Approximate Excess Flow Closing Flow		Hydrostatic Relief
				*Liquid GPM/LPG	**Vapor SCFH/LPG	
ME673DEX-6SP	1-1/4"	1-3/4"	3/4"	58	27,000	MEH225

* For NH_3 Flow Rates Multiply by .90
** For NH_3 @ 100 PSI, Multiply by 1.6
NOTE: For use with LPG only

MULTI-PURPOSE VALVES

Intended for use as a high capacity filler valve with a manual shut-off device in LPG or NH_3 containers. These valves can be equipped with either a soft seat back check or excess flow feature that is internal to the container. The excess flow version can also be used as a vapor equalizing valve typically found in NH_3 applicators and nurse tank applications.

NOTE: For proper operation and performance of the excess flow feature the manual shutoff must be completely open and back seated.

FEATURES

- Plated ductile iron body with 1/4" NPT auxillary plugged port
- All stainless steel internal construction for maximum corrosion resistance
- Supplied with ACME cap & chain assembly
- V-cup Teflon® packing stem seals
- Rated 400 PSI / WOG
- Removable data plate

For LP-Gas & NH_3

ME670DBC

ME670DEX

MEC Multipurpose Filler / Withdrawal Valves								
Part No.	Inlet (MNPT)	Fill Connection (M. Acme)	(1) GPM/LPG Fill Capacity	Approximate Excess Flow Closing Flow		Back Check	Accessories	
				(1) Liquid GPM/LPG	(2) Vapor SCFH/LPG		Hydrostatic Relief	Vent Valve
ME670DBC	1-1/4"	1-3/4"	100	N/A	N/A	Yes	MEH225 (3)	MEJ400 (3)
							MEH225SS	MEJ402S
ME670DEX (4)	1-1/4"	1-3/4"	100	58	27,000	No	MEH225 (3)	MEJ400 (3)
							MEH225SS	MEJ402S

(1) For NH_3 Flow Rates Multiply by .90
(2) For NH_3 @ 100 PSI, Multiply by 1.6
(3) Brass accessories cannot be used for NH_3
(4) Available for 45 GPM NH_3 closing flow - i.e. ME673DEX-6/4

The ME671DIBC is equipped with an integrated back check (IBC) feature built into the lower portion of the seat disc assembly. This feature allows liquid pressure built upstream of the shut-off disc assembly to automatically be relieved back to the container when line pressures exceed 10-25 PSI over container pressure. The (IBC) feature greatly reduces product emissions and increases overall system safety.

ME671D-8

Part No.	Inlet (MNPT)	Withdrawal (FNPT)	Approximate Excess Flow Closing Flow Liquid GPM/ LPG (1)	Integrated Back Check	Accessories	
					Hydrostatic Relief	Vent Valve
ME671DIBC-6	1-1/4"	3/4"	50	Yes	N/A	MEJ400 (2)
					N/A	MEJ402S
ME671DIBC-8 (3)	1-1/4"	1"	58	Yes	N/A	MEJ400 (2)
					N/A	MEJ402S
ME671D-6	1-1/4"	3/4"	50	No	MEH225 (2)	MEJ400 (2)
					MEH225SS	MEJ402S
ME671D-8 (3)	1-1/4"	1"	58	No	MEH225 (2)	MEJ400 (2)
					MEH225SS	MEJ402S
ME672D	1-1/4"	1"	78	No	MEH225 (2)	MEJ400 (2)
					MEH225SS	MEJ402S

(1) For NH_3 Flow Rates Multiply by .90
(2) Brass accessories cannot be used for NH_3 service
(3) Available for 45 GPM NH_3 closing flow - e.i. ME671D-8/45

ME672D

MULTI-PURPOSE FILLER/WITHDRAWAL VALVES

Intended for use as a high capacity combination filler and liquid withdrawal valve with a manual shut off device in LPG or NH_3 containers. These valves can be equipped with either a soft seat back check or excess flow feature that is internal to the container. Ideally suited for use in dispensing applications as a dual purpose high capacity tank filler valve as well as a liquid return line from the pump bypass valve.

NOTE: For proper operation and performance of the excess flow feature the manual shutoff must be completely open and back seated.

FEATURES

- Plated ductile iron body with 1/4" NPT auxillary plugged port
- All stainless steel internal construction for maximum corrosion resistance
- Supplied with ACME cap & chain assembly
- V-cup Teflon® packing stem seals
- Rated 400 PSI / WOG
- Removable data plate

c UL us
For LP-Gas & NH_3

Part No.	Inlet (MNPT)	Fill Connection (M. Acme)	Withdrawal (FNPT)	(1) Fill Capacity GPM/LPG	Approximate Excess Flow Closing Flow		Back Check	Accessories	
					(1) Liquid GPM/LPG	(2) Vapor SCFH/LPG		Hydrostatic Relief	Vent Valve
ME673DEX-6 (4)	1-1/4"	1-3/4"	3/4"	100	58	27,000	No	MEH225 (3) MEH225SS	MEJ400 (3) MEJ402S
ME673DEX-8 (4)	1-1/4"	1-3/4"	1"	100	58	27,000	No	MEH225 (3) MEH225SS	MEJ400 (3) MEJ402S
ME673DBC-6	1-1/4"	1-3/4"	3/4"	100	N/A	N/A	Yes	MEH225 (3) MEH225SS	MEJ400 (3) MEJ402S
ME673DBC-8	1-1/4"	1-3/4"	1"	100	N/A	N/A	Yes	MEH225 (3) MEH225SS	MEJ400 (3) MEJ402S

(1) For NH_3 Flow Rates Multiply by .90
(2) For NH_3 @ 100 PSI, Multiply by 1.6
(3) Brass accessories cannot be used for NH_3
(4) Available for 45 GPM NH_3 closing flow - i.e ME673DEX6/4

ASME TANK FILLER VALVES

Designed to allow maximum product transfer with its manually operated open throat design. These valves have an integral high flow primary soft-seat back check and a manually operated secondary shutoff valve for maximum protection against leaks. Because these valves provide a manually operated shutoff device, the need for a flow restricting fill check adapter has been eliminated.

FEATURES

- Allows **25-50%** more product flow during filling operations
- Manual valve portion assures operator when valve is open or closed
- Removable key provided to help prevent tampering
- Constructed with a durable Nitrile O-ring primary back check seal and reliable Teflon® packing for secondary manual valve seal
- Durable all brass construction for maximum weather and spark resistance

c UL us

ME600-10
Patent Pending

Part No.	Filler Valve MNPT	Hose End M. Acme Connection	Protective Cap Included	Additional Keys
ME600-6	3/4"	1-3/4"	Yes	ME578-02
ME600-10	1-1/4"	1-3/4"	Yes	ME578-02

NOTE: Both models include manual shutoff

DOUBLE CHECK FILL VALVES

Designed for DOT forklift, engine fuel and ASME residential tanks, these double check filler valves automatically open with pump pressure providing maximum product flow rates. Once flow ceases, both upper and lower check mechanisms close to prevent product loss from the container. The lower check serves as a secondary seat to limit product loss in the event that the primary upper seat fails to operate properly due to damage.

FEATURES

- Industry best flow rate
- Resilient bonded main valve seal
- Integral break away feature leaves primary check intact in the event of delivery truck roll away
- Field repairable upper check seat
- Factory applied thread sealant

ME601-6

Made in the U.S.A.

ME601-10

Part No.	Description	Flow Rate LPG		Accessories
		10 PSI	20 PSI	Cap & Lanyard
ME601-6	1-3/4" M. Acme x 3/4" MNPT Double Fill Valve w/ Cap & Lanyard	11	24	ME601-902
ME601-10	1-3/4" M. Acme x 1-1/4" MNPT Double Fill Valve w/ Cap & Lanyard	22	36	ME601-902

VAPOR EQUALIZING VALVES

MEC vapor equalizing valves can be purchased in single or double check versions. The single check version can be used to facilitate pressure equalization of lines or containers but must not be installed directly into the container. A properly sized excess flow device must first be installed into container openings for compliance with NFPA Pamphlet #58. Double check versions consist of both an upper and lower check assembly. The upper check can be opened with vapor equalizing hose couplings equipped with projecting nozzle tips where the lower check is a normally open excess flow type. The lower excess flow check assembly automatically closes when flow out of the container exceeds its rated capacity. MEC double check vapor equalizing valves feature a two piece body construction where the upper check can be repaired while in service with minimal leakage from the container.

FEATURES

- High Flow construction
- Resilient bonded main valve seal
- Integral break away feature leaves primary check intact in the event of delivery truck roll away
- Field repairable upper check seat

ME664
Single Check Valve

ME663
Double Check Valve

Part No.	Description	Closing Flow
ME663	Double Check Vapor Return Valve 3/4" MNPT x 1-1/4" M. ACME w/ Plastic Cap	4,000 SCFH/LPG
ME664	Single Check Vapor Return Valve 3/4" MNPT x 1-1/4" M. ACME w/ Plastic Cap	N/A

ASME/DOT CONTAINER SERVICE VALVES

Intended for use in vapor withdrawal service for ASME and DOT containers or as fuel line shutoff valves.

NOTE: These valves **do not** incorporate an integral pressure relief valve and are intended for use in containers that have a separate stand alone pressure relief valve sized to properly handle the container's capacity.

FEATURES

- One piece forged brass body construction
- Dual O-ring packing design
- Easy to repair / replace bonnet assembly
- Universal bonnet assembly
- Industry best fill flow rate
- Factory applied thread sealant

Part No.	Description	Dip Tube Length
ME9101C1	3/4" MNPT X F. POL ASME/ DOT Service Valve (No Dip Tube)	N/A
ME9101D-11.1	3/4" MNPT X F. POL ASME/ DOT Service Valve (with Dip Tube)	11.1"
ME9101D-11.7	3/4" MNPT X F. POL ASME/ DOT Service Valve (with Dip Tube)	11.7"

ASME TANK MANIFOLDING SERVICE VALVES

Intended for use in vapor withdrawal service for ASME tanks where more than one vessel is installed. The internal excess flow device at the inlet of the shutoff valve provides excess flow protection in the event of a downstream line break.

NOTE: These valves do not incorporate an integral pressure relief valve or double check fill valve and are intended for use in containers that have a stand-alone pressure relief valve sized to properly handle the container's capacity and a separate double check fill valve.

Part No.	Description	Excess Flow GPM
ME9101C5	3/4" MNPT X F. POL ASME/ DOT Container Service Valve	2.6 GPM

FEATURES

- One piece forged brass body construction
- Dual O-ring packing design
- Easy to repair / replace bonnet assembly
- Universal bonnet assembly
- Industry best fill flow rate
- Factory applied thread sealant
- Heavy duty replaceable zinc hand wheel
- ASME Compliant

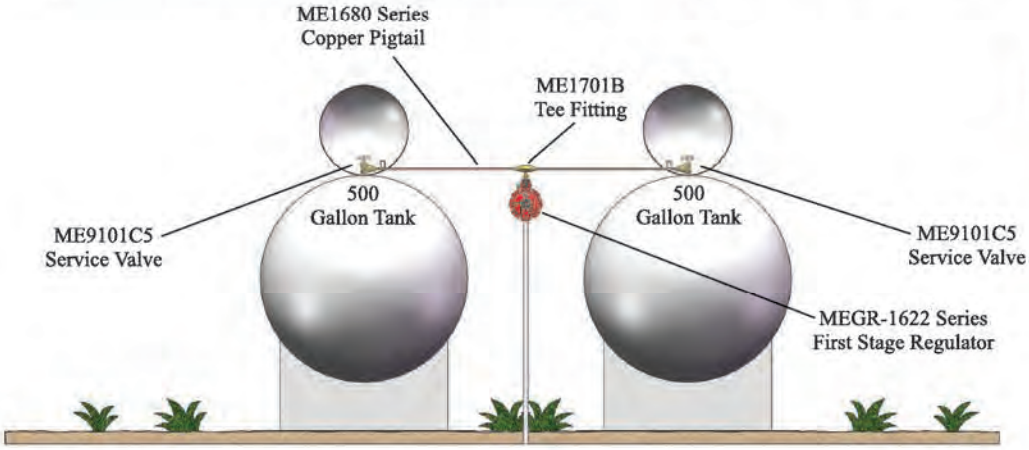

MULTI-SERVICE VAPOR VALVES
for ASME CYLINDERS

The **ME662 SERIES MULTI-SERVICE VALVE** is intended for use in vapor withdrawal service for ASME containers or as fuel line shutoff valves in combination with an integral double check fill and vapor equalization valve.

FEATURES

- One piece forged brass body construction
- Dual o-ring packing design
- Easy to repair / replace bonnet assembly
- Universal bonnet assembly
- Heavy duty replaceable zinc hand wheel
- Plugged test port: ME662 Series - 1/4" FNPT
  ME665 Series - 1/8" FNPT
- SC model features optional self-cleaning LE thumb screw vent

ME662
1-1/2" MNPT
Multi-Service Valve

Part No.	Inlet	Outlet	Vent Type	Diptube Length
ME662	1-1/2" MNPT	F. POL	MEJ401	16.0"
ME662SC	1-1/2" MNPT	F. POL	MEJ401SC	16.0"

ME665
3/4" MNPT Multi-Service Valve

The **ME665 SERIES MULTI-SERVICE VALVE** is intended for use in vapor withdrawal service for ASME containers or as fuel line shutoff valves in combination with an integral double check vapor equalization valve.

Part No.*	Inlet	Outlet	Vent Type	Diptube Lenth
ME665	3/4" MNPT	F. POL	MEJ401	12.0"
ME665SC	3/4" MNPT	F. POL	MEJ401SC	12.0"

NOTE: ME662 & ME665 series valves do not incorporate an integral pressure relief valve or double check fill valve and are intended for use in containers that have a stand-alone pressure relief valve sized to properly handle the container's capacity and a separate double check fill valve.

VAPOR WITHDRAWAL VALVES

for DOT 100 LB. CYLINDERS

Indended for use in vapor withdrawal service for DOT containers up to 100 lb. LPG capacity as fuel line shutoff valves in combination with a liquid fill and vapor relief valve.

MES-PVE3250CLG-10.6
100 LB. Vapor Service Valve

FEATURES

- One piece forged brass body construction
- Easy to repair / replace bonnet assembly
- Integral 375 PSI relief valve (Propylene service - 435 PSI)
- Heavy duty replaceable zinc hand wheel
- Optional MEJ401SC self-cleaning LE fixed liquid level vent screw
- F. POL vapor outlet with shutoff
- Available in vapor seal construction for propylene service
- Diptubes can be cut to length for specific tank needs

Part No.*	Descriptions	Container Type	Relief STD PSI	Vent Type	Diptube
MES-PVE3250BC-312	Service Vapor 3/4" NGT X F. POL (705 SCFM)	ASME	312	N/A	N/A
MES-PVE3250C-375	Service Vapor 3/4" NGT X F. POL	DOT	375	N/A	N/A
MES-PVE3250CV-435	Propylene Service Vapor 3/4" NGT X F. POL	DOT	435	N/A	N/A
MES-PVE3250CLG-375	Service Vapor 3/4" NGT X F. POL	DOT	375	MEJ401	N/A
MES-PVE3250CLGV-435	Propylene Service Vapor 3/4" NGT X F. POL	DOT	435	MEJ401	N/A
MES-PVE3250CLGSC-375	Service Vapor 3/4" NGT X F. POL	DOT	375	MEJ401SC	N/A
MES-PVE3250CLG-10.6	Service Vapor 3/4" NGT X F. POL	DOT	375	MEJ401	10.6"
MES-PVE3250CLGV-10.6	Propylene Service Vapor 3/4" NGT X F. POL	DOT	435	MEJ401	10.6"
MES-PVE3250CLGSC-10.6	Service Vapor 3/4" NGT X F. POL	DOT	375	MEJ401SC	10.6"
MES-PVE3250CLG-11.6	Service Vapor 3/4" NGT X F. POL	DOT	375	MEJ401	11.6"
MES-PVE3250CLGV-11.6	Propylene Service Vapor 3/4" NGT X F. POL	DOT	435	MEJ401	11.6"
MES-PVE3250CLGSC-11.6	Service Vapor 3/4" NGT X F. POL	DOT	375	MEJ401SC	11.6"

LIQUID WITHDRAWAL VALVES

for DOT 100LB. CYLINDERS

Indended for use in liquid withdrawal service for DOT containers up to 100 lb. LPG capacity as fuel line shutoff valves in combination with a liquid fill and vapor relief valve.

MES-PVE3250CLM-11.6
100 LB. Liquid Service Valve

FEATURES

- One piece forged brass body construction
- Easy to repair / replace bonnet assembly
- Integral 375 PSI relief valve
- Heavy duty replaceable zinc hand wheel
- Optional MEJ401SC self-cleaning LE fixed liquid level vent screw
- Male CGA555 liquid outlet with shutoff
- Integral 1.0 GPM/LPG excess flow valve
- Diptubes can be cut to length for specific tank needs

Part No.*	Descriptions	Container Type	Relief STD PSI	Withdrawal Tube Width	Vent Type	Diptube
MES-PVE3250CLM-375	Service Liquid 3/4" NGT X M. CGA555	DOT	375	1/4"	MEJ401	N/A
MES-PVE3250CLMSC-375	Service Liquid 3/4" NGT X M. CGA555	DOT	375	1/4"	MEJ401SC	N/A
MES-PVE3250CLM-11.6	Service Liquid 3/4" NGT X M. CGA555	DOT	375	1/4"	MEJ401	11.6"
MES-PVE3250CLMSC-11.6	Service Liquid 3/4" NGT X M. CGA555	DOT	375	1/4"	MEJ401SC	11.6"

MULTI-SERVICE VAPOR VALVES

for DOT 200LB. CYLINDERS

Indended for use in vapor withdrawal service for DOT containers up to 200 lb. LPG capacity as fuel line shutoff valves in combination with a fill and vapor relief valve. Ideal for on-site filling without interruption of service by combining all functions into a single 3/4" NPT tank opening.

MES-PVE2030BC Multi-Service Valve

FEATURES

- One piece forged brass body construction
- Integral Fill Valve
- Easy to repair / replace bonnet assembly
- Integral 375 PSI relief valve
- Heavy duty replaceable zinc hand wheel
- Liquid splash tube to prevent liquid in vapor opening
- Optional MEJ401SC self-cleaning LE fixed liquid level vent screw
- F. POL vapor outlet with shutoff

Part No.*	Fill Connection	Inlet	Outlet	Vent Type	Diptube Length	Relief STD PSI
MES-PVE2030BC-10.6	1-3/4" ACME	3/4" NGT	F. POL w/ Shutoff	—	10.6"	375
MES-PVE2030BCSC-10.6	1-3/4" ACME	3/4" NGT		MEJ401SC	10.6"	375
MES-PVE2030BC-11.2	1-3/4" ACME	3/4" NGT		—	11.2"	375
MES-PVE2030BCSC-11.2	1-3/4" ACME	3/4" NGT		MEJ401SC	11.2"	375
MES-PVE2030BC-11.6	1-3/4" ACME	3/4" NGT		—	11.6"	375
MES-PVE2030BCSC-11.6	1-3/4" ACME	3/4" NGT		MEJ401SC	11.6"	375
MES-PVE2030BC-8.6	1-3/4" ACME	3/4" NGT		—	8.6"	375
MES-PVE2030BCSC-8.6	1-3/4" ACME	3/4" NGT		MEJ401SC	8.6"	375

MULTI-SERVICE VAPOR VALVES

Indended for use in vapor withdrawal service for DOT or ASME containers ranging from 420 lbs./100 gallons LPG capacity as fuel line shutoff valves in combination with a fill and vapor relief valve. Ideal for on-site filling without interruption of service by combining all functions into a single 1" tank opening.

MES-PVE2035AT Multi-Service Valve

FEATURES

- One piece forged brass body construction
- Integral Fill Valve
- Easy to repair / replace bonnet assembly
- Integral 375 PSI or 250 PSI relief valve
- Heavy duty replaceable zinc hand wheel
- 1/8" FNPT plugged test port
- Optional MEJ401SC self-cleaning LE fixed liquid level vent screw
- Liquid splash tube to prevent liquid in vapor opening
- F. POL vapor outlet with shutoff

Part No.*	Filler Connection	Inlet	Outlet	Diptube Length	Relief STD PSI	Vent Type
MES-PVE2035AT-11.2	1-3/4" ACME	1" NGT	F. POL	11.2"	375	—
MES-PVE2035ATSC-11.2	1-3/4" ACME	1" NGT	F. POL	11.2"	375	MEJ401SC
MES-PVE2035AT-11.7	1-3/4" ACME	1" NGT	F. POL	11.7"	375	—
MES-PVE2035ATSC-11.7	1-3/4" ACME	1" NGT	F. POL	11.7"	375	MEJ401SC
MES-PVE2035AT-250-11.2	1-3/4" ACME	1" NGT	F. POL	11.2"	250	—
MES-PVE2035ATSC-250-11.2	1-3/4" ACME	1" NGT	F. POL	11.2"	250	MEJ401SC
MES-PVE2035AT-250-11.7	1-3/4" ACME	1" NGT	F. POL	11.7"	250	—
MES-PVE2035ATSC-250-11.7	1-3/4" ACME	1" NGT	F. POL	11.7"	250	MEJ401SC
MES-PVE2035AT-250-12.0	1-3/4" ACME	1" NGT	F. POL	12.0"	250	—
MES-PVE2035ATSC-250-12.0	1-3/4" ACME	1" NGT	F. POL	12.0"	250	MEJ401SC

DOT FORKLIFT CYLINDER & ENGINE FUEL VALVES

Intended for vapor or liquid withdrawal service on DOT forklift or engine fuel containers. Two closing flow rates are offered - 1.5 GPM for medium to light duty vehicles and 2.6 GPM for those with greater fuel demands.

NOTE: These valves **do not** incorporate an integral pressure relief valve and are intended for use in containers that have a separate pressure relief valve to adequately handle the container's capacity. Each of these valves incorporate an excess flow valve at the tanks inlet end to prevent excessive product loss in the event of a downstream fuel line failure. For the excess flow device to perform properly the service valve must be in the full open and back seated position.

FEATURES

- One piece forged brass body construction
- Dual O-ring packing design
- Easy to repair / replace bonnet assembly
- Universal bonnet assembly
- Industry best fill flow rate
- Factory applied thread sealant
- Replaceable, heavy duty zinc hand wheel featuring a universal design

ME9101P5H

Part No.	Description	Excess Flow GPM
ME9101P5	3/4" MNPT X 3/8" MNPT Forklift Service Valve	1.6 GPM
ME9101P5H	3/4" MNPT X 3/8" MNPT Forklift Service Valve	2.6 GPM
ME9101H4	3/4" MNPT X 3/8" M. Flare Motor Fuel Service Valve	1.6 GPM
ME9101H6	3/4" MNPT X 3/8" M. Flare Motor Fuel Service Valve	2.6 GPM

This heavy duty designed wrench features a 1/2" drive socket extension for removing and installing motor fuel cylinder valves

MEP125

ENGINE FUEL REMOTE FILL VALVE

Specifically designed for remote filling applications where a standard tank type filler valve is not practical. Perfectly suited for motor fuel applications or other hard to reach remote tank applications. This single check fill valve is designed to provide maximum product fill rates along with an automatic shutoff once product flow ceases.

FEATURES

- Single check design allows maximum product flow rate
- Integral break away feature leaves check valve intact in the event of a vehicle roll away during filling
- Resilient bonded main valve seal
- Rear bulkhead mounting with quarter panel jam nut and lock washer
- Single piece main valve body for maximum strength and durability

Part No.	Description	Accessories
		Cap & Lanyard
ME602-8	1-3/4" M. Acme x 1/2" M. Flare Remote Fill Valve w/ Cap & Lanyard	ME601-902

UNDERGROUND TANK CLUSTER MANIFOLD

These multi-purpose valves are designed for use on domestic ASME underground tanks that require a single opening except for a separate liquid withdrawal port.

MES-PVE2098AT

FEATURES

- Epoxy coated ductile iron manifold
- Durable o-ring service valve packing
- Easy to repair / replace bonnet
- Supplied with 30" diptube that can be cut to length
- Standard 1/4" NPT plugged gauge port
- Optional LE vent valve available

Part No.	Container Connection	Filling Connection	Service Connection Size	Closing Flow	Gauge Flange Opening	Pressure Relief Valve Setting	Relief Valve Capacity	Fixed Liquid Level Type
MES-PVE2098AT	2-1/2" FNPT	1-3/4" ACME	F. POL	4000 CFH @ 100 PSIG	Fits "Junior" Size	250 PSIG	1740 SCFM/air	MEJ400C
MES-PVE2098ATSC	2-1/2"FNPT	1-3/4" ACME	F. POL			250 PSIG		MEJ400SC
MES-PVE2098PT*	2-1/2" FNPT	1-3/4" ACME	F. POL	4000 CFH @ 100 PSIG	Fits "Junior" Size	250 PSIG	1740 SCFM/air	MEJ400C
MES-PVE2098PTSC*	2-1/2"FNPT	1-3/4" ACME	F. POL			250 PSIG		MEJ400SC

* Includes ME460 Liquid withdrawal valve packed seperately in carton.

UNDERGROUND TANK CLUSTER VALVE REMOVAL TOOL

Universal design for convenient removal of underground tank cluster valves using a standard 3/4" drive socket wrench.

FEATURES

- Durable cast steel construction
- Powder coat finish for maximum corrosion protection
- 3/4" drive

Part No.	Description
MEP126	Underground Tank Cluster Valve Removal Tool

MEP126

ENGINE FUEL FILLER VALVES & CONNECTIONS

The CGA 790 quick closing couplings (ME220 Series) are designed to join the carburetion fuel line to the service valve on motor fuel type applications. The Acme threads allow for quick and repeated removal and connection with minimal product loss. The ME220M connects directly to the service valve outlet, while the ME220F Series connects to the motor fuel line. Both couplings have an internal safety check assembly that opens when the two are connected together. Spring force and pressure close both checks when disconnected to provide a leak free seal. The ME220M will fit any refill adapter on the market.

The ME790 Series is designed to provide a fast and reliable connection for filling motor fuel cylinders through the 1-1/4" male Acme service valve connector.

The Moto-Seal Low Emission Connector (ME220FSN) and Filler Valve (ME790SN) are the **industry's leader** in reducing product emissions without sacrificing flow emitting less than .3 CC during disconnect. The replaceable sealing tip allows the valve to make a bottom face seal when coupled with any mating motor fuel cylinder valve connector.

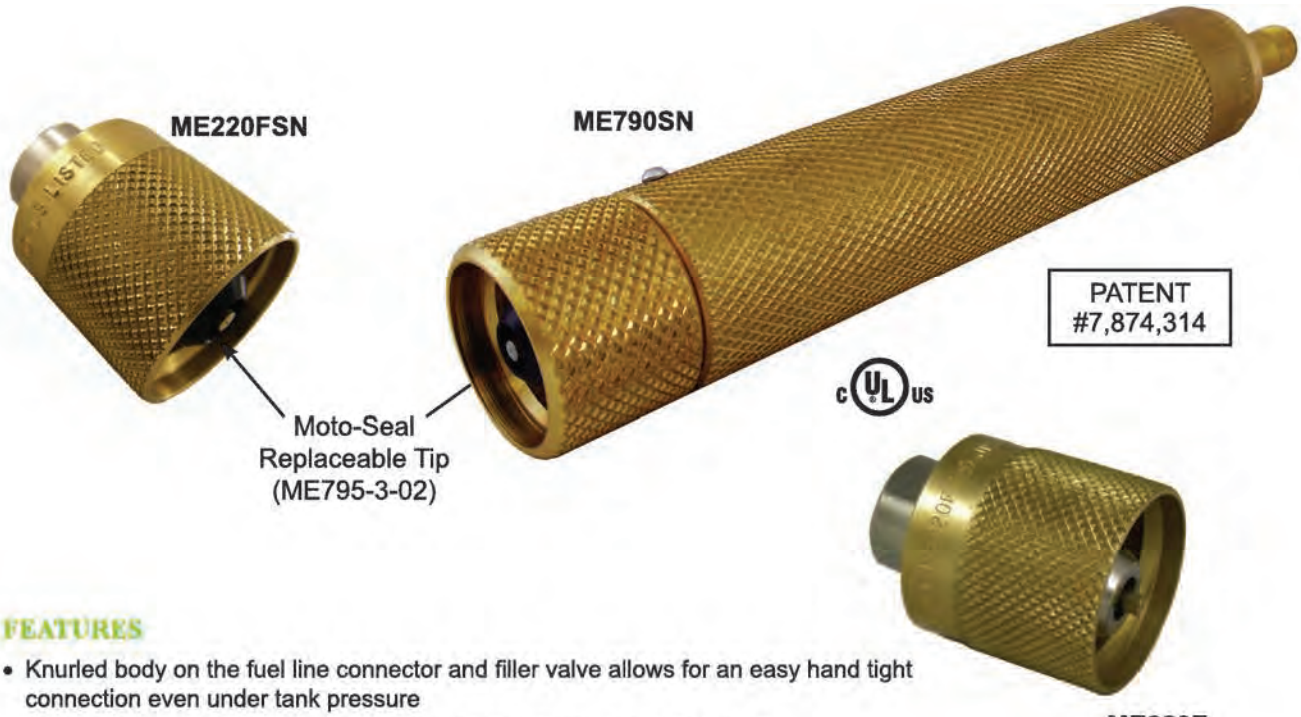

ME220F

FEATURES

- Knurled body on the fuel line connector and filler valve allows for an easy hand tight connection even under tank pressure
- Works in conjunction with all mating forklift connectors and filler valves
- ME220F series has a durable riveted valve stem, chrome plated body and wrench flats for easy installation
- ME220M has two seals—an O-ring to minimize product loss during connection and a gasket to seal the two connectors during filling operations
- Moto-Seal connector and filler offers
  - Replaceable tip for maximum service life
  - Positive seal every time with less than **.3 CC** product loss at disconnect
  - 3 layers of security against possible leaks or connection failures when the O-ring and flat gasket are intact on the male connector

ME220M

Part No.	Moto-Seal Part No.	Inlet	Outlet	Applications	Protective Brass Cap
ME220F	**ME220FSN**	1-1/4" Female Acme	1/4" FNPT	Fuel Line	—
ME220M	—	3/8" FNPT	1-1/4" Male Acme	Service Valve	ME220FP
ME790	**ME790SN**	1-1/4" Female Acme	1/4" MNPT	Filler Valve	—

VAPOR SERVICE ENGINE FUEL VALVES & CONNECTORS

These CGA 789 quick closing couplings are designed for use with vapor service motor fuel applications. Incorporates **all** the same features as the standard and Moto-Seal motor fuel filler valves and connectors. The left hand Acme thread allows service on outdoor motor fuel propane equipment including lawn mowers, etc.

ME220ML

Moto-Seal Replaceable Tip (ME795-3-02)

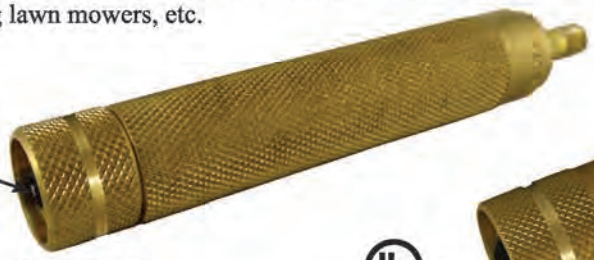

ME790LSN

PATENT #7,874,314

ME220FLSN

Part No.	Moto-Seal Part No.	Inlet	Outlet	Application	Protective Brass Cap
ME220FL	**ME220FLSN**	1-1/4" Female Left Hand Acme	1/4" FNPT	Fuel Line	—
ME220ML	—	3/8" FNPT	1-1/4" Male Left Hand Acme	Service Valve	ME220FLP
ME790L	**ME790LSN**	1-1/4" Female Left Hand Acme	1/4" MNPT	Filler Valve	—

ENGINE FUEL BULKHEADS

These bulkheads provide a stationary point for motor fuel lines to pass thru sections of sheet metal.

Part No.	Connection	Connection
MET443	3/8" Male Flare	1/4" FNPT (2 Ports)
MET444	3/4"-16 Male / 1/4" FNPT	1/4" FNPT (2 Ports)
MET445	3/4"-16 Male / 1/4" FNPT	1/4" FNPT (3 Ports)

MET444

MET443

CARBURATION FILTER & FITTINGS

The gas/air filter is used to filter foreign materials and/or particles from LP-Gas systems such as motor fuel/carburetion systems. Also designed to be used to filter air supply lines for internal and emergency shutoff valve actuator systems.

ME709

ME229-EL
90° Angle

Allows connection of a motor fuel service line from 1-3/4" female Acme vapor outlet.

Enables the installation of a 1/4" MNPT hydrostatic relief valve in a safe, protected area. This two piece carburetion hose fitting fits all stainless steel braided LP-Gas hose with a 5/16" ID. The tank valve side has a 3/8" female flare swivel and zinc plated for maximum corrosion resistance.

Part No.	Inlet	Outlet	Side Port
ME709	1/4" FNPT	1/4" MNPT	—
ME229-EL	1-3/4" F. Acme	1/2" Male Flare	—
ME8346	5/16" ID	3/8" Female Flare	1/4" FNPT

ME8346

HIGH FLOW LOW EMISSION

These quick acting hose end valves are leading the industry in minimal product loss during disconnect without sacrificing flow. They have instant full-on flow with the added protection of a quick closing, self-locking handle to prevent accidental opening of the valve during handling or storage. They are designed to be used at the end of a filling hose on dispensing systems equipped for filling containers with QCC Type I OPD or F. POL type valves.

ME777-4
L.E. Quick Acting
M. POL x 1/2" FNPT Inlet

Quick CONNECTING MODEL

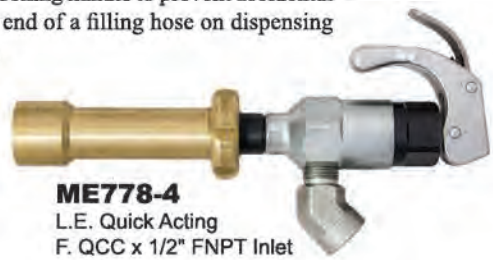

ME778-4
L.E. Quick Acting
F. QCC x 1/2" FNPT Inlet

ME779N-4
L.E. Quick Connect Filler
F. QCC x 1/2" FNPT Inlet

LESS THAN .04CC LOSS AT DISCONNECT!

ME777
M. POL

ME778
F. QCC

ME779N
F. QCC Quick Connect Filler

FEATURES

- All stainless steel internal component construction
- Molded then retained and captured for field repair-ability on valve main seal
- Vents less than .04 cc for minimal loss of product at disconnect
- Self-locking toggle handle prevents accidental valve opening
- Toggle handle and stem assembly rotate 360° for maximum ergonomic flexibility and comfort
- Available in Male POL and Female Type I / QCC fill connections
- Type I F. QCC features composite quick connect option for easy on/off and reduced repetitive motion

1/2" High Flow Low Emission Quick Acting Hose End Valves

Part No.	Description	Inlet	Outlet	Propane Flow @ 10 PSIG Pressure Differential	Propane Flow @ 30 PSIG Pressure Differential	Handle Style	Handle Material	Accessories
ME777-4	Male SN POL Filler Valve	1/2" FNPT	M. POL	5.2	10.4	Spin on	Brass	—
ME778-4	Female QCC (Type I) Filler Valve	1/2" FNPT	F. QCC	5.2	10.4	Spin on	Brass	—
ME779-4	Heavy Duty Female QCC Quick Connect Filler Valve	1/2" FNPT	F. QCC	5.2	10.4	Quick Connect	Aluminum	—
ME779N-4	Female QCC Quick Connect Filler Valve	1/2" FNPT	F. QCC	5.2	10.4	Quick Connect	Composite	—

3/4" High Flow Low Emission Quick Acting Hose End Valves

Part No.	Description	Inlet	Outlet	Propane Flow @ 10 PSIG Pressure Differential	Propane Flow @ 30 PSIG Pressure Differential	Handle Style	Handle Material	Accessories
ME777-6	Male SN POL Filler Valve	3/4" FNPT	M. POL	5.2	10.4	Spin on	Brass	ME850SS-6
ME778-6	Female QCC (Type I) Filler Valve	3/4" FNPT	F. QCC	5.2	10.4	Spin on	Brass	
ME779-6	Heavy DutyFemale QCC Quick Connect Filler Valve	3/4" FNPT	F. QCC	5.2	10.4	Quick Connect	Aluminum	
ME779N-6	Female QCC Quick Connect Filler Valve	3/4" FNPT	F. QCC	5.2	10.4	Quick Connect	Composite	

TYPE I (QCC) QUICK FILLER COUPLING

Designed to provide a fast, reliable connection for filling cylinders with Type I (QCC) style valves. The snap on/snap off design is intended to reduce labor and repetitive motion associated with threaded type filler couplings. This easy to operate filler coupling is durable, lightweight and will withstand the harshest working conditions while reducing cylinder valve thread wear. **NOTE: A quick closing shutoff valve must be used with this coupling.**

PATENT #9,010,814

ME791CJ
Not Included

FEATURES

- Durable glass filled nylon handle
- Easy to use **snap on/snap off** action for quick fill operation
- All stainless steel internal components
- Large bore stainless steel stem for increased flow
- Right or left hand operation
- Universal filler connection for all Type I (QCC) service valves

Part No.	Inlet	Outlet
ME796	1/4" MNPT	1-5/16" Female Acme Quick Connect

TYPE I (QCC) QUICK FILLER COUPLINGS & ADAPTERS

These full size Type I (QCC) filler couplings make filling DOT propane cylinders with a QCC connection quick and easy. Just a few turns allows the filler to attach and remove the coupling with minimal effort and loss of product. A longer body allows the filler coupling handle to remain outside the fixed collar of a cylinder. Can be used on a manual, electric or hydraulic system. In a manual system a shutoff valve (ME791C, ME791CJ, ME792C or ME792CJ) should be used with the filler coupling.

WARNING: It is illegal to fill a 40 pound or less DOT propane cylinder that has a standard POL connection.

ME516S

Part No.	Inlet	Outlet	Handle Style	Body/Nipple Material	OAL
ME515	1/4" MNPT	1-5/16" Female Acme	Knurled	Brass/Brass	7"
ME516	1/4" MNPT	1-5/16" Female Acme	Heavy Duty Forged	Brass/Brass	6"
ME516S	1/4" MNPT	1-5/16" Female Acme	Heavy Duty Forged	Brass/Stainless Steel	6"

ME515

The Type I (QCC) thread replaces the POL connection on 40 pound or less DOT propane cylinders. Marshall Excelsior has developed numerous adapters to allow quick conversion from Type I (QCC) to different fill applications for retailers who fill both 40 pound or less and larger propane cylinders through the same line. Simply hand tighten the adapter to the Type I (QCC) filler coupling (ME515 or ME516 Series).

ME393

ME393HD

ME394

ME569

Part No.	Inlet	Outlet	Handle Style	Converts Type I (QCC) Filler Coupling to
ME393	1-5/16" Male Acme/Female POL	Male Soft Nose POL	Knurled	POL Filler Coupling
ME393HD	1-5/16" Male Acme/Female POL	Male Soft Nose POL	Heavy Duty Forged	POL Filler Coupling
ME394	1-5/16" Male Acme/Female POL	1-1/4" Female Acme	Knurled	Motor Fuel Filler Coupling
ME569	1-5/16" Male Acme/Female POL	1-3/4" Female Acme	Knurled	Tank Filler Coupling

POL FILLER COUPLINGS & ADAPTERS

These POL filler couplings make filling DOT propane cylinders with a POL connection quick and easy. A few turns allow the soft nose POL to seal and unseal from the mating POL connection with minimal effort and loss of product. The long body models allow the filler coupling handle to remain outside the fixed collar of the cylinder. Can be used on manual, electric or hydraulic system. In a manual system a shutoff valve (ME791C, ME791CJ, ME792C or ME792CJ) should be used with the filler coupling.

ME390

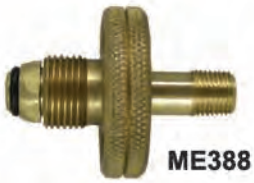

ME388

ME390S

Part No.	Inlet	Outlet	Handle Style	Body/Nipple Material	OAL
ME388	1/4" MNPT	Male Soft Nose POL	Knurled - 2" Dia.	Bass/Brass	2-11/16"
ME390	1/4"MNPT	Male Soft Nose POL	Heavy Duty Forged	Brass/Brass	6"
ME390S	1/4" MNPT	Male Soft Nose POL	Heavy Duty Forged	Brass/Stainless Steel	6"

These adapters allow for quick conversion from a POL connection to various filling applications for retailers who fill multiple cylinder types through the same Type I (QCC) connection. Simply hand tighten the adapter to the POL filler connection (ME388 or ME390 Series).

The ME393-2 allows for quick conversion from M. QCC (ME516) or F. POL (ME390) Fill Adapter to a Male Type II / Quick Fill Connector.

ME392

ME394

ME393-2

ME568

Part No.	Inlet	Outlet	Handle Style	Converts POL Filler Coupling to
ME392	Female POL	1-5/16" Female Acme	Knurled	Type I (QCC) Filler Coupling
ME393-2	Female POL	1-5/16" Male Acme	—	Male Type II / Quick Fill Connector
ME394	1-5/16" Male Acme/Female POL	1-1/4" Female Acme	Knurled	Motor Fuel Filler Coupling
ME568	Female POL	1-3/4" Female Acme	Knurled	Tank Filler Coupling
* Replacement M. QCC/F. POL gasket - Part No. MEW3				

CYLINDER VALVE WRENCHES

Designed to remove or install Type I (QCC)/OPD cylinder valves or POL service valves without damage to the valve base.

MEP121

Part No.	Thread	Style
MEP121	Male POL	POL
MEP122	1-5/16" Female Acme	Type I (QCC)/ OPD

MEP122

QUICK ACTING TOGGLE VALVES

Designed for use primarily on cylinder filling operations and industrial applications where quick and precise on/off operation is necessary. Note: This valve flows in one direction. Installing the valve in the opposite direction of the arrow may cause the valve to not close properly and/or pump pressure may open the valve.

FEATURES

- Positive shutoff
- Corrosion resistant brass construction
- One hand operation
- Optional factory installed vent valve for safe release of captured product


ME791C


ME792C

Part No.		Inlet	Outlet	Factory Installed Vent Valve
Non-Locking	Locking			
ME791C	ME792C	1/2" FNPT	1/4" FNPT	No
ME791CJ	ME792CJ	1/2" FNPT	1/4" FNPT	Yes
ME791D	ME792D	1/2" FNPT	1/2" FNPT	No
ME791DJ	ME792DJ	1/2" FNPT	1/2" FNPT	Yes

c UL us


ME791CJ

LIQUID METHANOL INJECTOR

This gravity fed methanol injector provides a fast and efficient method to inject methanol into stationary ASME containers to help prevent condensation from freezing in the propane system.

WARNING: Never attempt to refill injector with methanol while connected to a propane container. In order for the tank and methanol injector vapor equalization to occur, no more than 42 ounces of methanol can be contained within the methanol injector.

MEP700

FEATURES

- Spark resistant brass connectors and valve
- Durable steel construction body
- Automotive grade powder coat finish for maximum corrosion resistance
- For use with all multi-valve applications or where vapor recovery systems are in place

Maximum Capacity = 42 Ounces

Maximum Pressure = 250 PSIG

Part No.	Vapor Connection	Description
MEP700	1-1/4" Female Acme	Assembly
MEP700-01	——	Body Only

COPPER PIGTAILS & HOGTAILS

These pigtail and hogtail assemblies come with two brass connectors brazed onto a heavy wall annealed copper tube with a 250 psig pressure rating. The 1/4" and 3/8" tube have a pull test rating of 500 and 750 pounds respectively. UL LISTED and tested in accordance with UL 569. Different applications require specific pigtail and hogtail assemblies. Special attention is required when ordering to ensure the proper assembly is purchased for the intended application. Marshall Excelsior recommends every new installation or replacement regulator have a new pigtail installed.

***ME1600D Series Dielectric pigtails/ hogtails** are intended to isolate metallic piping from sources of electrical current and to help prevent galvanic corrosion when used on underground containers. The ME1600D dielectric pigtail/ hogtail would typically be installed at the ASME tank directly upstream of the first stage regulator prior to underground piping, isolating the underground metallic piping from electric current.

Description	Approx. Length	Part No.			
		1/4" Tube OD		3/8" Tube OD	
		Long Nipple	Short Nipple	Long Nipple	Short Nipple
Male Hard Nose POL x Male Hard Nose POL, 7/8" Nut	6	—	ME1664-06	ME1680L-06	ME1680-06
	12	ME1662-12*	ME1664-12*	ME1680L-12*	ME1680-12*
	20	ME1662-20*	ME1664-20*	ME1680L-20*	ME1680-20*
	30	ME1662-30	ME1664-30	ME1680L-30	ME1680-30
	36	ME1662-36	ME1664-36	ME1680L-36	ME1680-36
	48	ME1662-48	ME1664-48	ME1680L-48	ME1680-48
Male Hard Nose POL x Male Hard Nose POL, 1-1/8" Nut	20	ME1660-20	—	—	ME1680HD-20
	30	ME1660-30	—	—	—
	36	ME1660-36	—	—	—
	48	ME1660-48	—	—	—
1/4" Male Inverted Flare x Male Hard Nose POL, 7/8" Nut	15	—	ME1665-15	—	—
	20	ME1663-20	ME1665-20	—	—
	30	ME1663-30	ME1665-30	—	—
	36	ME1663-36	ME1665-36	—	—
	48	ME1663-48	ME1665-48	—	—
1/4" Male Inverted Flare x Male Hard Nose POL, 1-1/8" Nut	20	ME1661-20	—	—	—
	30	ME1661-30	—	—	—
	36	ME1661-36	—	—	—
	40	ME1661-40	—	—	—
	48	ME1661-48	—	—	—
1/4" MNPT x Male Hard Nose POL, 7/8" Nut	6	ME1679-06	ME1669-06	—	ME1689-06
	12	ME1679-12*	ME1669-12*	ME1689L-12	ME1689-12
	18	ME1679-18	ME1669-18*	—	—
	20	ME1679-20*	ME1669-20	ME1689L-20	ME1689-20
	30	ME1679-30	ME1669-30	ME1689L-30	ME1689-30
	36	ME1679-36	ME1669-36	—	ME1689-36
	48	ME1679-48	ME1669-48	—	ME1689-48
1/4" MNPT x Male Hard Nose POL, 1-1/8" Nut	20	ME1679HD-20	—	—	—
	48	ME1679HD-48	—	—	—
1/2" MNPT x Male Hard Nose POL, 7/8" Nut	12	—	—	ME1684L-12	ME1684-12
	20	—	—	ME1684L-20	ME1684-20


Long Nipple


Short Nipple


1/4" Inverted Flare


1/4" MNPT

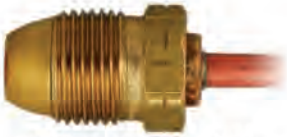
Male Hard Nose POL, 7/8" Nut


Dielectric version

c UL us

* Note: Dielectric option available Add "D" after the prefix part number i.e. ME1662D-12

BENT COPPER PIGTAILS & HOGTAILS

90° Bend

270° Bend Right Hand

Part No.	Approximate Length	1/4" Tube OD Short Nipple	3/8" Tube OD Short Nipple		
		90°	90°	270° Right	360°
Male Hard Nose POL x Male Hard Nose POL, 7/8" Nut	12	—	ME1680-12B90	ME1680-12B270R	ME1680-12B360
1/4" MNPT x Male Hard Nose POL, 7/8" Nut	5	ME1669-5B90	ME1689-5B90	—	—
	6	ME1669-6B90	ME1689-6B90	—	—

THERMOPLASTIC HOSES - 3/8" HOSE ID

Flexible thermoplastic UL and CGA approved hose. These hoses are rated up to 350 psig working pressure with a 400 pound pull test rating. Each hose comes with two ends and fully crimped brass ferrules.

WARNING: An excess flow valve will not activate if there is a break or leak downstream of the valve that does not equal or exceed the closing flow of the valve or if the excess flow valve installed exceeds the flow capacity of the system. See the Excess Flow Warning page (PG. 18) for more information regarding the use of excess flow devices.

MNPT

3/8" Female Swivel

Part No. 3/8" Hose ID	Approximate Lengths "X"*	Connection	Connection
MER610-"X"**	24, 30, 36, 48, 60, 120, 144, 240	3/8" MNPT	3/8" Female Flare Swivel
MER611-"X"**	24, 30, 36, 40, 48, 60	1/2" Female Flare Swivel	3/8" MNPT
MER613-"X"**	18, 24, 30, 36, 48, 60, 72, 120, 144, 180, 240, 300	3/8" Female Flare Swivel	3/8" Female Flare Swivel

* Replace "X" with the desired hose length i.e. MER610-48
** cULus Listed for lengths up to 60"

THERMOPLASTIC HOSES - 1/4" HOSE ID

Part No. 1/4" Hose ID	Approximate Length "X"*	Connection	Connection
MER409-"X"	15, 20, 24, 36, 60	Male Hard Nose POL, 7/8" Nut	Male Hard Nose POL, 7/8" Nut
MER428-"X"	60, 120	Female QCC, Type I Connection	Male QCC, Type I Connection with Female POL
MER412-"X"**	20	.9 GPM Excess Flow Male Hard Nose POL, 7/8" Nut	.9 GPM Excess Flow Male Hard Nose POL, 7/8" Nut
MER425-"X"**	12, 15, 18, 20, 24, 30, 36, 48, 60	Female QCC, Type I Connection	1/4" Male Inverted Flare
MER427-"X"	20	Female QCC, Type I Connection	3/8" Female Flare Swivel
MER403-"X"**	12, 15, 18, 20, 24, 30, 36, 48, 60, 72, 120, 240	Male Hard Nose POL, 7/8" Nut	1/4" Male Inverted Flare
MER401-"X"**	12, 15, 18, 20, 24, 30, 36, 48, 60	.9 GPM Excess Flow Male POL, 7/8" Nut	1/4" Male Inverted Flare
MER423-"X"	15, 20, 24, 30, 36	.9 GPM Excess Flow Male Soft Nose POL, Plastic Handwheel	1/4" Male Inverted Flare
MER404-"X"	15, 18, 20, 24, 36	#60 Orifice Hole Male Soft Nose POL, Plastic Handwheel	1/4" Male Inverted Flare
MER404AR-"X"	18, 24, 36	#60 Orifice Hole Male Soft Nose POL, Brass Round Handwheel	1/4" Male Inverted Flare
MER406AR-"X"	12, 24, 36, 48, 60	Male Soft Nose POL, Brass Round Handwheel	1/4" MNPT
MER405-"X"	12, 15, 18, 20, 24, 30, 36, 48, 60	.9 GPM Excess Flow Male POL, 7/8" Nut	1/4" MNPT
MER414-"X"	10, 14, 120	1/4" MNPT	1/4" MNPT
MER422-"X"	6, 240	1/4" Female Flare Swivel	1/4" MNPT
MER434-"X"	36, 50	3/8" Female Flare Swivel	1/4" MNPT
MER429-"X"	60,120	Red Female QCC, Type I Connection	Male QCC, Type I Connection with Female POL
MER426-"X"	15, 20, 60	Red Female QCC, Type I Connection	1/4" MNPT
MER410-"X"**	10, 12, 20, 24, 30, 36, 48, 60, 72, 120, 144, 180	3/8" MNPT	3/8" Female Flare Swivel
MER413-"X"**	24, 36, 48, 60, 72, 96, 120, 144, 180	3/8" Female Flare Swivel	3/8" Female Flare Swivel
MER408-"X"	12, 36, 60, 72, 144, 288	9/16"-18 Female Left Hand Swivel	9/16"-18 Female Left Hand Swivel
MER407-"X"	24, 36, 48, 60, 72, 120, 144	#60 Orifice Hole Male Soft Nose POL, Plastic Handwheel	1"-20 Male Swivel
MER421-"X"	24, 48, 60, 72, 144	1"-20 Female Swivel	1"-20 Male Swivel

* Replace "X" with the desired hose length i.e. MER409-24
** cULus Listed for lengths up to 60"


Male Soft Nose POL, Plastic Handwheel


Male Hard Nose POL, 7/8" Nut


Male Type I (QCC)


Female Type I (QCC), Green Handle


1/4" Male Inverted Flare


MNPT


9/16"-18 Female LH


3/8" Female Swivel


1"-20 Male Swivel


1"-20 Female Swivel

HIGH FLOW THERMOPLASTIC HOSES - 1/4" HOSE ID

for HIGH CAPACITY REGULATORS

The High Flow Series Hoses are specifically designed to meet the high demands of today's motorhomes, trailers and on demand water heaters.

Our new High Flow Type I 400,000 BTU (red nut) hoses are designed for those applications that require more than 200,000 BTU's. The new High Flow hoses are designed with both excess flow and thermal link safety features, just like the green nut Type I connector.

FEATURES

- 400,000 BTU capacity
- Excess flow safety shut-off
- RVIA and NFPA 1192 Compliant
- Brass ferrules
- 1/4" ID High pressure thermoplastic hose
- 1/4" Inv. Flare and 1/4" MPT connection offered
- 100% Leak tested
- 350 PSIG working pressure

Part No.	Approximate Lenght "X" *	Connection	Connection	Available Packaged**
MER425H-"X"	12, 15, 18, 24	Female QCC, Type I Connection	1/4" Male Inverted Flare	Yes
MER426H-"X"	15, 20	Female QCC, Type I Connection	1/4" MNPT	Yes

* Replace "X" with the desired hose lengh i.e. MER425H-15
** Packaged option consists of a plastic clamshell with barcode: MER425H-15P

STAINLESS STEEL BRAIDED HOSES

MEC Stainless Steel braided hoses are for connecting propane cylinders to the propane regulator. The Stainless Steel braid provides added protection to the hose along with the safety features of thermal protection in case of fire and excess flow protection in case of broken gas line. Female QCC, Type I connection x 1/4" inverted male flare.

NOTE: MEC green Type I Nut for use on RV application ONLY.
(200,000 BTU/H)
MEC red Type I NUT approved for RV applications.
(400,000 BTU/H)

FEATURES

- Capacity: Standard - 200,000 BTU/H
  High Flow - 400,000 BTU/H
- Excess Flow Safety Shut-Off
- RVIA and NFPA 1192 Compliant
- Brass Ferrules
- 1/4" Inv. Flare and 1/4" MPT connection offered
- 100% Leak Tested
- 350 PSIG Working Pressure
- UL Recognized Components

Part No.	Approximate Lenght "X" *	Description
MER425SS-"X"	15, 24, 36	Standard QCC w/ Braided SS Hose
MER425HSS-"X"	15,24	High Capacity QCC w/ Braided SS Hose

* Replace "X" with the desired hose lengh i.e. MER425SS-15

FLOW-LONGER / FLOW-LONGER PLUS HOSE KITS

The **Flow-Longer** Propane Kits are designed to connect small, portable appliances, normally fueled by disposable LP-Gas cylinders, to the existing LP-Gas fuel supply of a recreational vehicle, cottage, backyard patio, etc. without interrupting the supply of regulated fuel to the system. **Flow-Longer** eliminates the need to purchase an extra LP-Gas cylinder or several small, disposable type cylinders.


MER470

MER470 FLOW-LONGER PROPANE KIT INCLUDES

- Brass tee connection (ME415) .9 GPM excess flow male hard nose POL x female POL x 1"-20 male
- 12 foot hose (MER421-144) 1"-20 male x 1"-20 female


MER471

MER471 FLOW-LONGER PLUS PROPANE KIT INCLUDES

- Brass elbow connection (ME423) .9 GPM excess flow male hard nose POL x 1-5/16" male Acme/female POL with quick closing poppet x 1"-20 female
- 12 foot hose (MER421-144) 1"-20 male x 1"-20 female

STAY-LONGER / STAY-LONGER PLUS HOSE KITS

The **Stay-Longer** Propane Kits are designed to give you new flexibility on how you use your LP-Gas. You can stay longer by hooking up auxiliary LP-Gas cylinders, or you can tap into the RV's LP-Gas system to fuel portable high-pressure appliances.


MER472

MER472 STAY-LONGER PROPANE KIT INCLUDES

- Brass tee connection (ME420) .9 GPM excess flow male hard nose POL x female POL x 1"-20 male x 1/4" female inverted flare
- 5 foot hose (MER401-60) .9 GPM excess flow male POL x 1/4" male inverted flare


MER473

MER473 STAY-LONGER PLUS PROPANE KIT INCLUDES

- Brass tee connection (ME420) .9 GPM excess flow male hard nose POL x female POL x 1"-20 male x 1/4" female inverted flare
- 5 foot hose (MER401-60) .9 GPM excess flow male hard nose POL x 1/4" male inverted flare
- 12 foot hose (MER421-144) 1"-20 male x 1"-20 female

All kits include installation instructions and a convenient reusable box for storage.

NOTE: The tee fitting must be installed between the vapor withdrawal valve on your LP-Gas container and the pressure regulator. This properly places the tee fitting in the high pressure portion of the LP-Gas system. Gas connections to the tee fitting are not designed for movement or rotation after installation. Flexing, twisting, or vibration should be avoided.

WARNING: An excess flow valve will not activate if there is a break or leak downstream of the valve that does not equal or exceed the closing flow of the valve or if the excess flow valve installed exceeds the flow capacity of the system. See the Excess Flow Warning page for more information regarding the use of excess flow devices.

TYPE I (QCC) / OPD VALVE CAP

Designed to protect the 1-5/16" male Acme threads on Type I (QCC) or OPD type cylinder valves. Using a cap will reduce the likelihood of inadvertent damage to the valve's threads, shutoff mechanisms and sealing surfaces during storage or refurbishment.

ME392P installed on 20 LB cylinder

ME392P

Part No.		Fits
Brass	Black Vinyl	
ME392P	B88C	1-5/16" Male Acme

B88C

TYPE I (QCC) CONNECTORS

The Type I (QCC) connectors (ME517, ME518 and ME519 Series) are designed with a built-in excess flow feature and a positive shutoff that will not allow gas to flow until the connector is fully engaged. In case of a fire the built-in thermal protection on the QCC connector melts allowing the nipple to disengage from the tank connection and stop the flow of propane. These QCC connectors also provide a positive back check seal at disconnect to eliminate the propane in the hose from being released into the atmosphere.

To connect a Type I (QCC) connector to a cylinder, close the cylinder valve and the control valves to all connected appliances. Hand tighten the QCC onto the cylinder and slowly open the cylinder valve. If the valve is opened too quickly, the excess flow device will be activated closing the flow of propane to the appliance. If the excess flow device is activated, close appliance control valves and wait 60 seconds to allow pressure in the line to equalize. Additional equalization time may be needed depending on the length of the hose. Turn on appliances by following the manufacturer's suggested lighting procedures.

NOTE: The Type I (QCC) thread replaces the POL connection on 40 pound or less DOT propane cylinders.

ME517

ME518-25H

ME519

ME517EV

c UL us

U.S. PATENT #6,895,952

Part No.			Inlet	Flow Capacity	Handwheel Color	Thermal Protection
Outlet						
1/4" MNPT	1/4" Hose Barb	3/8" Hose Barb				
ME517	ME517-25H	ME517-38H	1-5/16" Female Acme	50 SCFH Air/100,000 BTUH	Black	Yes
ME518	ME518-25H	ME518-38H	1-5/16" Female Acme	100 SCFH Air/200,000 BTUH	Green	Yes
ME519	ME519-25H	ME519-38H	1-5/16" Female Acme	200 SCFH Air/400,000 BTUH	Red	Yes

Part No.	Inlet	Flow Capacity	Handwheel Color	Thermal Protection	Description
ME517EV	1-5/16" Female Acme	Full Flow	Black	Yes	Evacuation Coupling

WARNING: An excess flow valve will not activate if there is a break or leak downstream of the valve that does not equal or exceed the closing flow of the valve or if the excess flow valve installed exceeds the flow capacity of the system. See the Excess Flow Warning page for more information regarding the use of excess flow devices.

GAS BOX™ CONVENIENCE OUTLET

Designed to **eliminate** the need for a 20 LB cylinder or modifications generally needed to plumb an outdoor appliance to a DOT or ASME stationary tank. The Gas Box™ utilizes the standard LP-Gas outdoor appliance regulator and connector. Simply hard plumb a gas line from the first stage regulator into the Gas Box™. Then thread the standard Type I (QCC) or POL connector onto the Gas Box™, turn on the shutoff valve and enjoy continuous LP-Gas flow. Both models provide full capacity operation at 10 psig or higher inlet pressures for all outdoor appliances without modifications.

The Gas Box™ is an easy way to guarantee **increased propane sales**. It eliminates the need for 20 pound cylinders, allowing the customer to purchase any appliance without modifications.

FEATURES

- Universal Type I (QCC) / female POL outlet connection
- Primary shutoff valve for each outlet connection
- Secondary safety shutoff poppet at each outlet for zero discharge at disconnect
- For use with 10-250 psig inlet pressure
- Universal mounting hardware
- Hinged cover with latching mechanism
- Weather resistant high density polyethylene case

PATENT
#9,249,974

Part No. Color			Inlet	Outlet	No. of Outlets	Accessories
Black	Gray	Ivory				
ME951BLK	ME951GRY	ME951IVY	1/2" FNPT	1-5/16" Male Acme/Female POL	Single	MER428-60 = 60" Extension Hose MER428-120 = 120" Extension Hose (Male QCC/Female POL x Female QCC)
ME952BLK	ME952GRY	ME952IVY	1/2" FNPT	1-5/16" Male Acme/Female POL	Dual	MER429-60 = 60" Extension Hose MER429-120 = 120" Extension Hose (Male QCC/Female POL x Red Female QCC-400,000 BTU/H)

c UL us

FLOW RATE / CAPACITY SPECIFICATIONS

Model ME951 – Single outlet *

- 750,000 BTU/HR – 100 psig inlet pressure / Outlet regulated @ 9.5 – 13 in. W.C. (11" nom.)
- 450,000 BTU/HR – 10 psig inlet pressure / Outlet regulated @ 9.5 – 13 in. W.C. (11" nom.)

Model ME952 – Dual outlet *

One outlet closed

- 750,000 BTU/HR – 100 psig inlet pressure / Outlet regulated @ 9.5 – 13 in. W.C. (11" nom.)
- 450,000 BTU/HR – 10 psig inlet pressure / Outlet regulated @ 9.5 – 13 in. W.C. (11" nom.)

Both outlets open (at each outlet)

- 750,000 BTU/HR – 100 psig inlet pressure / Outlet regulated @ 9.5 – 13 in. W.C. (11" nom.)
- 325,000 BTU/HR – 10 psig inlet pressure / Outlet regulated @ 9.5 – 13 in. W.C. (11" nom.)

*These are average capacities and may change slightly due to pressure drop depending on individual installation conditions and length of gas supply runs for the service line. The BTU capacities shown will be further reduced by the flow limiting device in the female type I connection provided with the appliance being attached to the gas box.


ME951BLK


ME952GRY


ME952IVY


MER428

TYPE I (QCC) INSTALLATION ADAPTERS

Designed to provide a safe permanent outlet when installed into the household LP-Gas system. This permanent outlet eliminates the need for smaller containers when operating outdoor LP-Gas equipment. It is recommended that a shutoff valve be installed upstream from the adapter inlet to facilitate future servicing.

NOTE: To use the female POL on the ME393 series, simply remove the internal gasket. The gasket must be in place to use the Type I (QCC) connection.

FEATURES

- Can be used with both Type I (QCC) and male POL connections
- ME398 and ME399 include an internal shutoff valve which provides a leak free means for outdoor equipment to be safely connected and disconnected wothout shutting down the entire system

ME398P

ME399

ME393-1

Part No.	Packaged Part No.	Inlet	Outlet	Shutoff Device
ME393-1	—	1/4" FNPT	1-5/16" Male Acme/Female POL	—
ME393EX	—	1/4" FNPT	1-5/16" Male Acme/Female POL	.9 GPM Excess Flow*
ME393EX1.8	—	1/4" FNPT	1-5/16" Male Acme/Female POL	1.8 GPM Excess Flow*
ME398	ME398P**	Male Soft Nose POL	1-5/16" Male Acme/Female POL	Quick Closing
ME399	—	1/4" MNPT	1-5/16" Male Acme/Female POL	Quick Closing

* An excess flow device does not provide a 100% shutoff, a small amount of propane may leak if disconnected
** Packaged option consists of a plastic clamshell

WARNING: An excess flow valve will not activate if there is a break or leak downstream of the valve that does not equal or exceed the closing flow of the valve or if the excess flow valve installed exceeds the flow capacity of the system. See the Excess Flow Warning page for more information regarding the use of excess flow devices.

LOW PRESSURE QUICK DISCONNECT COUPLINGS

Designed to provide convenient quick connect and disconnect for low pressure gas appliances with 100% positive gas shut off at female coupler end of the connection. Maximum operating pressure 1/2 PSIG.

FEATURES

- Convenient wrench flats for securing connection points
- One piece coupler body
- Approved for all low pressure gas applications
- Durable all brass construction
- For indoor & outdoor applications

MEGMC4

MEGMC6

MEGMCL4

Part No.*	Description
MEGMC4	Quick Disconnect Assy - 1/4" FNPT x 1/4" MNPT Nipple
MEGMCL-4	1/4" Quick Disconnect Ball Valve Coupler - 1/4" FNPT w/ Dust Cap
MEGMC4-02	1/4" Quick Disconnect Nipple x 1/4" MNPT Adapter
MEGMC4-03	1/4" Quick Disconnect Nipple x 1/4" Hose Barb Adapter
MEGMC6	3/8" Quick Disconnect Assy - 3/8" FNPT Coupler x 3/8" FNPT Nipple
MEVSDC-4	Replacement Dust Cap - 1/4" QD Coupler w/ Lanyard

C US

CYLINDER COLLARS

These steel propane cylinder collars are designed to protect the valve installed on a cylinder. An automotive grade powder coat finish provides maximum corrosion resistance.

WARNING: It is illegal to fill a tank without a protective collar. Without a protective collar serious damage can occur to the cylinder valve which can lead to catastrophic events such as the tank becoming a dangerous projectile, an explosion and/or fire causing property damage, or personal injury or death.

Part No.	Size	*Multi-Valve
ME312-5MV	3-1/8"	Yes
ME350	3-1/2"	No
ME350MV	3-1/2"	Yes

* Multi-Valve style features cut-out in thread to provide clearence for assembly over container valve

ME350

ME350MV

MALE POL X 1/4" MNPT

Part No.			Connection	Male POL Description
Male Hard Nose POL	Male Hard Nose POL 90° Angle	Male Soft Nose POL		
ME318 ME318P*	ME345	ME1629	1/4" MNPT	7/8" Nut
ME322	—	—	1/4" MNPT	7/8" Nut, 3-1/2" OAL
—	—	ME1654	1/4" MNPT	Plastic Handwheel
—	—	ME1654AH	1/4" MNPT	Hex Handwheel
—	—	ME1654AR	1/4" MNPT	Round Handwheel
ME319	ME348	—	1/4" MNPT	1-1/8" Nut
ME1690 ME1690P*	—	ME1641	1/4" MNPT	.9 GPM Excess Flow, 7/8" Nut
—	—	ME1653	1/4" MNPT	.9 GPM Excess Flow, Plastic Handwheel
—	—	ME1653AH	1/4" MNPT	.9 GPM Excess Flow, Hex Handwheel
—	—	ME1653AR	1/4" MNPT	.9 GPM Excess Flow, Round Handwheel
ME1692	—	—	1/4" MNPT	.9 GPM Excess Flow, 1-1/8" Nut
ME1690-EX18	—	ME1641EX18	1/4" MNPT	1.8 GPM Excess Flow, 7/8" Nut
—	—	ME1638	1/4" MNPT	#60 Orifice Hole, 7/8" Nut

* Packaged option consists of a plastic clamshell

MALE POL X HOSE BARBS

Part No.		Hose I.D.	Male POL Description
Male Hard Nose POL	Male Soft Nose POL		
ME5930	ME1656-78N	1/4"	7/8" Nut
ME5931-78N	ME5931-78SN	3/8"	7/8" Nut
ME5930-118N	ME1656-118N	1/4"	1-1/8" Nut
ME5931	ME5931-SN	3/8"	1-1/8" Nut
—	ME1656	1/4"	Plastic Handwheel
—	ME1656AH	1/4"	Hex Handwheel
—	ME1656AR	1/4"	Round Handwheel
ME1683	ME1655-78N	1/4"	.9 GPM Excess Flow, 7/8" Nut
ME5931EX-78N	ME5931SNEX-78N	3/8"	.9 GPM Excess Flow, 7/8" Nut
ME1684	—	1/4"	.9 GPM Excess Flow, 1-1/8" Nut
—	ME1655	1/4"	.9 GPM Excess Flow, Plastic Handwheel
—	ME1655AH	1/4"	.9 GPM Excess Flow, Hex Handwheel
—	ME1655AR	1/4"	.9 GPM Excess Flow, Round Handwheel
—	ME1655EX18-78N	1/4"	1.8 GPM Excess Flow, 7/8" Nut
—	ME1657	1/4"	#60 Orifice Hole, 7/8" Nut

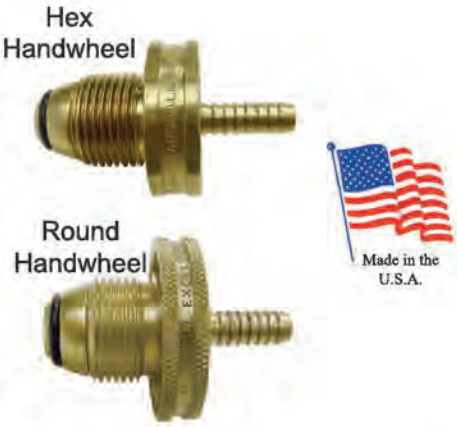

WARNING: An excess flow valve will not activate if there is a break or leak downstream of the valve that does not equal or exceed the closing flow of the valve or if the excess flow valve installed exceeds the flow capacity of the system. See the Excess Flow Warning page for more information regarding the use of excess flow devices.

SINGLE PIECE POL ADAPTERS

POL x MNPT			
Part No.	POL Connection	Excess Flow	MNPT
ME284	Female	—	1/4"
ME285	Female	—	3/8"
ME286	Female	—	1/2"
ME287	Female	—	3/4"
ME352	Male Hard Nose	—	3/8"
ME354	Male Hard Nose	—	1/2"
ME354EX9	Male Hard Nose	.9 GPM	1/2"
ME354EX18	Male Hard Nose	1.8 GPM	1/2"

ME285

ME353EX18

ME353

ME303

POL x Male Flare			
Part No.	POL Connection	Excess Flow	Male Flare
ME353	Male Hard Nose	—	3/8"
ME353-SN	Male Soft Nose	—	3/8"
ME353EX9	Male Hard Nose	.9 GPM	3/8"
ME353EX18	Male Hard Nose	1.8 GPM	3/8"
ME355	Male Hard Nose	—	1/2"
ME355-SN	Male Soft Nose	—	1/2"
ME355EX9	Male Hard Nose	.9 GPM	1/2"
ME355EX18	Male Hard Nose	1.8 GPM	1/2"
ME356	Male Hard Nose	—	5/8"
ME356-SN	Male Soft Nose	—	5/8"
ME356EX9	Male Hard Nose	.9 GPM	5/8"
ME356EX18	Male Hard Nose	1.8 GPM	5/8"

POL x FNPT		
Part No.	POL Connection	FNPT
ME300	Female	1/8"
ME301	Female	1/4"
ME302	Female	3/8"
ME303	Female	1/2"
ME304	Female	3/4"
ME351	Male Hard Nose	1/4"
ME357	Male Hard Nose	1/2"

POL x POL		
Part No.	POL Connection	POL Connection
ME305	Female	Female

WARNING: An excess flow valve will not activate if there is a break or leak downstream of the valve that does not equal or exceed the closing flow of the valve or if the excess flow valve installed exceeds the flow capacity of the system. See the Excess Flow Warning page for more information regarding the use of excess flow devices.

POL CAP & PLUGS

Part No.			Style
Brass		Plastic	
Body Only	Body With Chain	Body Only	
ME1691	ME1691-1	ME970P	Male Hard Nose POL Plug
ME1699	—	—	Female POL Cap

ME1691

ME1699

ME970P

Designed to prevent tampering, product theft and/or accidental discharge of product. This product is perfect for any size tank valve with a POL connection or 1-3/4" Acme connection or gas plumbing, such as a riser.

To install, securely screw the plug or cap to the valving or plumbing using the appropriate wrench. Snap locking mechanism into place over plug or cap. Locking mechanism will cover the installation hex or knurl and swivel freely until key is inserted and the lock is removed.

FEATURES

- All brass body construction for maximum durability
- Locking mechanism and key features durable chrome plating
- Locking mechanism swivels 360° when installed to prevent tampering or removal
- Locking mechanism cannot be removed without key
- Universal key for all sizes and styles

ME531 SERIES

ME530

ME530PL SERIES
(padlock not included)

Part No.	Thread	Packaging	Additional Keys
ME530	Male Soft Nose POL	12 Plugs & Locks, 1 Key	ME530-03
ME531-50	1/2" FNPT	6 Caps & Locks, 1 Key	ME530-03
ME531-75	3/4" FNPT	6 Caps & Locks, 1 Key	ME530-03
ME532-38	3/8" Male Flare	12 Plugs & Locks, 1 Key	ME530-03
ME532-50	1/2" Male Flare	12 Plugs & Locks, 1 Key	ME530-03
ME533	1-3/4" Female Acme	2 Caps & Locks, 1 Key	ME530-03
ME530PL	Male Soft Nose POL	12 Caps & Locks, 1 Key	ME530-03

ME533

ME532 Series

Made in the U.S.A.

POL THREAD CLEAN OUT TOOL

Designed for use with any female POL thread or valve inlet opening. Allows operator to safely remove debris and other foreign material from female .880-14 NGO left hand threads (female POL) without damaging threads. Simply thread clean out tool into female POL threads using handwheel until the tool reaches the final thread. Reverse and remove tool carefully. Reverse tool and use attached 7/8" diameter bottle brush to perform final clean out operation. Blow out any remaining debris by using a compressed air line.

FEATURES

- Constructed from hardened tool steel and plated for maximum product life
- Four clearance flutes to allow debris to be channeled away from threads
- Convenient 7/8" diameter wire brush for final clean out

MEP100

WARNING: The POL thread clean out tool is strictly intended for use as a cleaning device and in no way should be used as a gauge to determine the usability of the thread. (Always refer to NFPA 58 and follow the appropriate guidelines prior to installing LP-Gas lines)

TEE CHECK MANIFOLDS

These manifolds are designed to connect two cylinders. The check keeps the two tanks equalized and allows each tank to be changed without disrupting the flow of propane to appliances or dispensing large amounts of LP-Gas into the atmosphere from the other tank. When changing out a tank, simply close the tank valve and disconnect. The check will automatically move to the closed tank valve side to seal off the inlet of that tank allowing minimal LP-Gas discharge into the atmosphere. Primary uses are for mobile homes, single appliances, recreational vehicles or summer cottages.

The manual changeover works the same as the check except it requires the consumer to manually close the manifold valve on the side of the tank being changed over.

Part No.	Packaged Part No.	Inlet	Inlet	Outlet	Nut Size
ME1701A	—	Female POL	Female POL	Male Hard Nose POL	7/8"
ME1702A	—	Female POL	Female POL	Male Hard Nose POL	1-1/8"
ME1705A	—	Female POL	Female POL	1/4" MNPT	—
ME1700A	ME1700A-P**	1/4" Female Inverted Flare	1/4" Female Inverted Flare	1/4" MNPT	—
MEP456A*	—	1/4" Female Inverted Flare	1/4" Female Inverted Flare	1/4" MNPT	—

* Manual Change Over ** Packaged option consists of a plastic clam shell

MULTIPLE CYLINDER TEE BLOCK MANIFOLDS

These manifolds are designed to connect multiple cylinders to automatic changeover regulators. These manifolds have no check and are primarily for systems requiring more than one cylinder to be in operation at a time. The appropriate pigtail must be used to connect the manifold inlet to the service cylinder valve.

Part No.	Inlet	Inlet	Outlet	Nut Size
ME1701	Female POL	Female POL	1/4" FNPT	—
ME1701B	Female POL	Female POL	Male Hard Nose POL	7/8"
ME1702B	Female POL	Female POL	Male Hard Nose POL	1-1/8"
ME1701B-SN	Female POL	Female POL	Male Soft Nose POL	7/8"
ME1701X	Female POL	Female POL	Male .9 GPM Excess Flow Hard Nose POL	7/8"
ME1701B-X-SN	Female POL	Female POL	Male .9 GPM Excess Flow Soft Nose POL	7/8"
ME1704B	Female POL	Female POL	Female POL	1-1/8"
ME1700B	1/4" Female Inverted Flare	1/4" Female Inverted Flare	1/4" MNPT	—
ME-T9-444	1/4" FNPT	1/4" FNPT	1/4" MNPT	—

WARNING: An excess flow valve will not activate if there is a break or leak downstream of the valve that does not equal or exceed the closing flow of the valve or if the excess flow valve installed exceeds the flow capacity of the system. See the Excess Flow Warning page for more information regarding the use of excess flow devices.

Part No.	Packaged Part No.*	Inlet	Auxiliary Inlet	Outlet	Outlet
ME412	ME412P	1-5/16" Female Acme	—	1"-20 Male	1"-20 Male
ME413	ME413P	#60 Male Soft Nose POL with Round Brass Handwheel	—	1"-20 Male	1"-20 Male
ME414	ME414P	1"-20 Female	—	1"-20 Male	1"-20 Male
ME415	ME415P	.9 GPM Excess Flow Male Hard Nose POL	—	Female POL	1"-20 Male
ME416	—	.9 GPM Excess Flow Male Hard Nose POL with Plastic Handwheel	—	Female POL	Female POL
ME418	ME418P	1-5/16" Female Acme	—	1-5/16" Male Acme/Female POL with Quick Closing Poppet	1"-20 Male
ME420	ME420P	.9 GPM Excess Flow Male Hard Nose POL	1/4" Female Inverted Flare with Check	Female POL	1"-20 Male
ME421	—	.9 GPM Excess Flow Male Hard Nose POL	—	1-5/16" Male Acme/Female POL with Quick Closing Poppet	1"-20 Male
ME422	ME422P	1-5/16" Female Acme	1/4" Female Inverted Flare	1-5/16" Male Acme/Female POL with Quick Closing Poppet	1"-20 Male
ME424	—	.9 GPM Excess Flow Male Hard Nose POL	1/4" Female Inverted Flare with Check	1-5/16" Male Acme/Female POL with Quick Closing Poppet	1"-20 Male
ME425	ME425P	.9 GPM Excess Flow Male Soft Nose POL	1/4" Female Inverted Flare with Check	1-5/16" Male Acme/Female POL with Quick Closing Poppet	1"-20 Male

* Packaged option consists of a plastic clamshell with insert card

WARNING: An excess flow valve will not activate if there is a break or leak downstream of the valve that does not equal or exceed the closing flow of the valve or if the excess flow valve installed exceeds the flow capacity of the system. See the Excess Flow Warning page for more information regarding the use of excess flow devices.

CAMPING ELBOWS & ASSEMBLIES


ME423

ME481P


ME474


ME477


ME475AR


ME475


ME475B


ME497


ME497AR

Part No.	Packaged Part No.	Inlet	Outlet	Outlet
ME423	ME423P*	.9 GPM Excess Flow Male Hard Nose POL	1-5/16" Male Acme/Female POL with Quick Closing Poppet	1"-20 Male
ME474	—	1-5/6" Female Acme	1"-20 Male	—
ME475	ME475P*	#60 Male Soft Nose POL with Plastic Handwheel	1"-20 Male	—
ME475AR	—	#60 Male Soft Nose POL with Round Brass Handwheel	1"-20 Male	—
ME475B	—	#60 Male Soft Nose POL	1"-20 Male	—
ME477	—	.9 GPM Excess Flow Male Hard Nose POL with Plastic Handwheel	1"-20 Male	—
ME481	ME481P*	1"-20 Female	1-5/16" Male Acme/Female POL with Quick Closing Poppet	—
ME497	—	Male Soft Nose POL with Plastic Handwheel	1"-20 Male	—
ME497AR	—	Male Soft Nose POL with Round Brass Handwheel	1"-20 Male	—

* Packaged option consists of a plastic clamshell with insert card

WARNING: An excess flow valve will not activate if there is a break or leak downstream of the valve that does not equal or exceed the closing flow of the valve or if the excess flow valve installed exceeds the flow capacity of the system. See the Excess Flow Warning page for more information regarding the use of excess flow devices.


ME417


ME483


ME484


ME485


ME487


ME488


ME491


ME492

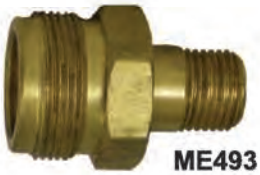
ME493
with check and o-ring


ME494
no check


ME496

Part No.	Packaged Part No.	Inlet	Outlet
ME417	—	1/4" MNPT	1"-20 Male with Check & O-ring
ME483	—	1"-20 Female Cap with Strap	—
ME484	—	1"-20 Female	1/4" Hose Barb
ME485	—	1"-20 Female	1/4" FNPT
ME487	ME487P*	1"-20 Female	Female POL
ME488	ME488P*	1"-20 Female	1/4" MNPT
ME491	—	3/8" Male Flare	1"-20 Male with Check & O-ring
ME492	ME492P*	1/4" FNPT	1"-20 Male - No Check
ME493	—	9/16"-18 Male Left Hand	1"-20 Male with Check & O-ring
ME494	—	9/16"-18 Male Left Hand	1"-20 Male - No Check
ME496	—	1/4" Hose Barb	1"-20 Male Swivel with Valve Stem & O-ring

* Packaged option consists of a plastic clamshell with insert card

ME487P

LAST CHANCE ADAPTERS

Designed to provide a quick way to change from a 20 pound cylinder to a 1 pound disposable cylinder. Can be used to connect a small 1 pound disposable cylinder to a gas grill or other appliance.

NOTE: To use the male POL on the ME393 series, simply remove the internal gasket. The gasket must be in place to use the Type I (QCC) connection.

ME480EX

ME480

Part No.	Packaged Part No.	Inlet	Outlet	Description
ME480	—	1"-20 Female	1-5/16" Male Acme/Female POL	Full Flow
ME480EX	—	1"-20 Female	1-5/16" Male Acme/Female POL	.9 GPM Excess Flow
ME480EX1.8	—	1"-20 Female	1-5/16" Male Acme/Female POL	1.8 GPM Excess Flow
ME481	**ME481P***	1"-20 Female	1-5/16" Male Acme/Female POL	Shutoff Poppet

NOTE: An excess flow device does not provide a 100% shutoff, a small amount of propane may leak if disconnected
* Packaged option consists of a plastic clamshell with insert car

ME481P

WARNING: An excess flow valve will not activate if there is a break or leak downstream of the valve that does not equal or exceed the closing flow of the valve or if the excess flow valve installed exceeds the flow capacity of the system. See the Excess Flow Warning page for more information regarding the use of excess flow devices.

DIELECTRIC UNIONS

The ME690 series dielectric unions are intended to isolate metallic piping from sources of electrical current and to help prevent galvanic corrosion. The ME690 dielectric union would typically be installed at the ASME tank directly downstream of the first stage regulator but prior to underground piping and/or at the inlet of the second stage regulator above ground at the dwelling there by protecting the underground metallic piping from corrosion and electrical current.

FEATURES

Part No.	Description	OAL
ME690-4-6	Dielectric Union 1/2" MNPT x 3/8" Male Flare	3-3/8"
ME690-6-6	Dielectric Union 3/4" MNPT x 3/8" Male Flare	3-1/2"
ME690-4-8	Dielectric Union 1/2" MNPT x 1/2" Male Flare	3-1/2"
ME690-6-8	Dielectric Union 3/4" MNPT x 1/2" Male Flare	3-5/8"
ME690-4-10	Dielectric Union 1/2" MNPT x 5/8" Male Flare	3-5/8"
ME690-6-10	Dielectric Union 3/4" MNPT x 5/8" Male Flare	3-3/4"

ME690-4-8

CGA 555 FITTINGS

CGA 555 adapters are standard cylinder valve outlet connections for liquid butane or propane withdrawal. They are designed to withstand pressures up to 3,000 psig.

Part No.	Inlet	Outlet
ME306	Female CGA 555	1/4" MNPT
ME307	Female CGA 555	9/16"-18 Male Left Hand
ME308	Female CGA 555	Female POL

ME306

ME308

ME309-1

Part No.	Cap with Chain
ME309-1	CGA 555

HIGH PRESSURE GAS CONNECTIONS

Part No.			Hose I.D.	Threads
Hose Barb Assembly	Hose Barb Only	Nut Only		
ME23C	ME23C-1	ME23C-2	1/4"	9/16"-18 Female Left Hand
ME23E	ME23E-1	ME23C-2	3/8"	9/16"-18 Female Left Hand

ME23C

Made in the U.S.A.

Part No.		Connection	POL Description
Male Hard Nose POL	Male Soft Nose POL		
ME1650	ME1650SN	9/16"-18 Male Left Hand	7/8" Nut
ME1651	—	9/16"-18 Male Left Hand	1-1/8" Nut
ME1689	ME1645-78N	9/16"-18 Male Left Hand	.9 GPM Excess Flow, 7/8" Nut
—	ME1645	9/16"-18 Male Left Hand	.9 GPM Excess Flow, Plastic Handwheel
ME1687	—	9/16"-18 Male Left Hand	.9 GPM Excess Flow, 1-1/8" Nut
ME1689-EX18	—	9/16"-18 Male Left Hand	1.8 GPM Excess Flow, 7/8" Nut

Soft Nose POL

Hard Nose POL

Outlet Bushings		
Part No.	Male Left Hand Thread	Thread
ME24C	9/16"-18	1/4" MNPT
ME24E	9/16"-18	3/8" MNPT
ME24F	9/16"-18	1/2" MNPT
ME26C	9/16"-18	9/16"-18 Male Left Hand

ME24C

WARNING: An excess flow valve will not activate if there is a break or leak downstream of the valve that does not equal or exceed the closing flow of the valve or if the excess flow valve installed exceeds the flow capacity of the system. See the Excess Flow Warning page for more information regarding the use of excess flow devices.

HOSE BARBS

Part No.				Hose I.D.	Threads
Brass		Steel [1]			
Four Barb Low Pressure	Seven Barb High Pressure	Four Barb	Four Barb with 3/64" Orifice Hole		
ME4631	—	—	—	1/4"	1/8" FNPT
ME4632	ME5632	—	—	1/4"	1/4" FNPT
ME4633	ME5633	—	—	1/4"	3/8" FNPT
ME4652	—	—	—	3/8"	1/4" FNPT
ME4653	ME5653	—	—	3/8"	3/8" FNPT
ME4654	—	—	—	3/8"	1/2" FNPT
ME4231	ME5231	—	—	1/4"	1/8" MNPT
ME4232	ME5232	—	—	1/4"	1/4" MNPT
ME4233	ME5233	—	—	1/4"	3/8" MNPT
—	—	A6132	A6133	3/8"	1/8" MNPT
ME4252	—	A1132	A1133	3/8"	1/4" MNPT
ME4253	ME5253	—	—	3/8"	3/8" MNPT
ME4254	—	—	—	3/8"	1/2" MNPT
—	—	A6138	A6139	1/2"	1/8" MNPT
—	—	A1138	A1139	1/2"	1/4" MNPT
ME4273	—	—	—	1/2"	3/8" MNPT
ME4274	ME5274	—	—	1/2"	1/2" MNPT
ME4293	—	—	—	5/8"	3/8" MNPT
ME4835	ME5835	—	—	1/4"	3/8" Male Flare
ME4855	—	—	—	3/8"	3/8" Male Flare
ME4857	—	—	—	3/8"	1/2" Male Flare
—	ME5133	—	—	1/4"	1/4" Male Inverted Flare
ME4333	—	—	—	1/4"	1/4" Female Flare Swivel
ME4335 [2]	ME5334 [5,6] ME5335	—	—	1/4"	3/8" Female Flare Swivel
ME4355 [3]	ME5336 [6] ME5355	—	—	3/8"	3/8" Female Flare Swivel
ME4357	ME5357	—	—	3/8"	1/2" Female Flare Swivel
ME4377 [4]	ME5377	—	—	1/2"	1/2" Female Flare Swivel

(1) Rated for LP-Gas & NH_3
(2) ME4335-1 (barb only); ME4335-2 (nut only)
(3) ME4355-1 (barb only); ME4335-2 (nut only)
(4) ME4377-1 (barb only); ME4377-2 (nut only)
(5) ME5334-1 (barb only)
(6) Forged Nut


ME4652


ME5632


ME5233


ME4252


A1132

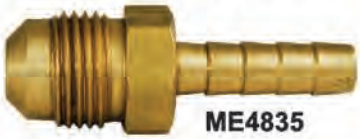
ME4835


ME5133


ME5335

HOSE FERRULES & HOSE MENDERS

Part No.	I.D.	OAL
ME7323	.525"	1"
ME7324	.531"	1"
ME7325	.562"	1"
ME7326	.593"	1"
ME7327	.625"	1"

Part No.	I.D.	OAL
ME7329	.687"	1"
ME7330	.718"	1"
ME7331	.750"	1"
ME7332	.781"	1"
ME7333	.812"	1"


ME7327

Part No.	Hose I.D.
ME27C	1/4" x 1/4"
ME27E	3/8" x 3/8"


ME27C


ME27E

HIGH PRESSURE TEST BLOCKS

Designed to test high pressure lines downstream of the container valve for system leaks. The optional bleeder valve enables the line pressure to be adjusted to the desired test pressure.

Part No.	Inlet	Outlet	PSIG	Factory Installed Vent Valve
MEJ600	Male Hard Nose POL	Female POL	0-300	No
MEJ601	Male Hard Nose POL	Female POL	0-300	Yes
MEJ601-WOG*	Male Hard Nose POL	Female POL	—	Yes

* Without gauge

LOW PRESSURE TEST KIT & ADAPTERS

These kits are designed to check for gas leaks by verifying the line pressure of an appliance. Each kit includes a case, gauge, and rubber hose with a bell on the end.

FEATURES

- Capacity 0 - 35" water column
- Adjustable gauge models can be reset to zero with provided screwdriver
- Three foot rubber hose with bell


ME50-2


ME50P-5


ME60P-2

Part No.				Adjustable Gauge	Manometer Adapter
Kit with Case	Gauge & Hose Only	Gauge & Hose Barb Connection	Gauge & 1/4" MNPT Connection		
ME60P-2	ME60P-5	—	ME60-2	Yes	ME1328 (3/8" OD) ME1331 (1/2" OD) ME1332 (5/8" OD)
ME50P-2	ME50P-5	ME50-2	ME50-2-01	No	


ME50P-2


ME1332

SERVICEMAN'S FRIEND

The serviceman's friend (METL051 & METL052) eliminates the hassle of carrying numerous bushing and fittings to each job site. It has three threads on one end with a hose barb and an 1/8" MNPT on the other end. A hose can easily be attached to either end and can be connected to a manometer or other flow meters to check line pressure on an appliance.

Part No.	Connection	Connection
METL051	5/16"-32 Male / 1/8" MNPT / 1/2" MNPT	Standard test hose fitting/1/8" MNPT
METL052	5/16"-32 Male / 1/8" MNPT / 1/4" MNPT	Standard test hose fitting/1/8" MNPT


METL051

LOW PRESSURE TEST BLOCK

Designed to test low pressure lines for system leaks. The factory installed check valve allows the line to be pressurized and adjusted to the desired test pressure.

MEJ610/30

Part No.	Inlet	PSIG
MEJ610/15	3/4" FNPT	0-15
MEJ610/30	3/4" FNPT	0-30
MEJ610/60	3/4" FNPT	0-60
MEJ610/100	3/4" FNPT	0-100

LEAK CHECK AND REGULATOR TESTING KITS

Intended for bobtail drivers who are trained to conduct out of gas leak check tests. The ME-SQTG Series gauge assembly give the service technician what is needed to test pressure regulators for flow set point and lock-up pressure in addition to leak check testing.

NOTE: Model number suffix A or B designates which type of pressure tap valve will be used. The A designates the type VA valve (Schrader) and B designates the type VB valve (1/4" flare).

MEQTG16B

MEQTG127A and MEQTG128B Dual Gauge Kits are used for leak check tests at intermediate pressure using the 30 PSI gauge and also leak check tests at tank pressure using the 300 PSI gauge and the high pressure test block supplied with the kit. The hose assembly connection to the system pressure tap valve incorporates a quick disconnect fitting to either pressure gauge. Kit includes six pressure tap valves, either type A or type B depending on which kit is specified.

MEQTG16A and MEQTG16B Dual Gauge Kits are used for leak check test at intermediate pressure using the 30 PSI gauge and testing first stage regulator. The 35" water column gauge is used for testing low pressure second stage regulator set point and lock up press

MESQTG4A and MESQTG4B Four Gauge Kits include a 30 PSI gauge, a 300 PSI gauge, a 5 PSI gauge, a 35" water column gauge, and a high pressure test block plus six pressure tap valves either type A or type B depending on which kit is specified. The hose quick disconnect allows for attachment of any one of the gauges. A leak check pressure tap valve can be anywhere in the system with the proper gauge attached for leak check testing. This kit also allows the service technician to test all pressure regulators, including the first stage, using the 30 PSI gauge, a 2 PSI regulator using the 5 PSI gauge, and low pressure 11' W.C. regulators or appliance manifold pressure using the 35" WC gauge.

MESQTG-4B

Part No.	Description
MEQTG127A	Dual Gauge Leak Check Kit - 30 and 300 PSI Gauges with Type A Valves (6)
MEQTG128B	Dual Gauge Leak Check Kit - 30 and 300 PSI Gauges with Type B Valves (6)
MEQTG16A	Dual Gauge Leak Check Kit - 30 PSI and 35" WC Gauges with Type A Valves (6)
MEQTG16B	Dual Gauge Leak Check Kit - 30 PSI and 35" WC Gauges with Type B Valves (6)
MESQTG-4A	Four Gauge Kits (Includes 5, 30, 300 PSI and 35" WC Gauges) with Type A Valves (6)
MESQTG-4B	Four Gauge Kits (Includes 5, 30, 300 PSI and 35" WC Gauges) with Type B Valves (6)

SAFETY TEST EQUIPMENT

REPLACEMENT GAUGES AND ADAPTERS

ME-AD-BA

Adapters		
Part No.	Description	
ME-AD-AB	Adapter - Connects Type A hose swivel connector to type B pressure tap valve	
ME-AD-BA	Adapter - Connects Type B hose swivel connector to type A pressure tap valve	
Gauges		
w/ 1/4" MNPT Connection	w/ Quick Disconnect Nipple	Description
MEJ501	ME-GA30N	0-30 PSI Bourdon tube gauge - 1/4" MNPT Inlet
MEJ600-02	ME-GA300N	0-300 PSI Bourdon tube gauge - 1/4" MNPT Inlet
ME50ECO-2	ME-A35WCN	35 inch water column, diaphragm capsule gauge
ME-GA5	ME-GA5N	5 PSI diaphragm capsule gauge

ME-GA30N

Made in the U.S.A.

GAUGE ASSEMBLIES AND VALVES

Intended for bobtail drivers who are trained to conduct out of gas leak check tests. The SQTG Series gauge assembly give the service technician what is needed to test pressure regulators for flow set point and lock-up pressure in addition to leak check testing.

NOTE: Model number suffix A or B designates which type of pressure tap valve will be used. The A designates the type VA valve (Schrader) and B designates the type VB valve (1/4" flare).

ME-TGA
or
ME-TGB

ME-TGA and ME-TGB Single Point Gauge Assemblies come with a 30 PSIG gauge and are used for leak check tests at intermediate pressure at outlet of first stage regulator or inlet to second stage regulator.

ME-KVA and ME-KVB Multi Point Kits are gauge assemblies with 30 PSI gauges and built in regulators that limit the pressure to the gauge to 12 PSI so the gauge can be used for leak check testing at intermediate pressure taps or at tank pressure using the high pressure test block. Kit includes twelve 1/8" NPT valves and six 1/4" NPT pressure tap valves.

ME-KVB

Part No.	Description	Pressure Setting
ME-TGA	Type A (Schrader) Single Point Gauge Assembly	30 PSIG
ME-TGB	Type B (1/4" Flare) Single Point Gauge Assembly	30 PSIG
ME-KVA	Type A Multi Point Test Kit	30 PSIG
ME-KVB	Type B Multi Point Test Kit	30 PSIG
ME-SKVA	Type A Universal Test Kit	35" WC
ME-SKVB	Type B Universal Test Kit	35" WC

ME-SKVA or ME-SKVB

ME-SKVA and ME-SKVB Universal Kits are gauge assemblies with 35" W.C. gauges and built-in regulators that limit the pressure to the gauge to 21" W.C. so the gauge can be used for leak check testing anywhere in the system. It can also be used to measure second stage, low pressure regulator set point and lock up pressure or appliance manifold pressure. Kit includes twelve 1/8 npt and six 1/4" NPT pressure tap valves.

SAFETY TEST EQUIPMENT

GAUGE ASSEMBLY PRESSURE TAP VALVES

ME-VB1

ME-VB2

ME-VA1

ME-VA2

Part No.	Description	Connection	Connection
ME-VA1	Type A Pressure Tap Valve	1/8" MNPT	Schrader
ME-VA2		1/4" MNPT	
ME-VB1	Type B Pressure Tap Valve	1/8" MNPT	1/4" Flare
ME-VB2		1/4" MNPT	
ME-HSA	Hose End Swivel Connector x Type A Pressure Tap Valve		
ME-HSB	Hose End Swivel Connector x Type B Pressure Tap Valve		

ME-HSA

PT-RVQA-90
1/4" Presto Tap adapter, 90°

PRESSURE TEST ACCESSORIES

These accessories are easily adaptable to industry standard pressure test equipment and provide a very reliable, inexpensive, permanent way to test both high and low pressure lines in domestic tank installations.

MEJ603HP

FEATURES

- Reliable method to test high and low pressure tap installations
- Provides an effective method to bleed vapor for pressure equalization and more accurate gauge readings
- Allows for an effective method to bleed vapor from the testing equipment prior to disconnect
- High quality liquid filled pressure gauge

Made in the U.S.A.

Part No.	Outlet	Inlet	PSIG	Factory Installed Vent Valve
MEJ602*	1/4" FNPT	1/4" MNPT	—	Yes
MEJ603LP	1/4" FNPT	1/4" MNPT	0-15	Yes
MEJ603HP	1/4" FNPT	1/4" MNPT	0-300	Yes
* Without gauge				

These accessories are intended for first stage regulators with pressure taps in either the upstream or downstream positions.

Part No. 1/4" Hose ID	Connection	Connection	Approx. Length
MER432-6	1/8" MNPT	1/4" FNPT	6"
MER432-12	1/8" MNPT	1/4" FNPT	12"

MER432 Series

Designed to provide an inexpensive way to permanently install a pressure tap upstream or downstream from the first stage regulator. The #54 orifice port provides controlled line pressure for more accurate readings and protects test equipment from pressure spikes while allowing easy installation of pressure test monitoring devices.

ME295-1

ME296-1

#54 Orifice

MEJ595

Part No. With Plug	Part No. Without Plug	Connection	Connection	Port Hole with #54 Orifice
ME295	ME295-1	Male Hard Nose POL	Female POL	1/8" FNPT
ME295SN	ME295SN-1	Male Soft Nose POL	Female POL	1/8" FNPT
ME296	ME296-1	1/4" MNPT	1/4" FNPT	1/8" FNPT
ME297	ME297-1	3/8" MNPT	3/8" FNPT	1/8" FNPT
ME298	ME298-1	1/2" MNPT	1/2" FNPT	1/8" FNPT
—	MEJ595	1/2" MNPT	1/2" FNPT	1/4" FNPT with no Orifice
ME299	ME299-1	3/4" MNPT	3/4" FNPT	1/8" FNPT

Part No.	Connection	Connection	Description
MEJ604	1/4" FNPT	1/8" MNPT	Extension

This check valve allows the line to be pressurized and adjusted to the desired pressure through the same valve.

NOTE: To help eliminate valve failure, the valve cap should remain on the valve when line is not be pressurized or adjusted. Any dirt, debris, water or other contaminants can potentially jam the valve or compromise the sealing surface causing the valve to leak.

Part No.	Connection	Connection	Thread Sealant
MEJ607-02	1/4" MNPT	5/16"-32 Male	No
MEJ608-02	1/8" MNPT	5/16"-32 Male	No
MEJ608B-02	1/8" MNPT	5/16"-32 Male	Yes

Part No.	Connection	Connection
ME10BTK-1-01	1/8" FNPT	5/16"-32 Female

	Part No.	Description
Acme Adapters	ME251-02	3-1/4" Acme Screen
	ME251-03	3-1/4" Acme Retaining Ring for Screen
Acme Gaskets	MEW4	1-1/4" Acme Flat Gasket for Motor Fuel
	MEW3	1-1/4" Acme Flat Gasket
	MEW2	1-3/4" Acme Flat Gasket
	MEW5	2-1/4" Acme Flat Gasket
	MEW6	3-1/4" Acme Flat Gasket
	MEW7	4-1/4" Acme Flat Gasket
Back Check Valves	ME868-16-05	Universal 1-1/4" - 2" Replacement Excela-Flange O-Ring
	ME870-6-06	3/4" Back Check Valves O-ring
	ME870-10-06	1-1/4" Back Check Valves O-ring
	ME870-16-06	2" Back Check Valves O-ring
	ME870-24-06	3" Back Check Valves O-ring
Bypass Valves (High Flow)	ME840-6K	3/4" & 1" High Flow Bypass Complete Repair Kit - Less Spring
	ME840-6SRK	3/4" & 1" High Flow Bypass Complete Seal Repair Kit
	ME840-8-108-60	3/4" & 1" High Flow Bypass Valve Replacement Spring 25-60 PSI (Blue)
	ME840-8-108-150	3/4" & 1" High Flow Bypass Valve Replacement Spring 50-150 PSI (Green)
	ME840-8-108-225	3/4" & 1" High Flow Bypass Valve Replacement Spring 100-225 PSI (Red)
	ME870-24-06	3/4" & 1" High Flow Bypass Valve Replacement Bonnet O-Ring
	ME840K	1-1/4" - 2" High Flow Bypass Complete Repair Kit - Less Spring
	ME840SRK	1-1/4" - 2" High Flow Bypass Seal Repair Kit
	ME840-16-108-40	1-1/4" - 2" High Flow Bypass Valve Spring 20-40 PSI (Blue)
	ME840-16-108-70	1-1/4" - 2" High Flow Bypass Valve Spring 41-70 PSI (Green)
	ME840-16-108-90	1-1/4" - 2" High Flow Bypass Valve Spring 71-90 PSI (Yellow)
	ME840-16-108-125	1-1/4" - 2" High Flow Bypass Valve Spring 91-125 PSI (Orange)
	ME840-16-108-150	1-1/4" - 2" High Flow Bypass Valve Spring 126-150 PSI (Red)
	ME868-16-05	1-1/4" - 2" Universal 4 Bolt Flange O-Ring
	ME840-16-109	1-1/4" - 2" Universal Bonnet O-Ring
	ME840-16-110	1-1/4" - 2" Universal Spring Guide O-Ring
	ME840-16-104	1-1/4" - 2" Universal Valve Poppet - Stainless Steel
	ME840C-16-104	1-1/4" - 2" Classic Style Valve Poppet - Stainless Steel
	ME840-24K	3" High Flow Bypass Complete Repair Kit - Less Spring
	ME840-24SRK	3" High Flow Bypass Seal Repair Kit
	ME840-24-105-75	3" High Flow Bypass Valve Spring 25-75 PSI
	ME840-24-105-100	3" High Flow Bypass Valve Spring 0-100 PSI
	ME840-24-105-200	3" High Flow Bypass Valve Spring 100-200 PSI
	ME904SK-24	3"-300# Bypass Valve Spiral Ring Flange Gasket - Carbon Steel
	ME980SK-24	3"-300# Bypass Valve Flange Stud Kit
Combination Valves	ME815K	Bonnet Assembly for ME830
Container Fill Valves	ME601-902	Replacement 1-3/4" F. Acme Cap w/ Lanyard - Plastic
	ME601-6SRK	Complete Seal Repair Kit For ME601-6 Fill Valve
	ME601-10SRK	Complete Seal Repair Kit For ME601-10 Fill Valve
	ME601-10-108	Replacement Nylon Body Gasket For ME601-10
	ME601-10-901	Replacement Molded Valve Poppet For ME601-10
Dispensing Filter (LPG/NH3 - High Flow)	ME680-8-ERK	1" High Capacity Replacement Filter Element Kit - includes element, o-rings & lubricant
Dispensing Valves (Quick-Acting)	ME800-HRK	ME800, ME810, and ME820 Series Handle Repair Kit

MEC Repair Parts

	Part No.	Description
ESV Emergency Shutoff Valves	ME980-903K	1-1/4"-3" ESV Cable Latch Assembly
	ME980-904K	1-1/4"-3" ESV Pneumatic Latch Assembly
	ME980-905	Universal Thermally Activated Remote Cable Release Mechanism
	ME980-905-25	Universal Thermally Activated Remote Cable Release Mechanism w/ 25' Cable
	ME980-905-50	Universal Thermally Activated Remote Cable Release Mechanism w/ 50' Cable
	ME980-906-25	Universal Remote Release Cable - 25'
	ME980-906-50	Universal Remote Release Cable - 50'
	ME980-907	Remote Thermally Activated Elbow 1/4" CC Inlet - For Pneumatic Latch Systems
	ME980HRK	1-1/4"-3" ESV Replacement Handle Assy.
	ME980PGA	1-1/4"-3" ESV Packing Gland Assembly
ESV Emergency Shutoff Valves	ME980-6K	3/4" - 1" ESV Complete Repair Kit
	ME980-6SRK	3/4" - 1" ESV Valve Seal Repair Kit
	ME980-6-902	ESV Valve Pneumatic Release Replacement Kit
	ME980-6-903	ESV Valve Cable Release Replacement Kit
	ME980-10-901	1-1/4" Replacement (ESV) & Back Check Valve Clapper Assy.
	ME980-16-901	2" Replacement (ESV) & Back Check Valve Clapper Assy.
	ME980-24-901	3" Replacement (ESV) & Back Check Valve Clapper Assy.
	ME980-10K	1-1/4" (ESV) Complete Valve Repair Kit
	ME980-16K	2" (ESV) Complete Valve Repair Kit
	ME980-24K	3" (ESV) Complete Valve Repair Kit
	ME980-10SRK	1-1/4" (ESV) Seal Repair Kit
	ME980-16SRK	2" (ESV) Seal Repair Kit
	ME980-24SRK	3" (ESV) Seal Repair Kit
Excelerator Internal Valves 1-1/4" Threaded	ME990-10-VRK	Excelerator 1-1/4" Internal Valve Rebuild Kit
	ME990-10-SRK	Excelerator 1-1/4" Internal Valve Seal Repair Kit
	ME990-10-PRK	Excelerator 1-1/4" - 1-1/2" Internal Valve Stem Packing Repair Kit
	ME990-10-PGA	Excelerator 1-1/4" - 1-1/2" Internal Valve Stem Packing Gland Assy.
	ME990-10-106-35	Excelerator 1-1/4" Internal Valve Excess Flow Spring - 35 GPM (Blue)
	ME990-10-106-55	Excelerator 1-1/4" Internal Valve Excess Flow Spring - 55 GPM (Green)
	ME990-10-106-85	Excelerator 1-1/4" Internal Valve Excess Flow Spring - 85 GPM (Orange)
	ME990-10-129	Excelerator 1-1/4" Internal Valve Manual Lever
	MEP147-01	1-1/4" Plated Steel Cable Connector Ring For 1-1/4"-3" Internal Valves
Excelerator Internal Valves 1-1/2" Threaded Tee Body	ME990-12-VRK	Excelerator 1-1/2" Internal Valve Complete Repair Kit
	ME990-12-SRK	Excelerator 1-1/2" Internal Valve Seal Repair Kit
	ME990-10-PGA	Excelerator 1-1/4" - 1-1/2" Internal Valve Packing Gland Assembly
	ME990-10-PRK	Excelerator 1-1/4" - 1-1/2" Internal Valve Stem Packing Repair Kit
	MEP147-01	Cable Connector Ring for 1-1/4" - 3" Excelerator™ Internal Valves
	ME990-10-129	Excelerator Manual Operating Lever
	ME990-160	Excelerator Universal Internal Valve Fusible Link - 212° F.
	ME992-12-106-45	Excelerator 1-1/2" Internal Valve Excess Flow Spring - 45 GPM (Orange)
Excelerator Internal Valves 1-1/2" Threaded Tee Body	ME992-12-106-60	Excelerator 1-1/2" Internal Valve Excess Flow Spring - 60 GPM (Red)
	ME992-12-106-85	Excelerator 1-1/2" Internal Valve Excess Flow Spring - 85 GPM (Yellow)
	ME992-12-106-110	Excelerator 1-1/2" Internal Valve Excess Flow Spring - 110 GPM (Purple)
	ME992-12-106-125	Excelerator 1-1/2" Internal Valve Excess Flow Spring - 125 GPM (Brown)

	Part No.	Description
Excelerator Internal Valves 2" & 3" Threaded & Threaded Tee Body	ME990-140	Excelerator 2"-3" Manual Operating Lever - Standard
	ME990-160	Universal Internal Valve Fusible Link 212 Degrees
	ME990-16-VRK	Excelerator 2" Internal Valve Rebuild Kit
	ME990-16-SRK	Excelerator 2" Internal Valve Seal Repair Kit
	ME990-24-VRK	Excelerator 3", 3"DF, 3"DFM Internal Valve Rebuild Kit
	ME990-24-SRK	Excelerator 3", 3"DF, 3"DFM Internal Valve Seal Repair Kit
	ME990-PRK	Excelerator 2" & 3" Internal Valve Stem Packing Repair Kit
	ME990-PGA	Excelerator 2" & 3" Internal Valve Stem Packing Gland Assy.
	ME990-16-106-110	Excelerator 2" Internal Valve Excess Flow Spring - 110GPM (Yellow)
	ME990-16-106-160	Excelerator 2" Internal Valve Excess Flow Spring - 160GPM (Green)
	ME990-16-106-260	Excelerator 2" Internal Valve Excess Flow Spring - 260GPM (Blue)
	ME990-106-175	Excelerator 3" Internal Valve Excess Flow Spring - 175GPM (Purple)
	ME990-106-250	Excelerator 3" Internal Valve Excess Flow Spring - 250GPM (Black)
	ME990-106-300	Excelerator 3" Internal Valve Excess Flow Spring - 300GPM (Green)
Excelerator Internal Valves 2" & 3" Threaded & Threaded Tee Body	ME990-106-375	Excelerator 3" Internal Valve Excess Flow Spring - 375GPM (Yellow)
	ME990-106-400	Excelerator 3" Internal Valve Excess Flow Spring - 400GPM (Red)
	ME990-106-475	Excelerator 3" Internal Valve Excess Flow Spring - 475GPM (Silver)
	ME990-106-500	Excelerator 3" Internal Valve Excess Flow Spring - 500GPM (White)
	MEP147-01	Cable Connector Ring for 1-1/4"-3" Internal Valves
Excelerator Internal Valves 3" Flanged & Double Flanged Off-Set	ME990-24-SRK	Excelerator Internal Valve Seal Repair Kit (less ME990-3F Series)
	ME990-24-VRK	Excelerator 3", 3DF, 3DFM Internal Valve Complete Rebuild Kit (less ME990-3F Series)
	ME990-3DF-121	Excelerator 3" Double Flange Self-Guiding Poppet Retaining Nut
	ME990-3DF-122	Excelerator 3" Double Flange Retaining Nut Roll Pin
	ME990-3DF-138	Excelerator 3" Double Flange Screen Mounting Post
	ME990-3DF-144	Excelerator 3" Double Flange Filter Screen Perforated - Stainless Steel
	ME990-3DF-145	Excelerator 3" Double Flange Filter Cap Perforated - Stainless Steel
	ME990-3DF-146	Excelerator 3" Double Flange Screen Mounting Post - Locknut
	ME990-3DF-148	Excelerator 3" Double Flange Stem Guide Bracket
	ME990-3DF-153	Excelerator 3" Single & Double Flange Internal Valve Inlet Flange Gasket - Stainless Steel
	ME990-3F-VRK	Excelerator 3" Single Flange Internal Valve Complete Rebuild Kit
	ME990-3F-SRK	Excelerator 3" Single Flange Internal Valve Seal Repair Kit
	ME990-3F-PRK	Excelerator 3" Single Flange Internal Valve Stem Packing Repair Kit
	ME990-3F-PGA	Excelerator 3" Single Flange Internal Valve Stem Packing Gland Assembly.
	ME990-3F-109	Excelerator 3" Single Flange Internal Valve Outlet Flange Gasket - Stainless Steel
	ME990-3F-110	Excelerator 3" Single Flange Internal Valve Mounting Stud (5-3/4" OAL B7 Xylan Coated)
	ME990-3F-24-140	Excelerator 3" Modi ied Single & Double Flange Manual Operating Lever - Short
	ME990-3F-24-150	Excelerator 3" & 4" Internal Valve Mounting Sleeve / Bushing
	ME990-PRK	Excelerator 2" & 3" Internal Valve Stem Packing Repair Kit (less ME990-3F Series)
	ME990-PGA	Excelerator 2" & 3" Internal Valve Packing Gland Assy. (less ME990-3F Series)

MEC Repair Parts

	Part No.	Description
Excelerator Internal Valves 3" Flanged & Double Flanged Off-Set	ME990-106-175	Excelerator 3" Internal Valve Excess Flow Spring - 175GPM (Purple)
	ME990-106-250	Excelerator 3" Internal Valve Excess Flow Spring - 250GPM (Black)
	ME990-106-300	Excelerator 3" Internal Valve Excess Flow Spring - 300GPM (Green)
	ME990-106-375	Excelerator 3" Internal Valve Excess Flow Spring - 375GPM (Yellow)
	ME990-106-400	Excelerator 3" Internal Valve Excess Flow Spring - 400GPM (Red)
	ME990-106-475	Excelerator 3" Internal Valve Excess Flow Spring - 475GPM (Silver)
	ME990-106-500	Excelerator 3" Internal Valve Excess Flow Spring - 500GPM (White)
	ME990-140	Excelerator 3" Manual Operating Lever - Standard
	ME990-151	3" Internal Valve Tank Side Mounting Stud 3-1/2" OAL B7
	ME990-160	Universal Internal Valve Fusible Link - 212° F.
	ME930-244	Excelerator 3" Double Flange Stem Guide Bracket Screw #10-32
	ME904SK-01	3" Modi ied Single & Double Flange Internal Valve Tank Side Mount Stud 3" OAL - B7
	ME904SK-02	3" Internal Valve Mounting Stud Standard Hex Nut 3/4-10 B8
	ME904S-3F-027	Excelerator 3" Double Flange Outlet/3" Modified Inlet Flange Gasket
	ME990-3DFO-102	Offset Stand-Off 1/2-13UNC-2A x 5/16-24UNF-2A x 1.67"OAL - SS
	ME990-3DFO-103	Offset Gland Plug 1-3/8-12UNF-2A x 1-5/8"HX - SS
	MEP147-01	Cable Connector Ring for 1-1/4" - 3" Internal Valves
Excelerator Internal Valves 4" Flanged	MEP990-4F	Manual Latch For 4" Internal Valves
	ME990-4F-VRK	Excelerator 4" Internal Valve Rebuild Kit
	ME990-4F-SRK	Excelerator 4" Internal Valve Seal Repair Kit
	ME990-4F-PRK	Excelerator 4" Internal Valve Stem Packing Repair Kit
	ME990-4F-PGA	Excelerator 4" Internal Valve Stem Packing Gland Assy.
	ME990-4F-146	Excelerator 4" Internal Valve Filter Screen Retain Bolt - 1/4-28
	ME990-4F-153	Excelerator 4" Internal Valve Inlet Flange Gasket
	ME990-4F-172	Excelerator 4" Internal Valve Outlet Flange Gasket
	ME990-4F-106-375	Excelerator 4" Internal Valve Excess Flow Spring - 375GPM (Cyan)
	ME990-4F-106-500	Excelerator 4" Internal Valve Excess Flow Spring - 500GPM (Black)
	ME990-4F-106-650	Excelerator 4" Internal Valve Excess Flow Spring - 650GPM (Green)
	ME990-4F-106-850	Excelerator 4" Internal Valve Excess Flow Spring - 850GPM (Yellow)
	ME990-4F-106-1250	Excelerator 4" Internal Valve Excess Flow Spring - 1250GPM (Red)
	ME990-4F-106-1500	Excelerator 4" Internal Valve Excess Flow Spring - 1500GPM (White)
	ME990-4F-144	Excelerator 4" Internal Valve Filter Screen Perforated - Stainless Steel
	ME990-4F-145	Excelerator 4" Internal Valve Filter Cap Perforated - Stainless Steel
	ME990-4F-162	Excelerator 4" Internal Valve Filter Screen/Cap #5 MESH
	ME990-4F-151	4" Internal Valve Mounting Stud 6-3/4"OAL B7 Xylan Coated
	ME990-152	3" Modified & 4" Internal Valve Mounting Stud Heavy Hex Nut 3/4-10 B8
	ME990-3F-24-150	3 & 4" Internal Valve Mounting Sleeve/Bushing
Excela-Flange Series Excess Flow Valves	MEP183-102	Replacement Torque Posts
External Pressure Relief Valves	MEPS-UT12X	Replacement Poly Cap for MEVS-PVE431 & 431B
	MEPS-431	1" FNPT Pipeaway Adapter for MEVS-PVE431 & 431B
	MEV250-015	MEV250 Series Stainless Steel Weep Hole Deflector
	MEV250-013	Relief Valve Dust Cap with Lanyard
Fill Check Adapters	ME571-06	Replacement Plastic Spacer Ring For ME571
	ME571-2-03	Replacement Nose Gasket For ME571

	Part No.	Description
Float Gauges (Accu-Max)	MES-1284-21-1	Universal ASME/DOT lift truck float gauge dial screw
	MES-1284-21-2	Junion float gauge head gasket
	ME930-905	ME930 Series 4" DOT Dial—Glow/Black
	ME930C-905	ME930 Series 4" DOT Dial—Silver/Black
	ME940-905	ME940 Series 8" ASME Dial—Glow/Black
	ME940C-905	ME940 Series 8" ASME Dial—Silver/Black
Flow Indicating Check Valve	ME981-901	1-1/4" - 3" Replacement Swing Check Indicator Dial
Fuse Plugs	ME205-013	1/8" MPT Thermal Safety Plug
	ME206-09	3/8 MPT Thermal Safety Plug 212 Deg
Gas Box	ME952-07	ME951 and ME952 Series Dust Cap
Globe & Angle Valves	ME815K	1/2", 3/4" & 1" Angle & Globe Valve Complete Bonnet Assembly
	ME815-10BRK	1-1/4" & 1-1/2" Angle & Globe Valve Complete Bonnet Assembly
	ME815-10SRK	1-1/4" & 1-1/2" Angle & Globe Valve Replacement Seal Repair Kit
	ME815-10/16HRK	1-1/4", 1-1/2" & 2" Angle & Globe Valve Replacement Handle & Retaining Nut
	ME815-16BRK	2" Angle & Globe Valve Complete Bonnet Assembly
	ME815IBC-16BRK	2" Angle & Globe Valve with Integrated Back Check Complete Bonnet Assembly
	ME815P-16BRK	2" Angle & Globe Valve with Pilot Complete Bonnet Assembly
	ME815-16SRK	2" Angle & Globe Valve Replacement Seal Repair Kit
	ME815IBC-16SRK	2" Angle & Globe Valve with Integrated Back Check Replacement Seal Repair Kit
	ME815P-16SRK	2" Angle & Globe Valve with Pilot Replacement Seal Repair Kit
	ME815-24BRK	3" Angle & Globe Valve Replacement Bonnet Assembly
	ME815-24SRK	3" Angle & Globe Valve Replacement Seal Kit
	ME815-24HRK	3" Angle & Globe Valve Replacement Handle Kit
	ME825-3F-BRK	3" Flanged Globe Valve Complete Bonnet Repair Kit
	ME825-3F-SRK	3" Flanged Globe Valve Seal Repair Kit
	ME825-4F-BRK	4" Flanged Globe Valve Complete Bonnet Repair Kit
	ME825-4F-SRK	4" Flanged Globe Valve Seal Repair Kit
Globe & Angle Valves	ME980SK-24	3" & 4"-300LB ESV & Globe Valve Flange Stud Kit
	ME904S-3F-027	3"-300 LB Spiral Ring Flange Gasket-Carbon Steel
	ME904S-4F-027	4"-300 LB Spiral Ring Flange Gasket-Carbon Steel
Hose Clamps	ME3162-08-02K	1 Pair 1/2" Hose Clamps & Bolts
	ME3162-12-02K	1 Pair 3/4" Hose Clamps & Bolts
	ME3162-16-02K	1 Pair 1" Hose Clamps & Bolts
	ME3162-20-02K	1 Pair 1-1/4" Hose Clamps & Bolts
	ME3162-24-02K	1 Pair 1-1/2" Hose Clamps & Bolts
	ME3162-32-02K	1 Pair 2" Hose Clamps & Bolts
Industrial Regulator MEGR-1133 Series	MEGR-1133H-01/05	2-5PSI Spring For MEGR-1133H Series
Hose End Holster	MEP801-03	MEP801 Series Black Urethane Holster Sleeve
	MEP801-04	MEP801 Series Black Urethane Holster Strap
Hose End Swivel	ME850SS-K	Seal Repair Kit
Hose End Valves	ME800-HRK	ME800 and ME800EXT Series Handle Repair Kit
	ME800-LSRK	ME800 Series Lower Seal Repair Kit
	ME800-SARK	ME800 Series Stem Assembly Repair Kit
	ME800-USRK	ME800 and ME800EXT Series Upper Seal Repair Kit
Industrial Regulator MEGR-164 Series	MEGR-164-03	Replacement Diaphragm for MEGR-164 Series
Industrial Regulator MEGR-198H Series	MEGR-198H-03	Replacement Diaphragm for MEGR-198H Series

MEC Repair Parts

	Part No.	Description
Industrial Regulator MEGR-CS1200 Series	MEGR-CS1200-02/25	1/4" Orifice For MEGR-CS1200 Series
	MEGR-CS1200-02/312	5/16" Orifice For MEGR-CS1200 Series
	MEGR-CS1200-02/38	3/8" Orifice For MEGR-CS1200 Series
	MEGR-CS1200-02/50	1/2" Orifice For MEGR-CS1200 Series
	MEGR-CS1200-01/6.5	3.5-6.5"WC Spring For MEGR-CS1200 Series (Red)
	MEGR-CS1200-01/14	6-14"WC Spring For MEGR-CS1200 Series (Green)
	MEGR-CS1200-01/33	12-33"WC Spring For MEGR-CS1200 Series (Orange)
	MEGR-CS1200-03	Replacement Diaphragm For MEGR-CS1200 Series
Industrial Regulator MEGR-S1202 Series	MEGR-S1202-02/50	1/2" Orifice For MEGR-S1202 Series
	MEGR-S1202-02/75	3/4" Orifice For MEGR-S1202 Series
	MEGR-S1202-02/100	1" Orifice For MEGR-S1202 Series
	MEGR-S1202-02/1187	1-3/16" Orifice For MEGR-S1202 Series
	MEGR-S1202-01/9	5-9"WC Spring For MEGR-S1202 Series (Black)
	MEGR-S1202-01/18	8.5-18"WC Spring For MEGR-S1202 Series (White)
	MEGR-S1202-01/30	14-30"WC Spring For MEGR-S1202 Series (Green)
	MEGR-S1202-01/2	1-2 PSI Spring For MEGR-S1202 Series (Blue)
	MEGR-S1202-01/3.25	1.5-3.25PSI Spring For MEGR-S1202 Series (Orange)
	MEGR-S1202-01/5	2-5PSI Spring For MEGR-S1202 Series (Yellow)
	MEGR-S1202-03	Replacement Diaphragm For MEGR-S1202 Series
Industrial Regulator MEGR-1289 Series	MEGR-1289-8-01/4.5	1-4.5 PSI Spring For MEGR-1289 1" Series (Pink)
	MEGR-1289-8-01/15	4-15 PSI Spring For MEGR-1289 1" Series (Red)
	MEGR-1289-8-01/20	10-20 PSI Spring For MEGR-1289 1" Series (Silver)
	MEGR-1289-8-01/50	15-50 PSI Spring For MEGR-1289 1" Series (Green)
	MEGR-1289-8-03	Replacement Diaphragm For MEGR-1289 1" Series
	MEGR-1289-16-01/18	7-18"WC Spring For MEGR-1289 2" Series (Blue)
	MEGR-1289-16-01/2.25	.5-2.25PSI Spring For MEGR-1289 2" Series (Grey)
	MEGR-1289-16-01/7	1.75-7 PSI Spring For MEGR-1289 2" Series (Green)
	MEGR-1289-16-01/10	4-10 PSI Spring For MEGR-1289 2" Series (Red)
	MEGR-1289-16-03	Replacement Diaphragm For MEGR-1289 2" Series
Industrial Regulator MEGR-1627 Series	MEGR-1627-01/20	5-20 PSI Spring For MEGR-1627 Series (Yellow)
	MEGR-1627-01/40	15-40 PSI Spring For MEGR-1627 Series (Green)
	MEGR-1627-01/95	10-95 PSI Spring For MEGR-1627Series (Blue)
	MEGR-1627-02/25	1/4" Aluminum Orifice For MEGR-1627 Series
	MEGR-1627-02/38	3/8" Aluminum Orifice For MEGR-1627 Series
	MEGR-1627-02/50	1/2" Alum Orifice For MEGR-1627 Series
	MEGR-1627-04	Vent Assembly For MEGR-1627 Series
	MEGR-1627-05	Adjusting Screw Cover - Plastic For MEGR-1627 Series
	MEGR-1627-03	Replacement Diaphragm For MEGR-1627 Series
	MEGR-1627-03R	Replacement Diaphragm For MEGR-1627R Series
Industrial Regulator MEGR-1630 Series	MEGR-1630-01/10	3-10 PSI Spring For MEGR-1630 Series (Red stripe)
	MEGR-1630-01/20	8-20 PSI Spring For MEGR-1630 Series (Olive drab)
	MEGR-1630-01/30	17-30 PSI Spring For MEGR-1630 Series (Silver)
	MEGR-1630-02/25	1/4" Orifice For MEGR-1630 Series
	MEGR-1630-02/38	3/8" Orifice For MEGR-1630 Series
	MEGR-1630-02/50	1/2" Orifice For MEGR-1630 Series
	MEGR-1630-04	Vent Assembly For MEGR-1630 Series
	MEGR-1630-03	Replacement Diaphragm For MEGR-1630 Series
Internal Valve Actuators	ME205-013	212° F. Thermal Safety Plug for ME205, ME205R, ME225, ME226, ME227, ME228, ME552, ME710
	ME206-09	212° F. Thermal Safety Plug for ME206, ME207, ME207SF, ME208SF

	Part No.	Description
Keys	ME530-03	ME530, ME531, ME532 and ME533 Series Key
	ME578-02	ME578 and ME600 Series Key
Liquid Withdrawal Adapters & Tank Valves	ME461	1-5/8" UNS Female Thread Replacement Cap and Gasket for ME460 & ME462
	ME461S	1-5/8" UNS Female Thread Replacement Cap and Gasket for ME462S
	ME461SS	1-5/8" UNS Female Thread Replacement Cap and Gasket for ME462SS
	ME458-03	ME458, ME460 and ME462 Series Nylon Gasket
	ME458-04	ME458 Series Nitrile O-ring
	MEP449S-101	ME449EXS/22 Replacement Protective Weather Boot
Low Pressure Test Kits	ME50-H	ME50P-2 and ME60P-2 Hose and Bell Assembly
	ME60P-2-01	ME60P-2 Screw Driver to Adjust Gauge
Manifold (Relief Valves)	ME904S-3F-027	Replacement Excelerator 3" Double Flange Outlet/3" Modified Inlet Flange Gasket
	ME904S-4F-027	Replacement 4" Modified Flange Flexatalic Gasket For ME904S-4F
	ME904SK	Quad-Port, 3/4-10UNC Mounting Stud Kit W/Nuts - 8Studs
	ME904SK-02	Replacement 3" Internal Valve Mounting Stud Standard Hex Nut 3/4-10 B8
	MEV125-109	Replacement Plastic Rain Cap for MEV125 Series Relief Valves - Black
Moto-Seal	ME795-3-02	Replacement Tip Seal
Multipurpose Withdrawal Valves	ME670-BRK	Replacement Bonnet Assembly for ME670, ME671, ME672 & ME673 Series Valves
	ME670-SRK	Replacement Seal Repair Kit for ME670, ME671, ME672 & ME673 Series Valves
	ME670-USRK	Replacement Upper Stem Seal Repair Kit for ME670, ME671, ME672 & ME673 Series Valves
	ME670-HRK	Replacement Handle Repair Kit for ME670, ME671, ME672 & ME673 Series Valves
	ME671IBC-BRK	Replacement Bonnet Assembly for ME671IBC Series Valves
	ME671IBC-SRK	Replacement Seal Repair Kit for ME671IBC Series Valves
	ME670-107	Replacement Data Plate for ME670DEX
	ME670-108	Replacement Data Plate for ME670DBC
Multi-Service ASME Container Vapor Valves	ME9101C1BRK	Complete ASME/DOT Valve Replacement Bonnet Assembly w/ Handwheel
	ME9101BRK	Replacement Universal Bonnet Repair Assembly, Less Handwheel - Fits all MEC Service Valves
	ME9101C1-102	ASME/DOT Replacement Service Valve Handwheel - Zinc
	ME9101P5BRK	Bonnet Repair Kit, 3/4"MNPT Motor Fuel Service Valve
	ME9101P5-109	Universal Replacement Handwheel Retaining Screw #10-32
	ME9101P5-114	Universal Replacement Service Valve Bonnet Seal
	MES-1901S	Replacement Handle for MES-PVE3250C, 3250CLG. ALG7T, ADT-7, CLM, 1427B, 1447B & 2035A Series Valves
	ME662-102	Replacement Handle for ME662, 665, MES-3329, 3250BC, 2034CLT, 1447C & 1449 Series Valves
Multi-Service ASME Container Vapor Valves	ME662-901K	Replacement Double Check Fill Valve Kit for ME662
	ME663	Replacement Double Check Vapor Return Valve 3/4" MNPT x 1-1/4" ACME
	MES-2030-100KIT	Fill Valve Repair Kit for MES-PVE2030BC Series Valves
	MES-3329-13LH-KIT	Replacement Bonnet Kit for MES-PVE3329, 3250BC, 2030BC, 2033CLT, 2034CLT, 1447C & 1449 Series Valves
	MES-3429-RK	Dual Bonnet O-Ring Repair Kit for MES-PVE2033CLDB, DLBD, 3250ALG7DB & 3329 Series Valves
O-rings	568-110-01	POL O-ring
	ME220M-02	Motor Fuel Service Valve ME220M O-ring
POL Adapters	ME1002A	Male Hard Nose POL x 1/4" MNPT—Tailpiece Only
	ME1002B	7/8" POL Nut
	ME1002BLH	1-1/8" POL Nut
	ME1600AH	POL Hex Brass Handwheel
	ME1600AR	POL Round Brass Handwheel
	ME1630-02	Plastic Handwheel for 7/8" POL Nut
	ME1630-03	Plastic Handwheel Spring

MEC Repair Parts

	Part No.	Description
POL Adapters	ME1002A	Male Hard Nose POL x 1/4" MNPT—Tailpiece Only
	ME1002B	7/8" POL Nut
	ME1002BLH	1-1/8" POL Nut
	ME1600AH	POL Hex Brass Handwheel
	ME1600AR	POL Round Brass Handwheel
	ME1630-02	Plastic Handwheel for 7/8" POL Nut
	ME1630-03	Plastic Handwheel Spring
POL Filler Couplings	ME390WR-1	6" Soft Nose Male Soft Nose POL with O-ring x 1/4" MNPT Stem—Brass
	ME390SWR-1	6" Soft Nose Male Soft Nose POL with O-ring x 1/4" MNPT Stem—Stainless Steel
	ME390-2H	.880 Left Handed Male Thread Extension with Forged Handle
Railcar ESV (Excelerator) High Flow	ME983-SRK	Excelerator High Flow Railcar ESV - Seal Repair Kit - Nitrile
	ME983-VRK	Excelerator High Flow Railcar ESV - Complete Valve Repair Kit - Nitrile
	ME983-119-150	Excelerator High Flow Railcar ESV - Replacement Excess Flow Spring 150 GPM (Black)
	ME983-119-250	Excelerator High Flow Railcar ESV - Replacement Excess Flow Spring 250 GPM (Black)
	ME983-119-500	Excelerator High Flow Railcar ESV - Replacement Excess Flow Spring 500 GPM (Black)
	ME983-121	Excelerator High Flow Railcar ESV - Replacement Quick Disconnect Nipple
Regulator Vent Kit (Flex-Vent)	ME900-6	90° Regulator Vent Assembly w/ Filter
	ME960-106	Hose Clamp
	ME960-107	Anchor Screw
Service Valves	ME9101BRK	MEC Universal Bonnet Replacement Assembly w/o Handwheel
	ME9101C1BRK	MEC 100LB. Service Valve Bonnet Assy. w/ Handwheel
	ME9101P5BRK	MEC Engine Fuel Service Valve Bonnet Assy. w/ Handwheel
	ME9101C1-102	Universal Replacement POL Service Valve Handwheel
	ME9101P5-105	Universal Replacement Motor Fuel Service Valve Handwheel
	ME9101P5-109	Replacement Handwheel Screw #10-32 - Stainless Steel
	ME9101P5-113	Replacement Engine Fuel Service Valve Name Plate
	ME9101P5-114	Universal Replacement Bonnet Seal - Nylon
Sight Flow Swing Check Valves	ME875S-16-05	ME875S-16 Glass
	ME875S-16-06	ME875S-16 Glass Gasket
	ME875S-16-07	ME875S-16 Nitrile O-ring Seal
	ME875S-24-05	ME875S-24 Glass
	ME875S-24-06	ME875S-24 Glass Gasket
	ME875S-24-07	ME875S-24 Nitrile O-ring Seal
Transfer Angle Valves	ME815K	ME449S and ME449EXS Series Bonnet Assembly
Toggle Valves (Quick-Acting)	ME791K	Non-Locking Series Bonnet Repair Kit
	ME792K	Locking Series Bonnet Repair Kit
TURBO-FLO LE Dry Break Transfer Valve	ME807CRK	ME807-16 Coupling Repair Kit
	ME807HRK	Handle Repair Kit for ME806,807 and 808 Series
	ME807SCRK	ME807S-16 Coupling Repair Kit
	ME807VRK	ME807-16 Valve Repair Kit
TURBO-FLO LE Shutoff Valve	ME807CRK	ME807-16 Coupling Repair Kit
	ME807HRK	Handle Repair Kit for ME806,807 and 808 Series
	ME807SCRK	ME807S-16 Coupling Repair Kit
	ME807VRK	ME807-16 Valve Repair Kit
TURBO-FLO LE Transfer Valve	ME185	3-1/4" Acme Dust Plug with Lanyard
	ME806CRK	ME806-16 Coupling Repair Kit
	ME807HRK	Handle Repair Kit for ME806,807 and 808 Series
	ME806VRK	ME806-16 Valve Repair Kit
Type I Filler Couplings	ME515-3	7" Male Hard Nose POL x 1/4" MNPT Stem—Brass
	ME516-1	6" Male Hard Nose POL x 1/4" MNPT Stem—Brass
	ME516S-01	6" Male Hard Nose POL x 1/4" MNPT Stem—Stainless Steel
	ME516-2H	1-5/16" F. Acme Extension with Forged Handle

	Part No.	Description
Type I Filler Couplings	ME515-3	7" Male Hard Nose POL x 1/4" MNPT Stem—Brass
	ME516-1	6" Male Hard Nose POL x 1/4" MNPT Stem—Brass
	ME516S-01	6" Male Hard Nose POL x 1/4" MNPT Stem—Stainless Steel
	ME516-2H	1-5/16" F. Acme Extension with Forged Handle
Wheel Chock Bracket	ME200B-103	Replacement Rubber Bumper Pad
	ME200EXT	Wheel Chock Block 6" Standoff Extension Kit
Vapor Equalizing Valves	ME663SRK	Replacement Upper Seal Repair Kit for ME663
Vapor Service Valves	ME663SRK	Replacement Upper Seal Repair Kit for ME663
	MES-1901S	MES-3250 Series Valve Shutoff Handwheel .375" ID x 2.00" OD - Aluminum
	MES-3250-8LH-KIT	Bonnet Assy Kit for MES-PVE3250 & 2035A Series
Y-Strainers	ME650-03/20	1/2" & 3/4" Y-Strainers 20 Mesh Screen
	ME650-03	1/2" & 3/4" Y-Strainers 40 Mesh Screen
	ME650-03/80	1/2" & 3/4" Y-Strainers 80 Mesh Screen
	ME652-03/20	1" Y-Strainer 20 Mesh Screen
	ME652-03	1" Y-Strainer 40 Mesh Screen
	ME652-03/80	1" Y-Strainer 80 Mesh Screen
	ME653-02/20	1-1/4" Y-Strainer 20 Mesh Screen
	ME653-02	1-1/4" Y-Strainer 40 Mesh Screen
	ME653-02/80	1-1/4" Y-Strainer 80 Mesh Screen
	ME654-03	1-1/2" Y-Strainer 40 Mesh Screen
	ME655-03/20	2" Y-Strainer 20 Mesh Screen
	ME655-03	2" Y-Strainer 40 Mesh Screen
	ME655-03/80	2" Y-Strainer 80 Mesh Screen
	ME656-03	3" Y-Strainer 40 Mesh Screen
	ME656-03/80	3" Y-Strainer 80 Mesh Screen
	ME656S-3F-109	Replacement 3" Filter Flange Gasket
	ME656S-3F-110	Replacement 3" Filter Flange O-Ring
	ME656S-3F-901	Replacement 3" Flange Y-Strainer Filter
	ME656-4F-108	Replacement 4" Filter Flange Gasket
	ME656-4F-110	Replacement 4" Filter Flange O-Ring
	ME656S-4F-901	Replacement 4" Flange Y-Strainer Filter
	ME980SK-16	2" -300LB Flange Stud & Nut Kit
	ME980SK-24	3" & 4"-300LB Flange Stud & Nut Kit
	ME980SK-16-103	2"-300 LB Flange Spiral Wound Gasket
	ME904S-3F-027	3"-300 LB Flange Spiral Wound Gasket
	ME904S-4F-027	4"-300 LB Flange Spiral Wound Gasket

Made in the U.S.A.

WARRANTY INFORMATION

WARNING

Marshall Excelsior's products are mechanical devices made of materials such as rubber and metal, and are subject to wear, the effects of contaminants, corrosion, and aging, and these devices will eventually become inoperative. **Regular inspection and maintenance is essential.** Marshall Excelsior's products have a long record of quality and service, and therefore LP-Gas dealers may forget hazards that can arise from using aging devices that have outlived their safe service life. The safe service life of these products will be affected by the environment and the conditions of their use. The LP-Gas dealer knows better than anyone what this environment and the conditions of use are.

There are developing trends in state legislation and proposed national legislation making the owner of products responsible for replacing products before they outlive their safe service life. LP-Gas dealers should be aware of such legislation as it affects them.

All Marshall Excelsior products must be installed, inspected and maintained by a trained and experienced professional adhering to all installation instructions, product and safety warnings, local, state, and federal regulations, codes and standards and any other standards set by, but not limited to, NFPA, DOT or ANSI.

LP-Gas is a highly explosive and lammable gas that should never be vented near a possible ignition source.

LIMITED WARRANTY

THIS WARRANTY for Marshall Excelsior manufactured products is provided by Marshall Excelsior, Inc., 1506 George Brown Drive, Marshall, MI 49068. Marshall Excelsior, unless otherwise specified in writing, warrants to the original buyer that for a period of five (5) years from the date of manufacture its products and repair kits will be free from defects in material and workmanship under normal service and use. This warranty covers manufacturing defects only, and does not cover defects and product non-compliance due to, misuse, alteration, neglect, accident, fire, or other external causes, alterations, or repairs. This limited warranty also does not cover normal wear and tear. During this warranty period, if a defect arises in the product, and you follow the instructions for returning the product, Marshall Excelsior will, at its option, to the extent permitted by law, either (i) repair the product using either new or refurbished parts, (ii) replace the product with a new or refurbished product that is equivalent to the product that is to be replaced, or (iii) refund to you all or part of the purchase price of the product. This limited warranty applies to the extent permitted by law, to any repair, replacement part or replacement device for the remainder of the original warranty period or for ninety (90) days whichever period is longer. All replaced parts and products for which a refund is given shall become the property of Marshall Excelsior. This is the only warranty or representation made by Marshall Excelsior, and the sole basis for liability respecting quality, performance, defects, repair, delivery, and replacement of products and repair kits. The foregoing shall constitute Marshall Excelsior's sole liability.

Marshall Excelsior does not warrant any product or part that has been altered, accidentally damaged, disassembled, modified, misused, neglected, not properly maintained or installed. Marshall Excelsior does not warrant cosmetic issues including but not limited to dents, scratches, product discoloration, color fading or any other imperfection that does not affect the functionality of the product.

Marshall Excelsior does not warranty any product or part not installed according to Marshall Excelsior's installation instructions or installed in violation of any regulation or warning by state, local, or federal regulators, or in violation of any standard or code set by, but not limited to, NFPA, DOT or ANSI requirements. The foregoing shall constitute Marshall Excelsior's sole liability to distributors, vendees and end users.

K&A PRODUCTD LIMITED WARRANTY

Marshall Excelsior warrants K&A products and repair kits to the original buyer to be free of defects in material and workmanship under normal service and use for one year from manufactured date

LIMITATIONS

TO THE EXTENT PERMITTED BY LAW, THE WARRANTY AND REMEDIES SET FORTH ABOVE ARE EXCLUSIVE AND IN LIEU OF ALL OTHER WARRANTIES AND REMEDIES, AND MARSHALL EXCELSIOR SPECIFICALLY DISCLAIMS ALL STATUTORY OR IMPLIED WARRANTIES, INCLUDING, BUT NOT LIMITED TO, WARRANTIES OF MERCHANTABILITY, FITNESS FOR A PARTICULAR PURPOSE AND AGAINST HIDDEN OR LATENT DEFECTS. IF MARSHALL EXCELSIOR CANNOT LAWFULLY DISCLAIM STATUTORY OR IMPLIED WARRANTIES, THEN TO THE EXTENT PERMITTED BY LAW, ALL SUCH WARRANTIES SHALL BE LIMITED IN DURATION TO THE DURATION OF THIS EXPRESS LIMITED WARRANTY AND TO REPAIR OR REPLACEMENT AND SERVICE.

MARSHALL EXCELSIOR IS NOT RESPONSIBLE FOR DIRECT, SPECIAL, INCIDENTAL OR CONSEQUENTIAL DAMAGES RESULTING FROM ANY BREACH OF WARRANTY OR UNDER ANY OTHER LEGAL THEORY.

MARSHALL EXCELSIOR'S LIABILITY (EXCEPT AS TO TITLE) ARISING OUT OF THE SALE, USE OR OPERATION OF PRODUCTS OR REPAIR KITS, WHETHER ON CLAIMS FOR BREACH OF WARRANTY, CONTRACT, NEGLIGENCE OR OTHERWISE (INCLUDING CLAIMS OF CONSEQUENTIAL OR INCIDENTAL DAMAGES) SHALL NOT IN ANY EVENT EXCEED THE COST OF FURNISHING OR REPLACEMENT OF THE DEFECTIVE PRODUCT OR REPAIR KIT.

WARRANTY CLAIMS AND NOTICE

Warranty claims shall be made in writing to Marshall Excelsior's Home Office at 1506 George Brown Drive, Marshall, Michigan 49068 by the distributor, vendee or end user within twenty (20) days of discovery of the defect and the product must be postmarked and shipped F.O.B. origin to Marshall Excelsior's Home Office within thirty (30) days of the discovery of the defect. Marshall Excelsior will not accept any products or repair kits that does not have a Return Material Authorization (RMA) number from the Home Office in Marshall, Michigan. After Marshall Excelsior has inspected the product and deemed the product to be defective, at its discretion, Marshall Excelsior will repair, replace or refund the purchase price of the defective product or repair kit. If the buyer does not comply with the above stated requirements the buyer will waive unconditionally and absolutely any and all claims arising out of the alleged defect.

CONTINUED ON NEXT PAGE

WARRANTY INFORMATION

COMPLIANCE

Marshall Excelsior manufactures all of our products to the highest industry standards. All of our products meet or exceed the requirements of the Compressed Gas Association (CGA), the National Fire Protection Association (NFPA), American National Standards Institute (ANSI), American Society of Mechanical Engineers (ASME) or Underwriters Laboratories, Inc. (UL) where indicated.

PRODUCT CHANGES

Marshall Excelsior reserves the right to change product specifications at any time. We are constantly evaluating our products and incorporating engineering advances to ensure our products perform and comply with changes in market conditions, government mandates, and code changes. Marshall Excelsior shall not be required to modify any equipment already sold or in service.

FILTERS

Marshall Excelsior develops products to be used in a debris, dirt and contamination free system. Installing an in-line filter may be necessary in a system that contains unclean product or when the system contains debris, dirt, scale, rust or other contaminates.

PRODUCT AGE

Marshall Excelsior products are mechanical devices that are subject to wear, contaminants, corrosion, and aging of components made of materials such as rubber and metal. Over time these devices will eventually become inoperative. The safe service life of these products will reflect the environment and conditions of use that they are subjected to. **Regular inspection and maintenance is essential**. Marshall Excelsior products have a long record of quality and service, so LP-Gas dealers may forget hazards that can arise from using aging devices that have outlived their safe service life. The length of a device's life is determined by the environment in which it is used, and the LP-Gas dealer knows better than anyone about this environment.

There are developing trends in state legislation and proposed national legislation making the owner of products responsible for replacing products before they outlive their safe service life. LP-Gas dealers should be aware of such legislation as it affects them.

To determine the product's age, check the product for a date code consisting of a series of letters and numbers.

A = January	B = February	C = March
D = April	E = May	F = June
G = July	H = August	I = September
J = October	K = November	L = December

Example:

H 04 18 = August 4, 2018

Month Manufactured

Day Manufactured

Year Manufactured

NOTE: Internal relief valves feature a different date code system.

FIR

A 18 21

Month Manufactured

Year Manufactured

Serial Number

SIR/ EXTERNAL RELIEF VALVES

A 25 18 01

Month Manufactured

Day Manufactured

Year Manufactured

Serial Number

APPLIANCE REGULATORS FOR 2 PSI SYSTEMS

OARA Regulators

The 1/2" and 3/4" regulators include an approved vent limiter for indoor installations. The 1 1/4" must be vented to the outside.

ITEM #	CAPACITY	INLET	OUTLET	OUTLET PRESSURE
44-1-190004*	368,000	1/2"	1/2"	7-11"LP, Set @ 11"
44-1-290003*	741,000	3/4"	3/4"	7-11"LP, Set@ 11"
44-1-1900002*	270,000	1/2"	1/2"	7-11"NG, Set@8"
44-1-2900002*	509,000	3/4"	3/4"	7-11"NG, Set@8"
M325-7-11/4	900,000	1 1/4"	1 1/4"	11"

These regulators are designed to accept an inlet pressure of 2#.

Accessories: Maxicap-3 Cover for 1/2" Regulator Maxicap-5 Cover for 3/4" Regulator

13A15 Vent Limiter Cap, Cover for 1/2"Regulator
13A15-5 Vent Limiter Cap, 3/4" Regulator

(*Must be installed in the horizontal position)

N5 SERIES GAS REGULATOR

The N5 Series gas regulator is a certified CSA 6.22/ANSI Z21.80 self-operating regulator with vent limiting option for use in residential, commercial and industrial applications. The NS vent limiting option allows for indoor use without the need to pipe external vent lines. With the added benefit of extended corrosion resistance the NS allows for various applications where the best regulation performance is required.

ITEM #	CAPACITY	INLET	OUTLET	OUTLET PRESSURE
N5B-0500-S	638,000	1/2"	1/2"	7-11" LP
N5B-0750-S	638,000	3/4"	3/4"	7-11" LP
N5B-0500-S	1,013,000	1/2"	1/2"	7-11" NG
N5B-0750S	1,013,000	3/4"	3/4"	7-11" NG
N5C-1250-S	1,077,000	1 1/4"	1 1/4"	7-11" LP
N5C-1250-S	1,710,000	1 1/4"	1 1/4"	7-11" NG
VE0375	Vent Limiter Elbow for N5B Series Regulators			
VE0500	Vent Limiter Elbow for N5C Series Regulators			

Capacities are based on 2 psig inlet pressure. Inlet pressure can be up to 15 psig, but 2 psig is the maximum inlet in order to retain CSA certification.

VE0375 & VE0500 Vent Limiter Elbow allows these regulators to also be mounted vertically while maintaining a horizontal position of the vent limiting device.

OUTDOOR GRILL/APPLIANCE REGULATORS

TVL202

This UL Listed regulator by Rotarex offers greater flexibility with your outdoor installations. The TVL202 has a BTU capacity of 140,000 BTU's. The TVL202 comes with the QCC adaptor installed as shown.

Hose assemblies sold separately.

ASCPL1

Grill Hose Assembly - 3/8" F. Flare x QCC, 14' oal. For Nat and LP vapor. 1/2 psig maximum pressure. For outdoor use only.

I5LTC24GRQC

Description: 3/8" x 12' 5 Piece Nat/LP Quick Connect Grill Hose Assembly.

REGULATOR ADAPTERS

ME2131
INVERTED FLARE PLUG

Keeps dirt and foreign material from entering changeover assemblies.

ME2132

Adapter with screen 1/4" INV flare x 1/4" MNPT converts NPT inlet to inverted flare inlet.

ME1002K

1/4" Inverted flare nut for venting regulators in underground installations.

OPD, SERVICE VALVES & RELIEF VALVES

OPD VALVES

OVERFILL PROTECTION DEVICE (OPD) VALVE

Automatically shuts off flow of all gas when cylinder is filled to the proper volume.

Part #	Fits Cylinder	Diptube (inches)
V21113	5# and 11# squat	3.0"
V21130	10# and standard 11#	3.6"
150360	20# Steel, Dial Ready	4.0"
150361	30# Steel, Dial Ready	4.7"
82-8017	20# Steel	4. 0"
82-8012	30# Steel	4.7"
PV3004A	30# Aluminum	6.0"
82-8013	40# Steel	6.4"
PV4004A	40# Aluminum	7. 0"

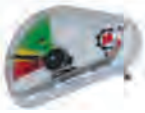

150362 - Dial for 150360 and 150361

QCC / OPD VALVE CAPS

B88C

QCC dust cover w/ strap. Fits 1-5/16" Acme Threads on Type 1 QCC Cylinder Valves. Packaged 50 per bag.

Tear Off Cylinder Valve Cap

PV9001GB - Blue Cap
PV9001GHRA - Red Cap
PV9001GHOR - Orange Cap

POL CONNECTION VALVES

80-5016-10.6

Valve for 100# cylinder. Equipped with 10.6" fixed liquid level gauge.

Use R20-1 & R20-2 to remove & install

MOTOR FUEL INTERNAL RELIEF VALVES

ITEM#	SIZE	DISCHARGE PSIG
66-1135	1"	250
66-1242	1"	312
66-1127	1"	375

MEH503

Adjustable Relief Valve Cap
3/4" to 1-1/4" - Vinyl

These covers are intended to protect both internal & external relief valves ranging in size from 1/2" to 1-1/4" NPT from moisture and/ or other possible contaminants. Using our universal "shower cap" style relief valve covers will allow technicians to carry two sizes that will protect the majority of domestic tank relief valves.

Features:

- Made with durable UV stable yellow vinyl material
- Fits 1/2" to 1-1/4" NPT internal and external relief valves

Part No.	Description	Material
MEH503	Adjustable Relief Valve Cover 3/4" to 1-1/4"	Yellow Vinyl

DOMESTIC TANK RELIEF VALVES

INTERNAL SPRING RELIEF VALVES

250 psig for 250-1000 gallon tanks

Part #	Inlet	Tank Size	Capacity CFM Air	Replacement Cap
66-1128	3/4"	250 gal	1970	10.0.950.0203
66-1129	1"	500 gal	2510	10.0.950.0204
66-1130	1 1/4"	1000 gal	4370	10.0.950.0205
66-1135	1"	Vert 120	987	10.0.110.5032

FILLER VALVES

D1134

Locking cap for 1 3/4" ACME filler valves.

66-1261

66-1262

INTEGRATED FILLER VALVES

- Double back-check filler valve with integral emergency shut-off ball valve: ALL-IN-ONE SOLUTION.
- Both these valves are double back check filler valves where there are:
  (1) a soft seated upper back check, and
  (2) a metal-to-metal lower back check seat.
- Eliminate the need for installing expensive and un-reliable filler hose adapter as a temporary fix to a failed or leaky filler valve.
- Permits safe filler valve maintenance without tank evacuation.
- These two versions can be used either for underground or above ground.

RELIEF VALVES FOR LARGE ASME TANKS

BPS FLANGE TYPE FULL INTERNAL RELIEF VALVE

For 3" modified and 4" flanges. Replacement for AC&F relief valves. Two required on 30,000 gal. tank.

Part #	Mfg.	Tank Conn.	SCFM Capacity	Pipeaway Thread Size
4MBF-A-250	BPS	3" Modified or 4" Range	15452	4" FNPT

37-0005-02A - Gasket sold separately
37-0007-01 - 4", 300# Gasket sold separately

RELIEF VALVE STACK RAINCAPS

Protection for vertical relief valve riser pipes.

Part #	Pipe Size
RC300-06	3/4"
RC300-08	1"
RC300-16	2"
RC300-20	2 1/2"
RC300-24	3"

NEEDLE VALVES

BRASS NEEDLE VALVES

Part#	Size
VA108	1/8" MPT x 1/8" MPT

LOG LIGHTER VALVES

Part#	Description	Material
L102-803	1/2" Straight Valve	Chrome
L102-804PB	1/2" Straight Valve	Brass
L102-813	1/2" Angle Valve	Chrome
L102-814PB	1/2" Angle Valve	Brass
L102-827	10" Brass Key	

AIR LINE, VALVES, TUBING & FITTINGS

Item No.	Description
**MEP980PN-113	1/4" OD Black DOT Tubing
*WR1924-01	1/4" OD Black DOT Tubing
WRSPMT-4	1/4" OD Union
WR1170-4-4	1/4" OD Tee
WR1168X4	1/4" OD x 1/8" MPT Adapter
WR1168X4X4	1/4" OD x 1/4" MPT Adapter
WR1169X4	1/4" OD x 1/8" MPT 90° Adapter
WR1169X4X4	1/4" OD x 1/4" MPT 90° Adapter

** Rated for LPG Vapor, Nitrogen or Dry Air
* Not rated for LPG

AIR LINE VALVES

6451000

Flip Lever Air Valve. 1/8" inlet & outlet

IEST146749

Push/Pull Air Valve 1/8" inlet & outlet

BAV030

3 way, 2 position air valve with mounting bracket. Compression fitting inlet & outlet

CA-PB

Heavy duty air valve mounted in a weatherproof enclosure. Quick connect inlet & outlet

QUICK ACTING HOSE END VALVES

SQUIBB-TAYLOR AL424

Special Quick Acting Acme Filling Minimum bleed Coupling and Valve

A special locking clip on a spring actuated locking handle minimizes the chance of accidental opening. By locating the seat disc in the bottom of the filler coupling, the AL343P minimizes leakage when disconnecting. Ball bearings in the seat disc assembly allow the entire assembly to rotate when the disc touches the seat. This helps prevent wear and cutting of the disc, giving longer service life.

QUICK JAW MINIMUM LOSS HOSE END VALVE

Intended for LP-Gas or NH3 hose end service, these Minimum Bleed Low Emmision valves are available with an angle body. They minimize LP-Gas or NH3 release when disconnecting by locating the seat disc in the bottom of the filler coupling, which saves you money while protecting the environment.

A special locking clip or a spring actuated locking handle minimizes the chance of accidental opening.

Designed for longer service life with ball bearings installed in the seat disc assembly allow the entire assembly to rotate when the disc touches the seat. This helps prevent wear and cutting of the disc. The operating handle can also be rotated to any position without cutting the seat.

Part #	Inlet	Outlet
AL424	3/4"	1-3/4" F. Acme
AL363	1"	1-3/4" F. Acme Quick Jaw

QUICK ACTING HOSE END VALVES (CONTINUED)

GASGUARD GG1E

Minimum Bleed Gasoline Style motor fuel dispensing nozzle. Safety features: must be connected to a filler valve to open. Cannot be disconnected from filler valve while lever is in open position.

INLET: 3/4" FNPT
OUTLET: 1-3/4" Acme

GG-5L GG Style Nozzle Locking Clip
(NOTE: Use of GG-5L VIODS UL Listing)

GASGUARD GG20

Minimum Bleed Gasoline Style motor fuel dispensing nozzle. Safety features: must be connected to a filler valve to open. Cannot be disconnected from filler valve while lever is in open position.

INLET: 3/4" FNPT
OUTLET: 1-3/4" Acme

GG-5L GG Style Nozzle Locking Clip
(NOTE: Use of GG-5L VOIDS UL Listing)

STAUBLI GPV14

Minimum Bleed Gasoline Style motor fuel dispensing nozzle. Safety features: must be connected to a filler valve to open. Cannot be disconnected from filler valve while lever is in open position.

INLET: 3/4" FNPT
OUTLET: 1-3/4" Acme

GG-5L is **NOT** compatible with the GPV14
**** Locking Non-UL version available by special order.***

BALL VALVES

JOMAR BALL VALVES

Inexpensive 2-piece forged full port brass valve for vapor or liquid service (400 psig WOG)

Part#	Size
J100-701	1/4"
J100-702	3/8"
J100-703	1/2"
J100-704	3/4"
J100-705	1"
J100-706*	1 1/4"
J100-707*	1 1/2"
J100-708*	2"
J100-710	3"

* Add "H" to part # for locking handle

BALL VALVES, continued

JOMAR BALL VALVE REPAIR PARTS

Part#	Description
J899-701	1/4" Handle Only
J899-701N	Nut for 1/4" Handle
J899-704	3/4" Handle Only
J899-705	1" & 1-1/4" Handle Only
J899-705N	Nut for 1" Handle
J899-708	2" Handle Only
J899-918	2" Repair Kit for J500-308
J899-906	1 1/2" Handle Only

MALE X FEMALE BALL VALVE

ITEM#	SIZE
S92B42	1/4" MXF

JOMAR UNION END BRASS FULL PORT BALL VALVES

Same as J100 series but has built in union on one end.

Part#	Size
J160-102	3/8"
J160-103	1/2"
J160-104	3/4"
J160-105	1"

JOMAR CARBON STEEL DOUBLE UNION BALL VALVE

Part #	Size
J100-996	1 1/4"
J100-997	1 1/2"
J100-998	2

JOMAR CARBON STEEL BALL VALVE

Part #	Size
J100-956	1 1/4"
J100-957	1 1/2"
J100-958	2

JOMAR "BOLTED" 3 PIECE BALL VALVE

Full port - black or stainless steel

Part #	Size	Material
J500-306	1 1/4"	Stainless
J500-406	1 1/4"	Black
J500-307	1 1/2"	Stainless
J500-407	1 1/2"	Black
J500-308	2"	Stainless
J500-408	2"	Black

BALL VALVES - LOW PRESSURE

We stock valves manufactured by Jomar. The Jomar valves have a "T" style handle that can be removed and reversed to lock the valve.

FNPT X HOSE BARB

Part#	Size	Carton Qty.	Side Tap
L102-413	1/2" FNPT x 1/8" MNPT/Hose Barb	10	NO

FNPT X FNPT

Part#	Size	Carton Qty.	Side Tap
J101-402	3/8" FNPT	12	NO
J101-403	1/2" FNPT	12	NO
J101-404	3/4" FNPT	12	NO
L102-105	1" FNPT	12	NO
J102-302	3/8" FNPT	10	YES
J102-303	1/2" FNPT	10	YES
J102-304	3/4" FNPT	10	YES

FNPT X FLARE

Part#	Size	Carton Qty.	Side Tap
J101-502	1/2" FNPT x 3/8" FL	14	NO
J101-503	1/2" FNPT x 1/2" FL	14	NO
L102-118	3/4" FNPT x 1/2" FL	10	NO
L101-504	3/4" FNPT x 5/8" FL	10	NO

MNPT X FLARE

Part#	Size	Carton Qty.	Side Tap
J101-702	1/2" MNPT x 3/8" FL	12	NO
J101-703	1/2" MNPT x 1/2" FL	12	NO

FLARE X FLARE

Part#	Size	Carton Qty.	Side Tap
J101-601	3/8"FL x 1/2" FL	12	NO
J101-602	3/8" FL x 3/8" FL	12	NO
J101-603	1/2"FL x 1/2" FL	12	NO
J101-604	5/8" FL x 5/8" FL	12	NO
J102-402	3/8" FL x 3/8" FL	10	YES
J102-403	1/2" FL x 1/2" FL	12	YES
J102-404	5/8" FL x 5/8" FL	10	YES

DIELECTRIC FNPT X FNPT

Part#	Size	Carton Qty.	Side Tap
J101-403DU	1/2"	8	NO
J102-313DU	1/2"	8	YES
J101-404DU	3/4"	8	NO
J102-314DU	3/4"	8	YES

BALL VALVES - LOW PRESSURE, CONTINUED

DIELECTRIC FNPT X FLARE

Part#	Size	Carton Qty.	Side Tap
J101-513DU	1/2"	8	NO
J102-413DU	1/2"	8	YES

DIELECTRIC MNPT X FNPT

Part#	Size	Carton Qty.	Side Tap
J101-803DU	1/2"	8	NO
J102-303DU	1/2"	8	YES
J101-804DU	3/4"	8	NO
J102-304DU	3/4"	8	YES

DIELECTRIC MNPT X FLARE

Part#	Size	Carton Qty.	Side Tap
J101-703DU	1/2"	8	NO
J102-403DU	1/2"	8	YES

VALVE GREASE

QVA126

2 oz. tube of Graphite Valve Grease

LOCK WING METER VALVES

LOCK WING METER VALVES

Part#	Size
J240-003B	1/2"
J240-004B	3/4"

8509910 BARRELL LOCK

Locks Meter Stop Valves.

8610005 KEY

Extra Key for 8509910 Lock.

3 WAY VALVE

BE3L-06
3 Way Valve

3/4" bottom entry 3 way positive shut off valve. Rated to 350 psi. Body is nickel-plated forged brass.

DORMONT APPLIANCE CONNECTORS

DORMONT APPLIANCE CONNECTORS

- Flexible stainless steel
- AGA listed for indoor or outdoor use
- Now available with high temperature black epoxy coating for hearth applications

HEATER CONNECTORS

1/4" ID - 3/8" OD

Part #	Length	NPT Connections
*D10-2122-12	12"	3/8" MXF
*D10-2122-18	18"	3/8" MXF
*D10-2122-24	24"	3/8" MXF
*D10-2122-36	36"	3/8" MXF
D10-2122-48	48"	3/8" MXF
D10-2122-60	60"	3/8" MXF

*Add an "A" after D10 for black epoxy, i.e., D10A-2122-XX, up to 36".

DRYER AND FURNACE CONNECTORS

3/8" ID - 1/2" OD

Part #	Length	NPT Connections
*D20-3132-12	12"	1/2" MXF
*D20-3132-18	18"	1/2" MXF
*D20-3132-24	24"	1/2" MXF
*D20-3132-36	36"	1/2" MXF
D20-3132-48	48"	1/2" MXF
D20-3132-60	60"	1/2" MXF
D20-3132-72	72"	1/2" MXF

*Add an "A" after D20 for black epoxy, i.e., D20A-3122-XX, up to 36".

DOMESTIC RANGE CONNECTORS

1/2" ID - 7/8" OD

Part #	Length	NPT Connections
D30-3132-12	12"	1/2" MXF
D30-3132-24	24"	1/2" MXF
D30-3132-36	36"	1/2" MXF
D30-3132-48	48"	1/2" MXF
D30-4141-24	24"	3/4" MXM
D30-4141-48	48"	3/4" MXM
D30-4142-12	12"	3/4" MXF
D30-4142-24	24"	3/4" MXF
D30-4142-36	36"	3/4" MXF
D30-4142-48	48"	3/4" MXF

GRAY PVC COATED TANKLESS WATER HEATER CONNECTOR

Part #	Length	NPT Connections
D41-4142-24	24"	3/4" MXF
D41-4242-24	24"	3/4" FXF
D41-4141-24	24"	3/4" MXM
D41-4142-36	36"	3/4" MXF
D41-4242-36	36"	3/4" FXF
D41-4141-36	36"	3/4" MXM

DORMONT APPLIANCE CONNECTORS, continued

COMMERCIAL CONNECTORS

Commercial connectors come with quick disconnect and are rated for restaurant service.

Part #	Length	NPT Connections
D1650BPQ36	36"	1/2" MXM
D1650BPQ48	48"	1/2" MXM
D1675BPQ36	36"	3/4" MXM
D1675BPQ48	48"	3/4" MXM

DOMESTIC WHISPERFLEX HEATER CONNECTORS

3/8" - 1/2" Black Coated

This durable, corrosion-resistant stainless steel gas connector is configured with pipe threaded fittings for installation. Engineered for high BTU applications, noise disruptors have been added to provide silent gas flow in high volume gas applications. Designed with safety in mind, this CSA approved gas connector is commonly used for the installation of home appliances such as gas logs and space heaters.

Part #	Length	NPT Connections
D10ANW213112	12"	3/8" MXF
D10ANW213118	18"	3/8" MXF
D10ANW213124	24"	3/8" MXF
D20ANW313212	12"	1/2" MXF
D20ANW313218	18"	1/2" MXF
D20ANW313224	24"	1/2" MXF

ORINGS

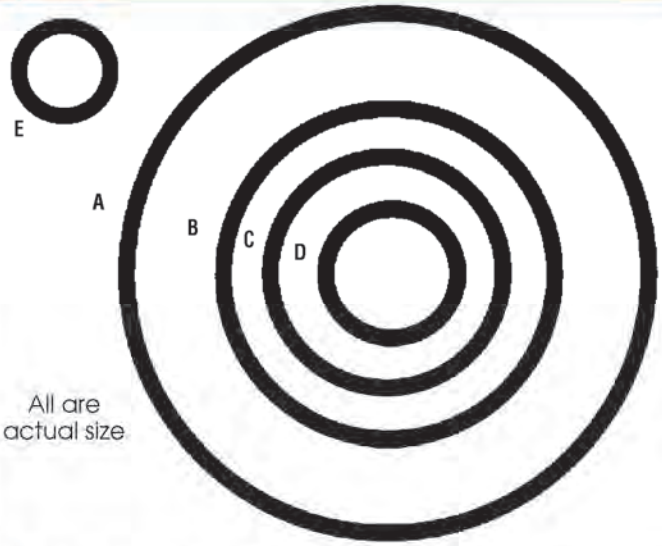

All are actual size

	Part #	Description
A	1H2917	3 1/4" ACME O-ring. Replaces flat washer used on 3 1/4" ACME filler valves.
B	T12655	2 1/4" ACME O-ring. Replaces flat washer used on 2 1/4" ACME vapor return and filler valves.
C	1E8124-O	1 3/4" ACME O-ring. Replaces flat washer used on 1 3/4" ACME filler valves.
D	T11673	Slippery O-ring. Internal O-ring for lift truck safety check connectors. Also used as emergency POL seal.
E	T12945	POL O-ring. Fits POL cylinder filling connector.

GASKETS

All are actual size.

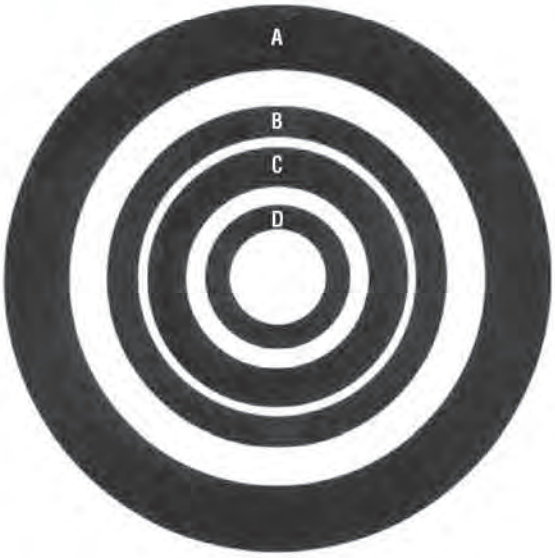

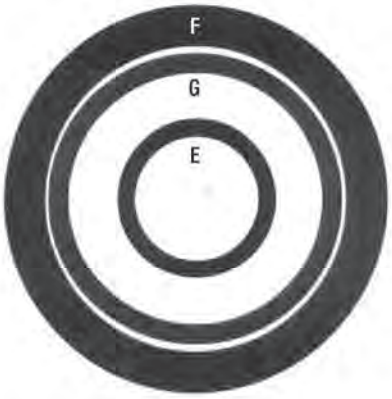

	Part #	Description
A	1E8128	3 1/4" ACME tank truck filler valve washer
B	1E8126	2 1/4" ACME tank truck vapor return washer
C	1E8124	1 3/4" ACME standard bulk tank filler valve and lift truck valve washer
D	1E8122	1 1/4" ACME standard bulk tank vapor return valve washer
E	*R7141M-3	1 1/4" ACME flat washer for use on lift truck cylinder safety check connectors
F	VISSGG	Senior gauge washer
G	VISJGG	Junior gauge washer

*Also available as an o-ring R7141M3-O

QUICK DISCONNECT COUPLINGS

HIGH AND LOW PRESSURE COUPLINGS

Item #	Description
*EF276190	1/4" FNPT X 1/4" MNPT
EF276187	3/8" FNPT X 3/8" MNPT

*High pressure - up to 250 psi

LOW PRESSURE COUPLINGS

Item #		
Socket	Plug	Size
H100-006	H100-506	3/8"
H100-008	H100-508	1/2"
H100-010	H100-510	3/4"
H100-012	H100-512	1"

TYPE 2 COUPLINGS

Male Quick-disconnect by 1/4" MNPT Plug

EF276281

Connects the grill regulator to a quick-disconnect cylinder valve.

EF276328

Same as **EF276281** but it has a check valve.

EF276330

Quick-Disconnect Adapter for Standard POL Valves.

*Includes 1/4" Male Plug

EF276329

FPOL x plug nipple filling adapter for using a POL filler coupling to fill through a type 2 quick disconnect valve.

HOSE COUPLINGS FOR QW HOSE

Item #	Hose I.D.	Connection
A4QW-A-CPLG	3/16"	Female 1/4" O.D. Flare
A6QW-A-CPLG	5/16"	Female 3/8" O.D. Flare
A8QW-A-CPLG	13/32"	Female 1/2" O.D. Flare
A10QW-A-CPLG	1/2"	Female 5/8" O.D. Flare
A12QW-A-CPLG	5/8"	Female 3/4" O.D. Flare
A4412-4-6	5/16"	Male 1/4" NPT
ME8346	5/16"	Female 1/4" FPT
A6QW-A-90CPL	5/16"	Female 3/8" O.D. Flare (90°)
A8QW-A-90CPL	13/32"	Female 1/2" O.D. Flare (90°)
A6QW-A-45CPL	5/16"	Female 3/8" O.D. Flare (45°)
A8QW-A-45CPL	13/32"	Female 1/2" O.D. Flare (45°)

HOSE ACCESSORIES

HOSE COUPLINGS

SWIVEL HOSE ADAPTER UNIONS

Tapered nose in swivel end makes up a tight metal to metal ground joint union with standard male pipe hose couplings.

Size	Female x Male Swivel	Female x Female Swivel
1/4"	A2045-4-4	A2046-4-4
1/2"	A2045-8-8	A2046-8-8
3/4"	A2045-12-12	A2046-12-12
1"	A2045-16-16	A2046-16-16
1-1/4"	A2045-20-20	A2046-20-20
1-1/2"	A2045-24-24	A2046-24-24
2"	A2045-32-32	A2046-32-32

QW HOSE COUPLING WITH HYDROSTATIC RELIEF CONNECTION

ME8346

5/16" I.D. X 3/8" O.D.
Female Flare Swivel X 1/4" FNPT
Allows hydrostatic relief valve to be installed at safest, most protected position. The MHC8346 has a 3/4" female flare swivel on the tank valve end. The opposite end is a two piece reusable hose fitting for 5/16" I.D. stainless steel braid LP hose.

FERRULE CRIMPING TOOLS

These tools are used to make low pressure hose assemblies only.

TL855 CRIMPING TOOL

5 Hole crimping tool. 1/4" -3/8" ID.

BRASS HOSE FERRULES

Item #	Inside Diameter	Hose ID	Fits Dayco, Goodall
ME7325	.562"	1/4"	
ME7326	.593"	1/4"	Dayco
ME7327	.625"	1/4"	Dayco/ Thermoid
ME7328	.656"	1/4"	Goodall
ME7332*	.781"	3/8"	Dayco & Goodall

*Fits Dayco and Goodall bulk hose.

COMPRESSION FITTINGS

COMPRESSION NUTS

Item #	Description
61A	1/8" Compression Nut
61B	3/16" Compression Nut
61C	1/4" Compression Nut
61D	5/16" Compression Nut
61E	3/8" Compression Nut

COMPRESSION SLEEVES

Item #	Description
60A	1/8" Compression Sleeve
60B	3/16" Compression Sleeve
60C	1/4" Compression Sleeve
60D	5/16" Compression Sleeve
60E	3/8" Compression Sleeve

FLARED FITTINGS - SAE 45° FLARE

FLARE NUT (FORGED)

Item #	Flare
NS4C	1/4"
NS4E	3/8"
NS4F	1/2"
NS4I	5/8"
NS4K	3/4"

REDUCING FLARE NUT (FORGED)

Item #	Flare x Flare
NRS4EC	3/8" x 1/4"
NRS4FE	1/2" x 3/8"
NRS4IF	5/8" x 1/2"

COUPLINGS *

FLARE TO MALE PIPE THREAD

* Add "L" prefix to part number for a long coupling

Item #	Flare x MPT
48CA	1/4" x 1/8"
48CC	1/4" x 1/4"
48CE	1/4" x 3/8"
48CF	1/4" x 1/2"
48EA	3/8" x 1/8"
48EC	3/8" x 1/4"
48EE	3/8" x 3/8"
48EF	3/8" x 1/2"
48EK	3/8" x 3/4"
48FC	1/2" x 1/4"
48FE	1/2" x 3/8"
48FF	1/2" x 1/2"
48FK	1/2" x 3/4"
48IF	5/8" x 1/2"
48IK	5/8" x 3/4"
48KF	3/4" x 1/2"
48KK	3/4" x 3/4"

FLARED FITTINGS

FLARE TO FLARE

Item #	Flare x Flare
42C	1/4" x 1/4"
42E	3/8" x 3/8"
42F	1/2" x 1/2"
42I	5/8" x 5/8"
42K	3/4" x 3/4"

FLARED FITTINGS (CONTINUED)

Flare to Female Pipe Thread

Item #	Flare x FPT
46CC	1/4" x 1/4"
46EC	3/8" x 1/4"
46EE	3/8" x 3/8"
46EF	3/8" x 1/2"
46EK	3/8" x 3/4"
46FC	1/2" x 1/4"
46FE	1/2" x 3/8"
46FF	1/2" x 1/2"
46FK	1/2" x 3/4"
46IE	5/8" x 3/8"
46IF	5/8" x 1/2"
46IK	5/8" x 3/4"
46KF	3/4" x 1/2"
46KK	3/4" x 3/4"

REDUCING COUPLINGS

Flare to Flare

Item #	Flare x Flare
42EC	3/8" x 1/4"
42FC	1/2" x 1/4"
42FE	1/2" x 3/8"
42IE	5/8" x 3/8"
42IF	5/8" x 1/2"
42KF	3/4" x 1/2"

Flare to Flare

Item #	Flare x Flare
55C	1/4" x 1/4"
55E	3/8" x 3/8"
55F	1/2" x 1/2"
55I	5/8" x 5/8"
55K	3/4" x 3/4"
55FE	1/2" x 3/8"
55IE	5/8" x 3/8"
55IF	5/8" x 1/2"

FORGED ELBOWS*

Flare to Male Pipe Thread

Item #	Flare x MPT
49CA	1/4" x 1/8"
49CC	1/4" x 1/4"
49CE	1/4" x 3/8"
49EC	3/8" x 1/4"
49EE	3/8" x 3/8"
49EF	3/8" x 1/2"
49EK	3/8" x 3/4"
49FC	1/2" x 1/4"
49FE	1/2" x 3/8"
49FF	1/2" x 1/2"
49FK	1/2" x 3/4"
49IE	5/8" x 3/8"
49IF	5/8" x 1/2"
49IK	5/8" x 3/4"
49KK	3/4" x 3/4"

*** For 45° elbow, substitute 47 for 49 in the item number**

Flare to Female Pipe Thread

Item #	Flare x FPT
54CC	1/4" x 1/4"
54EC	3/8" x 1/4"
54EE	3/8" x 3/8"
54EF	3/8" x 1/2"
54EK	3/8" x 3/4"
54FC	1/2" x 1/4"
54FE	1/2" x 3/8"
54FF	1/2" x 1/2"
54FK	1/2" x 3/4"
54IE	5/8" x 3/8"
54IF	5/8" x 1/2"
54IK	5/8" x 3/4"

FORGED CONNECTORS

Swivel Connector

Item #	Flare
US4C	1/4"
US4E	3/8"
US4F	1/2"
US4I	5/8"
US4K	3/4"

PLUGS AND CAPS

Flare Fitting Plug

Item #	Flare
P2C	1/4"
P2E	3/8"
P2F	1/2"
P2I	5/8"
P2K	3/4"

FLARED FITTINGS (CONTINUED)

Flare Caps

Item #	Flare
N5C	1/4"
N5E	3/8"
N5F	1/2"
N5I	5/8"
N5K	3/4"

FORGED TEES
Flare to Flare to Male Pipe Thread

Item #	Flare X MPT
45EEC	3/8" x 1/4"
45EEE	3/8" x 3/8"
45EEF	3/8" x 1/2"
45FFE	1/2" x 3/8"
45FFF	1/2" x 1/2"
45IIF	5/8" x 1/2"

Flare to Flare to Flare

Item #	Flare
44C	1/4"
44E	3/8"
44F	1/2"
44I	5/8"
44K	3/4"

FORGED REDUCING TEES
Flare to Flare to Flare

Item #	A	B	C
44EEF	3/8"	3/8"	1/2"
44EEI	3/8"	3/8"	5/8"
44FEE	1/2"	3/8"	3/8"
44FEF	1/2"	3/8"	1/2"
44FFE	1/2"	1/2"	3/8"
44FFI	1/2"	1/2"	5/8"
44IFF	5/8"	1/2"	1/2"
44IFI	5/8"	1/2"	5/8"
44IIE	5/8"	5/8"	3/8"
44IIF	5/8"	5/8"	1/2"

FORGED CROSS

Item #	Flare
C1E	3/8"
C1F	1/2"
C1I	5/8"

FLARED FITTINGS (CONTINUED)

SEAL BONNETS

Item #	Tubing O.D. Size
B1C	1/4"
B1D	3/8"
B1E	1/2"
B1F	5/8"
B1I	3/4"

COPPER REFRIGERATION TUBING

Part #	Coil Length	O.D. Size
Y02X50	50'	1/4"
Y03X50	50'	3/8"
Y03X100	100'	3/8"
Y04X50	50'	1/2"
Y04X100	100'	1/2"
Y05X50	50'	5/8"
Y05X100	100'	5/8"

TYPE K COPPER TUBING

Part #	Coil Length	I.D. Size
YK02X60	60'	1/4"
YK02X100	100'	1/4"
YK03X60	60'	3/8"
YK03X100	100'	3/8"
YK04X60	60'	1/2"
YK04X100	100'	1/2"

GAS-TEC COATED COPPER TUBING

Coating identifies the tubing as a gas line. Easy to install and cost efficient.

Part #	Coil Length	O.D.Size
13850	50'	3/8"
138100	100'	3/8"
11250	50'	1/2"
112100	100'	1/2"
15850	50'	5/8"
158100	100'	5/8"
*28510	100'	1/4"
*28560	60'	1/4"
*28610	100'	3/8"
*28660	60'	3/8"
*28710	100'	1/2"
*28760	60'	1/2"

*Yellow Coated Type K

TUBING/TOOLS

J TUBING CLIPS

Part #	O.D. Size
419-3/8-1/2	3/8", 1/2"
419-5/8	5/8"

COPPER TUBING BENDERS

Part #	O.D.Size
LC630E	3/8"
LC630F	1/2"
LC630I	5/8"

NP512 ROTHENBERGER (PAPCO) TUBE CUTTER

Replacement Part #	Description
NP512CW	Cutting Wheel
NP51250	Cutting Wheel Pin
NP51240	Retaining Ring
NP51211	Triangle Reamer

NP420 ROTHENBERGER (PAPCO) SWING RELEASE FLARING TOOL

ROL945TH ROLO-FLAIR FLARING TOOL

FSPIN100 FLARING KIT

The FSPIN100 kit contains a 1/4", 3/8", 1/2" & 5/8" flaring bits

FSPIN100 is designed to work with drills and/or screwdrivers, with a minimum of 1,800 RPM and 500 Watts or more for corded drills, and 18 Volts or more for cordless drills.

Using an innovative technology, the ORIGINAL Flaring SPINs are a new concept in piping tools, ready to quickly flare/expand any copper tube, in just a few seconds.

BRASS PIPE FITTINGS

BUSHINGS

Part #	MNPT	FNPT
B110CA	1/4"	1/8"
B110EA	3/8"	1/8"
B110EC	3/8"	1/4"
B110FA	1/2"	1/8"
B110FC	1/2"	1/4"
B110FE	1/2"	3/8"
B110KC	3/4"	1/4"
B110KF	3/4"	1/2"
B110MK	1"	3/4"

COUPLERS

Part #	FNPT	FNPT
B103C	1/4"	1/4"
B103E	3/8"	3/8"

BRASS NIPPLES

Part #	MNPT	Length
B122AA	1/8"	Close w/ hex
B122CC	1/4"	Close w/ hex
B113C	1/4"	Close
B113C11/2	1/4"	1 1/2"
B113C2	1/4"	2"
B113C21/2	1/4"	2 1/2"
B113C3	1/4"	3"
B122EE	3/8"	Close w/ hex
B113E2	3/8"	2"
B113F11/2	1/2"	1 1/2"
B113F2	1/2"	2"
B113F3	1/2"	3"
B113F4	1/2"	4"
B113F5	1/2"	5"
B113F6	1/2"	6"
B113K11/2	3/4"	1 1/2"
B113K2	3/4"	2"
B113K5	3/4"	5"

PLUGS

Part #	MNPT
B121C	1/4"
B121E	3/8"

BRASS & STEEL PIPE FITTINGS

BRASS PIPE FITTINGS

ADAPTERS
Female to Male

Part #	FNPT	MNPT
B120CA	1/4"	1/8"
B120EC	3/8"	1/4"

CROSSES

Part #	FNPT
B102C	1/4"
B102F	1/2"

STREET TEE

Part #	Size
B105A	1/8"

TEES

Part #	FNPT
B101A	1/8"
B101C	1/4"
B101E	3/8"
B101F	1/2"
B101K	3/4"

ELBOWS

Part #	FNPT
B100C	1/4"
B100E	3/8" (3000psi)
B100F	1/2"
B100K	3/4"

STREET ELBOWS

Part #	NPT
B116A	1/8"
B116C	1/4"
B116E	3/8"

(Forged Brass)

STANDARD AND EXTRA HEAVY PIPE NIPPLES

PIPE SIZING CODE

PIPE I.D.	CODE (**)
1/8"	01
1/4"	02
3/8"	03
1/2"	04
3/4"	06
1"	08
1 1/4"	10
1 1/2"	12
2"	16
3"	32

PIPE LENGTH	CODE (##)
CLOSE	0
1 1/2"	15
2"	20
2 1/2"	25
3"	30
3 1/2"	35
4"	40
4 1/2"	45
5"	50
Etc.	Etc.

SCHEDULE 80 EXTRA HEAVY PIPE NIPPLES

Item #	Pipe Sizes	Lengths
N**X##	1/4" -3"	Close - 12"

- Example - 1/2" x 3" nipple would be N04X30

SCHEDULE 40 BLACK & GALVANIZED* MALLEABLE PIPE NIPPLES

Item #	Pipe Sizes	Lengths
40N**X##B	3/8" - 1 1/4"	Close - 12"

- Example - 1/2" x 3" nipple would be 40N04X30B

* Change 'B' to 'G' for galvanized.

STANDARD AND EXTRA HEAVY PIPE NIPPLES

SCHEDULE 40 GALVANIZED PIPE NIPPLES

Item #	Pipe Sizes	Lengths
40N**X##G	3/8" - 1 1/4"	Close - 12"

- Example - 1/2" x 3" nipple would be 40N04X30G

CONCENTRIC SWAGE NIPPLES

Item #	Sizes
S**X**	1/2" - 3" x 1/4" - 2 1/2"

- Example - 3/4" x 1/2" nipple would be S06X04

SCHEDULE 40 & SCHEDULE 80 BLACK PIPE

SCHEDULE 40		SCHEDULE 80	
Item #	SIZES	ITEM#	SIZES
Z**40	3/8" - 3"	Z**80	1/2" - 3"

- Schedule 40 pipe comes threaded and coupled
- Add CW to the part number for coated and wrapped pipe (Special Order)

PIPE THREADER

RIGID 700 PIPE THREADER

PIPE WRAP

PW100

2" x 100', 10 mil pipe wrap

- Corrosion protection for pipe.
- For use on underground pipe installations.

Approximate Coverage

2" Pipe - 1 roll covers approximately 12' of pipe.
1 1/4" Pipe - 1 roll covers approximately 18' of pipe.
3/4" Pipe - 1 roll covers approximately 26' of pipe.

THREADED FLANGE

FT24X16

3" Flange x 2" FPT
Gasket: T10561

FLEX GASKET KITS:

Includes bolt, nut and gasket
BGN-10, 1 1/4"
BGN-16, 2"
BGN-24, 3"
BGN-32, 4"

DIELECTRIC (INSULATED) UNIONS

PART #	SIZE FPT
J701-403	1/2"
J701-404	3/4"
J701-405	1"
J701-406	1 1/4"
J701-407	1 1/2"
J701-408	2"
100-7575-000	Galvanized 3/4"

These Dielectric Unions are rated as Schedule 40.

PIPE FITTINGS

FORGED STEEL PIPE FITTINGS, 2000# AND 3000# THREADED


45° Elbow


90° Elbow


90° Street Elbow


Coupling


Tee


Cross


Hex Head Plug


Union

ITEM	1/4"	3/8"	1/2"	3/4"	1"	1 1/4"	1 1/2"	2"	3"
45° Elbow	E02452	E03452	E04452	E06452	E08452	E10452	E12452	E16452	E24452
90° Elbow	E02902	E03902	E04902	E06902	E08902	E10902	E12902	E16902	E24902
90° Street Elbow	ES02903	ES03903	ES04903	ES06903	ES08903	ES10903	ES12903	ES16903	
Coupling	C023	C033	C043	C063	C083	C103	C123	C163	C243
Tee	T022	T032	T042	T062	T082	T102	T122	T162	T242
Cross	X022	X032	X042	X062	X082	X102	X122	X162	X242
Hex Head Plug	HP02	HP03	HP04	HP06	HP08	HP10	HP12	HP16	HP24
Union	U023	U033	U043	U063	U083	U103	U123	U163	U243

FORGED STEEL BUSHINGS

MALE PIPE THREAD (A)

FEMALE PIPE THREAD (B)	1/4"	3/8"	1/2"	3/4"	1"	1 1/4"	1 1/2"	2"	3"
1/8"	B02X01	B03X01	B04X01	B06X01	B08X01	B10X01	B12X01	B16X01	B24X01
1/4"		B03X02	B04X02	B06X02	B08X02	B10X02	B12X02	B16X02	B24X02
3/8"			B04X03	B06X03	B08X03	B10X03	B12X03	B16X03	B24X03
1/2"				B06X04	B08X04	B10X04	B12X04	B16X04	B24X04
3/4"					B08X06	B10X06	B12X06	B16X06	B24X06
1"						B10X08	B12X08	B16X08	B24X08
1 1/4"							B12X10	B16X10	B24X10
1 1/2"								B16X12	B24X12
2"									B24X16

FORGED STEEL REDUCERS

FEMALE PIPE THREAD (A)

FEMALE PIPE THREAD (B)	1/4"	3/8"	1/2"	3/4"	1"	1 1/4"	1 1/2"	2"	3"
1/8"	CR02X01	CR03X01	CR04X01	CR06X01	CR08X01	CR10X01	CR12X01	CR16X01	CR24X01
1/4"		CR03X02	CR04X02	CR06X02	CR08X02	CR10X02	CR12X02	CR16X02	CR24X02
3/8"			CR04X03	CR06X03	CR08X03	CR10X03	CR12X03	CR16X03	CR24X03
1/2"				CR06X04	CR08X04	CR10X04	CR12X04	CR16X04	CR24X04
3/4"					CR08X06	CR10X06	CR12X06	CR16X06	CR24X06
1"						CR10X08	CR12X08	CR16X08	CR24X08
1 1/4"							CR12X10	CR16X10	CR24X10
1 1/2"								CR16X12	CR24X12
2"									CR24X16

SCHEDULE 40 STANDARD REDUCING COUPLINGS (BLACK OR GALVANIZED)

For galvanized couplings, substitute suffix G for B in part number.

PART #	SIZE
40CR04X03B	1/2" X 3/8"
40CR06X04B	3/4" X 1/2"
40CR08X04B	1" X 1/2"
40CR08X06B	1" X 3/4"

*Replace suffix B with G for Galvanized

SCHEDULE 40 STANDARD REDUCING 90° ELBOW (BLACK OR GALVANIZED)

For galvanized elbow, substitute suffix G for B in part number.

PART #	SIZE
40ER06X04B	3/4" X 1/2"
40ER08X04B	1" X 1/2"
40ER08X06B	1" X 3/4"
40ER10X08B	1 1/4" X 1"

*Replace suffix B with G for Galvanized

SCHEDULE 40 BUSHINGS (BLACK OR GALVANIZED)

For galvanized bushings, substitute suffix G for B in part number.

MALE PIPE THREAD (A)

FEMALE PIPE THREAD (B)	3/8"	1/2"	3/4"	1"	1 1/4"
1/4"	40B03X02B	40B04X02B	40B06X02B	40B08X02B	40B10X02B
3/8"		40B04X03B	40B06X03B	40B08X03B	40B10X03B
1/2"			40B06X04B	40B08X04B	40B10X04B
3/4"				40B08X06B	40B10X06B
1"					40B10X08B

PIPE FITTINGS

PIPE FITTINGS

STANDARD SCHEDULE 40 PIPE FITTINGS (BLACK OR GALVANIZED)

For galvanized fittings, substitute suffix G for B in part number.

ITEM	1/4"	3/8"	1/2"	3/4"	1"	1 1/4"	1 1/2"	2"
45° Elbow	40E0245B	40E0345B	40E0445B	40E0645B	40E0845B	40E1045B	40E1245B	40E1645B 90°
Elbow	40E0290B	40E0390B	40E0490B	40E0690B	40E0890B	40E1090B	40E1290B	40E1690B 90°
Street Elbow	40ES0290B	40ES0390B	40ES0490B	40ES0690B	40ES0890B	40ES1090B	40ES1290B	40ES1690B
Coupling	40CP02B	40CP03B	40CP04B	40CP06B	40CP08B	40CP10B	40CP12B	40CP16B
Union	40U02B	40U03B	40U04B	40U06B	40U08B	40U10B	40U12B	40U16B
Tee	40T02B	40T03B	40T04B	40T06B	40T08B	40T10B	40T12B	40T16B
Cap	40C02B	40C03B	40C04B	40C06B	40C08B	40C10B	40C12B	40C16B
Plug	40SP02B	40SP03B	40SP04B	40SP06B	40SP08B	40SP10B	40SP12B	40SP16B

*Replace suffix B with G for Galvanized

SMART-HOSE ASSEMBLIES

Smart-Hose TECHNOLOGIES

Lifeline 3 incorporates an internal coated cable connected to normally unseated "Valve Flappers" located on each end of the cable. In the event of hose separation, coupling ejection or catastrophic hose failure the "Valve Flappers" are released and instantly seat, stopping the flow of product in both directions.

Part #	Size
R05016800180	2" FNPT x 15' with integral break-away coupling
R05016330180	2" FNPT x 15' (Bulk Plant - Not DOT Approved)
R05016330222	2" FNPT x 18.5' (DOT approved for transports)
R05016800222	2" FNPT x 18.5' with integral break-away coupling

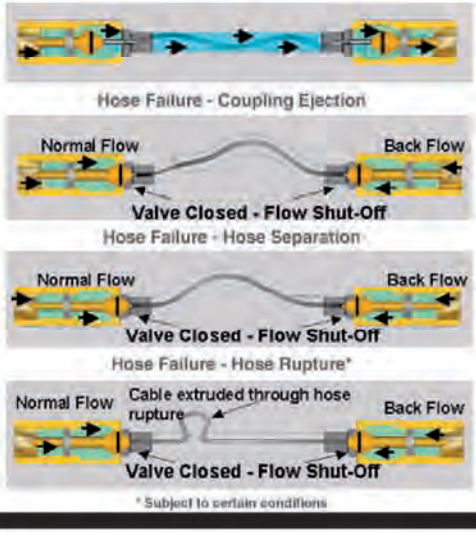

BULK HOSE & HOSE ASSEMBLIES

GOODALL BULK HOSE

High Pressure Rubber LP-Gas Hose
- Minimum burst pressure - 1750 psig
- Working pressure - 350 psig
- UL listed
- Two braid
- Delivered in bulk hose reels or specified cut length

Item #	I.D. (in.)	O.D. (in.)	Crimp on Coupling #	App. Reel Length
G02	1/4"	21/32"	N/A	600'
G03	3/8"	3/4"	G03NP	600'
G04	1/2"	15/16"	G04NP	600'
G06	3/4"	1-1/4"	G06NP	500'
G08	1"	1-1/2"	G08NP	300'
G10	1-1/4"	1-13/16"	G10NP	300'
G12	1-1/2"	2-1/8"	G12NP	100'
G16	2"	2-3/4"	G16NP	100'

1" BOBTAIL HOSE ASSEMBLIES

Assemblies for bulk truck liquid service, complete with permanent connections.

Item #		
Goodall	Length	Connections
GC08-100'	100'	1" MNPT
GC08-125'	125'	1" MNPT
GC08-150'	150'	1" MNPT
FV08-125'	125'	1" MNPT
FV08-150'	150'	1" MNPT

HB-1000 Hose Buddy

Fits 2" hose to protect from abrasive ground surfaces. Easily transferable from hose to hose.

HOSE/FLEXIBLE CONNECTORS (CONTINUED)

SCUFF GUARD

Heavy duty vinyl wrap protects your hose from abrasion. Increases hose life significantly. Sold per foot.

Item #	Fits Hose Size
SCUFF-06	3/4"
SCUFF-08	1"
SCUFF-10	1 1/4"
SCUFF-16	2"

LP-Gas Engine Fuel Hose

Item #	Hose I.D.	Hose O.D.	Min. Burst	Working Pressure
A4QW-A	3/16"	.52"	2000 psi	350 psi
A6QW-D*	5/16"	.67"	2000 psi	350 psi
A8QW-A	13/32"	.77"	2000 psi	350 psi
A10QW-A	1/2"	.92"	2000 psi	350 psi
A12QW-A	5/8"	1.08"	2000 psi	350 psi

* Add suffix R for rubber coated hose

GVH100

1" Carburetion Vapor Hose

GVH58

5/8" Carburetion Vapor Hose

HIGH PRESSURE LIQUID HOSE ASSEMBLIES

350 psig Working Pressure

Pre-made 1/2" through 2" hose assemblies in various lengths.

Item #	Description
GC04-XX"	1/2" hose
GC06-XX"	3/4" hose
GC08-XX"	1" hose
GC10-XX"	1 1/4" hose
GC12-XX"	1 1/2" hose
GC16-XX"	2" hose

*Hoses less than 2' are measured in inches

STAINLESS STEEL FLEXIBLE CONNECTORS

Any length can be special ordered. Also available with union end.

SIZE	MALE BY MALE	MALE BY FEMALE
3/4" x 12"	LF06X120	———
3/4" x 18"	LF06X180	———
1" x 10"	LF08X100	———
1" x 14"	LF08X140	———
1" x 16"	LF08X160	———
1" x 18"	LF08X180	———
1 1/4" x 16"	LF10X160	LFU10X160
1 1/4" x 18"	LF10X180	———
1 1/2" x 18"	LF12X180	———
2" x 18"	LF16X180	LFU16X180
3" x 18"	LF24X180	———
3" x 24"	LF24X240	LFU24X240

ENERCO VAPOR HOSE ASSEMBLIES

Item #	Hose I.D.	Description
71149-120	1/4"	1/4" x 10' Hose Assembly
71149-140	1/4"	1/4" x 12' Hose Assembly
71149-180	1/4"	1/4" x 15' Hose Assembly
71149-24	1/4"	1/4" x 2' Hose Assembly
71149-36	1/4"	1/4" x 3' Hose Assembly
71149-48	1/4"	1/4" x 4' Hose Assembly
71149-60	1/4"	1/4" x 5' Hose Assembly
71149-72	1/4"	1/4" x 6' Hose Assembly
71149-96	1/4"	1/4" x 8' Hose Assembly

Item #	Hose I.D.	Description
71158-12	1/4"	QCC x 1/4" Inverted Flare, 12"
71158-15	1/4"	QCC x 1/4" Inverted Flare, 15"
71158-18	1/4"	QCC x 1/4" Inverted Flare, 18"
71158-20	1/4"	QCC x 1/4" Inverted Flare, 20"
71158-24	1/4"	QCC x 1/4" Inverted Flare, 24"
71158-36	1/4"	QCC x 1/4" Inverted Flare, 36"
71158-48	1/4"	QCC x 1/4" Inverted Flare, 48"

Item #	Hose I.D.	Description
71169-120	3/8"	3/8" Fl. Swivel, 10'
71169-144	3/8"	3/8" Fl. Swivel, 12'
71169-180	3/8"	3/8" Fl. Swivel, 15'
71169-24	3/8"	3/8" Fl. Swivel, 2'
71169-240	3/8"	3/8" Fl. Swivel, 20'
71169-300	3/8"	3/8" Fl. Swivel, 25'
71169-36	3/8"	3/8" Fl. Swivel, 3'
71169-48	3/8"	3/8" Fl. Swivel, 4'
71169-60	3/8"	3/8" Fl. Swivel, 5'
71169-72	3/8"	3/8" Fl. Swivel, 6'
71169-96	3/8"	3/8" Fl. Swivel, 8'

Specifications

BODY

Gas Grade Polyethylene (PE4710)
Collet: Acetal (POM)
Thrust Washer: Polyethylene (PE) Seals: BUNA-N (Nitrile)
Spacer Retainer Ring: Acetal (POM)
Stiffener: Zinc-Plated Carbon Steel

TESTING

Pull-Out Resistance:
ASTM D2513 Category 1
- 0.2 ipm
- 20 ipm
- Full Seal + Full Restraint, PE Yields

Hydrostatic: ASTM D1598
- 670 psi (4.6 MPa) Hoop Stress
- 176°F (80°C)
- Pass

Quick Burst: ASTM D1599
- Pass

PRESSURE RATINGS

Couplings are designed to meet or exceed the maximum allowable operating pressure (MAOP) requirements of the piping system: 125 psig MAOP, or the rating of the installed tubing.

SIZES

½ in. CTS through 2 in. IPS

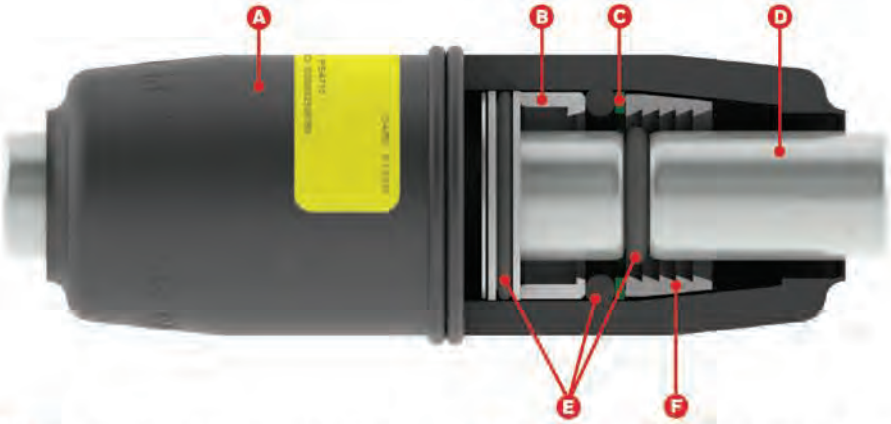

A Permasert 2.0 Coupling: Molded from PE4710 resin. Meets or exceeds US DOT Part 192; ASTM D2513, Category 1; ASTM F1924; NFPA 58; CSA 137.4. IAPMO/UPC listed.

B Spacer Retainer Ring: Centers pipe and provides a redundant activation mechanism for the collet.

Thrust Washer: Provides even distribution of force on the collet.

C Stiffener: Zinc-plated steel stiffener guarantees proper alignment and adds support for full restraint.

D Seals: BUNA-N (Nitrile) elastomers provide a redundant sealing system.

E Collet: Tapered gripping collet prevents pipe pull-out.

Installation Procedure

1. **Cut the tubing so that the end is square.**

2. **Wipe the tubing with a dry, clean cloth.**

3. **Inspect the tubing for surface defects.** Note: This quick-install image guide is for reference only. Permasert 2.0 couplings require training on the complete installation procedure before installing any Permasert 2.0 product.

4. **Insert tube and rotate in chamfer tool until tube bottoms out.**

5. **Mark the stab depth.**

6. **Stab tubing into the coupling until it bottoms out.**

7. **Pressure test the finished joint according to your standard operating procedure.**

The Complete Main to Meter System

The Permasert 2.0 family of easy-to-install products enables you to make fast, safe piping connections without requiring special tools or expensive equipment. Permasert 2.0 products can be configured for virtually all gas-distribution applications.

- **A Anodeless Service Line Risers and Transition Fittings** - see page 12
- **B PSV Polyethylene Shut Off Valves** - see page 15
- **C EFV Excess Flow Valves** - see page 8
- **D Permasert 2.0 Couplings** - see page 4-5
- **E Servi-Sert™ Fittings** - see page 15
- **F Permalock™ Mechanical Tapping Tees** - see page 6

Also available:

Prefabricated Meter Sets and Steel Products - see page 15

Custom Fittings and Accessories - see page 14

NOTE: ALL Permasert 2.0 stab fittings must be for the proper SDR/Wall thickness as identified on the poly-pipe.

Permasert Mechanical Couplings

Permasert 1.0 (OD) Part #	Permasert 2.0 (ID/OD) Part #	Size 1	SDR/Wall	Ctn Qty
P50100	PC50100	1/2" CTS	.090"	50
P50701	PC50701	1/2" IPS	SDR 9.3	25
P50030	PC50030	3/4" IPS	SDR 11	25
P50103	PC50103	1" CTS	.099/.102"	25
P50601	PC50601	1" IPS	SDR 11	25
P50035	PC50035010	1-1/4" IPS	SDR 10	20
P50031	PC50031	1-1/4" IPS	SDR 11	20
P50314	PC50314	2" IPS	SDR 11	10

Permasert Repair Couplings

Permasert 1.0 (OD) Part #	Permasert 2.0 (ID/OD) Part #	Size	SDR/Wall	Overall Length	Ctn Qty
P50056	PC50056	1/2" CTS	.090"	12"	10
P50175	PC50175	3/4" IPS	SDR 11	12"	10
P50172	PC50172	1" CTS	.099/.102"	12"	10
P50640	PC50640	1" IPS	SDR 11	13"	10
P50342	PC50342	1-1/4" IPS	SDR 11	13"	10
P50341	PC50341	2" IPS	SDR 11	15-1/2"	10

Permasert Ells

Permasert 1.0 (OD) Part #	Permasert 2.0 (ID/OD) Part #	Size	SDR/Wall	Ctn Qty
P50294	PC50294	1/2" CTS	.090"	50
P50732	PC50732100	1/2" IPS	SDR 9.3	25
P51620	PC51620	3/4" IPS	SDR 11	25
P51333	PC51333	1" CTS	.099/.102"	25
P50636	PC50636	1" IPS	SDR 11	20
P50988	PC50988	1-1/4" IPS	SDR 11	10
P50315	PC50315	2" IPS	SDR 11	4

Permasert Wyes

Permasert 1.0 (OD) Part #	Permasert 2.0 (ID/OD) Part #	Size	SDR/Wall	Ctn Qty
P51702	PC51702	1/2" CTS	.090"	25
P51704	PC51704	1" CTS	.099/.102"	20
P51707	PC51707	3/4" IPS	SDR 11	20

Permasert Blind End Stubs
(Dead-End Fitting, One End Functional)

Permasert 1.0 (OD) Part #	Permasert 2.0 (ID/OD) Part #	Size	SDR/Wall	Ctn Qty
P50015	PC50015	1/2" CTS	.090"	50
P50717	PC50717	1/2" IPS	SDR 9.3	25
P50809	PC50809	3/4" IPS	SDR 11	25
P50048	PC50048	1" CTS	.099/.102"	25
P50048	PC50049	1" CTS	.090"	25
P50612	PC50612	1" IPS	SDR 11	25
P50024	PC50024100	1-1/4" IPS	SDR 10	10
P50028	PC50028	1-1/4" IPS	SDR 11	10
P51770	PC51770	2" IPS	SDR 11	5

Permasert Blind End Cap
(Stop and Go - Both Ends Functional)

Permasert 1.0 (OD) Part #	Permasert 2.0 (ID/OD) Part #	Size	SDR/Wall	Ctn Qty
P50011	N/A	1/2" CTS	.062"	50
P50016	PC50016	1/2" CTS	.090"	50
P50716	PC50716	1/2" IPS	SDR 9.3	25
P50520	PC50520	3/4" CTS	.090"	25
P50026	PC50026	3/4" IPS	SDR 11	25
5P0045	PC50045	1" CTS	.099/.102"	25
P50045	PC50044	1" CTS	.090"	25
P50046	PC50046	1" CTS	.121"	25
P51501	PC51501	1" IPS	SDR 11	25
P50033	PC50033	1-1/4" IPS	SDR 9.3/10	10
P50027	PC50027	1-1/4" IPS	SDR 11	10
P50317	PC50317	2" IPS	SDR 11	5

Coppersert Copper-to-PE Transition Couplings

These reliable couplings combine a brass 45° flare fitting for copper tubing with a Permasert coupling for polyethylene (PE) piping. These transition couplings are fast and easy to install and place minimal stress on PE piping.

- Copper sizes range from 1/4" to 5/8" O.D. and PE sizes range from 1/2" CTS to 1" IPS
- Configurations available include couplings, tees, ells, and reducing couplings
- Molded from industry proven polyethylene. Pull-out strength is greater than the connecting PE piping itself
- Fittings should be protected against corrosion as warranted by soil conditions
  in accordance with NFPA-58 and CFR 49 Part 192 as required

Permasert 1.0 (OD) Part #	Permasert 2.0 (ID/OD) Part #	Copper Size	PE Size	SDR/Wall	Ctn Qty
P41120	PS41120	1/4" O.D.	1/2" CTS	.090"	10
P41007	PS41007	3/8" O.D.	1/2" CTS	.090"	10
P41013	PS41013	1/2" O.D.	1/2" CTS	.090"	10
P41002	PS41002	5/8" O.D.	1/2" CTS	.090"	10
P41134	PS41134	1/4" O.D.	3/4" IPS	SDR 11	10

Permasert 3-Way Tees

Permasert 1.0 (OD) Part #	Permasert 2.0 (ID/OD) Part #	Size	Dim	SDR/Wall	Ctn Qty
P50199	PC50199	1/2"	CTS	.090"	25
P50550	PC50550	3/4"	CTS	.090"	20
P50929	PC50929	3/4"	IPS	SDR 11	20
P50292	PC50292	1"	CTS	.099/.102"	20
P50634	PC50634	1"	IPS	SDR 11	10
P50989	PC50989	1-1/4"	IPS	SDR 11	10
P50316	PC50316	2"	IPS	SDR 11	4

Transition Fittings

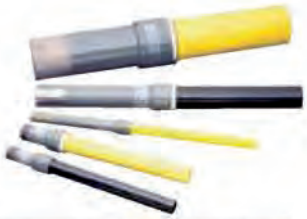

Part #	Outlet	Steel Size	PE Size	SDR/Wall
P700004	THD	1/2"	1/2" CTS	.090"
P700205	THD	3/4"	1/2" CTS	.090"
P700802	THD	3/4"	3/4" IPS	SDR 11
P703201	THD	3/4"	1" CTS	.099"
P701407	THD	1"	1" CTS	.099"
P701202	THD	1"	1" IPS	SDR 11
P702204	THD	1 1/4"	1 1/4" IPS	SDR 10
P702205	THD	1 1/4"	1 1/4" IPS	SDR 11
P702602	THD	2"	2" IPS	SDR 11

Meets or exceed the requirements of ASTM D-2513 category 1, ANSI B 1.20, ANSI B 31.8, US DOT Part 192, NFPA-58 and CSA B137.4

Permasert 3-Way Reducing Tees

Permasert 1.0 (OD) Part #	Permasert 2.0 (ID/OD) Part #	Size	SDR/Wall	Size	SDR/Wall	Size	SDR/Wall	Ctn Qty
P51335	PC51335	1/2" CTS	.090"	1/2" CTS	.090"	1" CTS	.099/.102"	20
P50461	PC50461	3/4" IPS	SDR 11	3/4" IPS	SDR 11	1/2" CTS	.090"	20
P50451	PC50451	1" CTS	.099/.102"	1" CTS	.099/.102"	1/2" CTS	.090"	20
P50632	PC50632	1" IPS	SDR 11	1" IPS	SDR 11	1/2" CTS	.090"	10
P50635	PC50635	1" IPS	SDR 11	1" IPS	SDR 11	3/4" IPS	SDR 11	10
P50336100	PC50336100	1-1/4" IPS	SDR 11	1-1/4" IPS	SDR 11	1" CTS	.099/.102"	10
P51283	PC51283	2" IPS	SDR 11	2" IPS	SDR 11	1" IPS	SDR 11	10
P51285	PC51285	2" IPS	SDR 11	2" IPS	SDR 11	1-1/4" IPS	SDR 11	4
P50348100	PC50348100	2" IPS	SDR 11	2" IPS	SDR 11	1" CTS	.099/.102"	4

Permasert Reducing Ells

Permasert 1.0 (OD) Part #	Permasert 2.0 (ID/OD) Part #	Size	SDR/Wall	Size 2	SDR/Wall	Ctn Qty
P50223	PC50223	1" CTS	.099/.102"	1/2" CTS	.090"	25

Permasert Reducing Couplings

Permasert 1.0 (OD) Part #	Permasert 2.0 (ID/OD) Part #	Size 1	SDR/Wall	Size 2	SDR/Wall	Ctn Qty
P50524	PC50524	1/2" CTS	.062"	3/4" CTS	.077"	25
P50183	PC50183	1/2" CTS	.062"	1" CTS	.099/.102"	25
P50756	PC50756	1/2" IPS	SDR 9.3	3/4" IPS	SDR 11	25
P50969	PC50969	3/4" IPS	SDR 11	1/2" CTS	.090"	25
P50148	PC50148	3/4" IPS	SDR 11	1" CTS	.099/.102"	25
P50149	PC50149	1" CTS	.099/.102"	1/2" CTS	.090"	25
P50641	PC50641	1" IPS	SDR 11	1/2" CTS	.090"	25
P50623	PC50623	1" IPS	SDR 11	1" CTS	.099/.102"	25
P51432	PC51432	1" IPS	SDR 11	3/4" IPS	SDR 11	25
P50627	PC50627	1" IPS	SDR 11	2" IPS	SDR 11	5
P50194	PC50194	1-1/4" IPS	SDR 11	1" CTS	.099/.102"	10
P51677	PC51677	1-1/4" IPS	SDR 11	3/4" IPS	SDR 11	10
P50643	PC50643	1-1/4" IPS	SDR 11	1" IPS	SDR 11	10
P50136	PC50136	1-1/4" IPS	SDR 11	1/2" CTS	.090"	10
P50312	PC50312	2" IPS	SDR 11	1" CTS	.099/.102"	10
P50334	PC50334100	2" IPS	SDR 11	1-1/4" IPS	SDR 11	5

PermaLock Mechanical Tapping Tees

Permasert 1.0 (OD) Part #	Permasert 2.0 (ID/OD) Part #	Main Size	Outlet Size	SDR/Wall	Ctn Qty
P54201	PL54201	1-1/4" IPS	1/2" CTS	.090"	20
P54251	PL54251	1-1/4" IPS	1" CTS	.099/.102"	20
P54253	PL54253	1-1/4" IPS W/Sleeve	1" CTS	.099/.102"	20
P54290	PL54290	1-1/4" IPS	3/4" IPS	SDR 11	20
P54272	PL54272	1-1/4" IPS	1" IPS	SDR 11	20
P55702	PL55702	2" IPS	1/2" CTS	.090"	20
P55901	PL55901	2" IPS	3/4" IPS	SDR 11	20
P55802	PL55802	2" IPS	1" CTS	.099/.102"	20
P55758	PL55758	2" IPS W/Sleeve	1" CTS	.099/.102"	20
P55951	PL55951	2" IPS	1" IPS	SDR 11	10
P55979	PL55979	2" IPS	1-1/4" IPS	SDR 11	10
P55990	PL55990	2" IPS	2" IPS	SDR 11	10

Anodeless Risers

Elster Perfection's fully approved Servi-Sert All-Flex riser kits are available in 84" lengths for the first-stage regulator (tank side) and 36" lengths for the second-stage regular (house side). Sold in kit form, as required by NFPA-58/1998 Edition, these risers feature pull-out proof, third-party design-certified Servi-Sert service heads and PVC sunlight resistant, coated steel flex that meets crush strength requirements. These risers are lined with a plastic centering device that provides an annular insulating air space. A moisture seal permanently affixed to the end of the riser provides moisture, corrosion and shear.

Elster Perfection anodeless risers and steel-to-polyethylene transition fittings are ideal for gas and oil applications. They provide a connection with a pull-out strength greater than the PE tubing to which it's connected.

- Outlet sizes from 1/2" IPS to 12" IPS
- Inlet sizes from 1/2" CTS to 12" IPS
- Available with Permasert couplings or fusion connection on polyethylene inlet
- Risers available with an additional below grade gas tight seal
- Galvanized or epoxy coated casings available
- Flexible casings available
- Custom configurations available
- PELT™ risers (Perfection Extended Life Technology) resist effects of chemical, atmospheric, ultraviolet and physical attack, and deliver excellent above ground corrosion resistance
- Flanged, threaded, and weld style transition fittings and risers available

Permasert 1.0 (OD) Part #	Permasert 2.0 (ID/OD) Part #	Outlet Size	Inlet Size	Inlet Type	SDR/Wall	Vertical	Horizontal
P77205	PM77205	1/2" IPS	1/2" CTS	Cplg	.090"	18"	18"
P77195	PM77195	3/4" IPS	1/2" CTS	Cplg	.090"	18"	18"
P75678	N/A	3/4" IPS	1/2" CTS	B/F	.090"	18"	18"
P77201	PM77201	3/4" IPS	1/2" CTS	Cplg	.090"	22"	18"
P77202	N/A	3/4" IPS	1/2" CTS	B/F	.090"	22"	18"
P75169	N/A	3/4" IPS	1/2" CTS	B/F	.090"	30"	24"
P75174	N/A	3/4" IPS	1/2" CTS	B/F	.090"	30"	24"
P77181	PM77181	3/4" IPS	1/2" CTS	Cplg	.090"	30"	24"
P77183	N/A	3/4" IPS	1/2" CTS	B/F	.090"	36"	26"
P77185	PM77185	3/4" IPS	1/2" CTS	Cplg	.090"	36"	26"
P79208	N/A	3/4" IPS	3/4" IPS	B/F	SDR 11	30"	25"
P79209	PG79209	3/4" IPS	3/4" IPS	Cplg	SDR 11	30"	25"
P75387	N/A	3/4" IPS	3/4" IPS	B/F	SDR 11	36"	24"
P79213	PG79213	3/4" IPS	3/4" IPS	Cplg	SDR 11	36"	24"
P77120	PG77120	3/4" IPS	1" CTS	Cplg	.099/.102"	30"	25"
P79035	N/A	1" IPS	1" IPS	B/F	SDR 11	30"	24"
P78442	PG78442	1" IPS	1" IPS	Cplg	SDR 11	30"	26"
P79425	N/A	1" IPS	1" IPS	B/F	SDR 11	36"	24"
P79411	PG79411	1" IPS	1" IPS	Cplg	SDR 11	36"	24"
P75903	N/A	1-1/4" IPS	1 1/4" IPS	B/F	SDR 11	30"	24"
P75901	PG75901	1-1/4" IPS	1 1/4" IPS	Cplg	SDR 10	30"	25"
P75904	PG75904	1-1/4" IPS	1 1/4" IPS	Cplg	SDR 11	30"	25"
P79811	N/A	2" IPS, Fusion Elbow	2" IPS	B/F	SDR 11	34"	12"
P75906	PG75906	2" IPS, Fusion Elbow	2" IPS	Cplg	SDR 11	34"	16"
P78403	N/A	2" IPS, Prebent	2" IPS	B/F	SDR 11	38"	36"

Anodeless Servi-Sert Field Assembled Risers

Category	Permasert 1.0 (OD) Part #	Permasert 2.0 (ID/OD) Part #	Outlet	Inlet	SDR/Wall	Vertical	Horizontal
Anodeless Servi-Sert Field Assembled Risers - Rigid	P71350	PT71350	1/2" IPS	1/2" CTS	.090"	30"	24"
Anodeless Servi-Sert Field Assembled Risers - Rigid	P71453	PT71453	3/4" IPS	1/2" CTS	.090"	30"	24"
Anodeless Servi-Sert Field Assembled Risers - Rigid	P71304	PT71304	3/4" IPS	3/4" IPS	SDR 11	30"	24"
Anodeless Servi-Sert Field Assembled Risers - Rigid	P71720	PT71720	1" IPS	1" CTS	.099"	30"	24"
Anodeless Servi-Sert Field Assembled Risers - Stub-flex	P71351	PT71351	1/2" IPS	1/2" CTS	.090"	15"	36"
Anodeless Servi-Sert Field Assembled Risers - Stub-flex	P71463	PT71463	3/4" IPS	1/2" CTS	.090"	15"	36"
Anodeless Servi-Sert Field Assembled Risers - Stub-flex	P71721	PT71721	3/4" IPS	3/4" IPS	SDR 11	17 1/2"	36"
Anodeless Servi-Sert Field Assembled Risers - Stub-flex	P71600	PT71600	1" IPS	1" CTS	.099"	17 1/2"	36"
Anodeless Servi-Sert Field Assembled Risers - Stub-flex	P71731	PT71731	1" IPS	1" IPS	SDR 11	18"	36"

Anodeless Servi-Sert Field Assembled All Flex Risers

Permasert 1.0 (OD) Part #	Permasert 2.0 (ID/OD) Part #	Outlet	Inlet	SDR/Wall	Overall Length
P71353	PT71353	1/2" IPS	1/2" CTS	.090"	84"
P71354	PT71354	1/2" IPS	1/2" CTS	.090"	36"
P71355	PT71355	3/4" IPS	1/2" CTS	.090"	84"
P71461	PT71461	3/4" IPS	1/2" CTS	.090"	60"
P71356	PT71356	3/4" IPS	1/2" CTS	.090"	36"
P71412	PT71412	3/4" IPS	3/4" IPS	SDR 11	84"
P71411	PT71411	3/4" IPS	3/4" IPS	SDR 11	60"
P71410	PT71410	3/4" IPS	3/4" IPS	SDR 11	36"
P71511	PT71511	3/4" IPS	1" CTS	.099/.102"	36"
P71511	PT71511090	3/4" IPS	1" CTS	.090"	36"
P71510	PT71510	3/4" IPS	1" CTS	.099/.102"	84"
P71510	PT71510090	3/4" IPS	1" CTS	.090"	84"

EFV excess flow valves

The Elster Perfection EFV, prevents catastrophic gas leakage by automatically shutting off gas flow when flow exceeds a predetermined rate. Elster Perfection excess flow valves are incorporated into our gas distribution products for easy installation in your distribution system.

- Available in Permasert couplings, fusion and mechanical tapping tees.
- Available in fusion outlet sticks, steel pipe nipples, and incorporated into our PSV valves
- Self-actuating valve with automatic reset
- Comply with the requirements of MSS SP-115 and US DOT CFR Title 49, Part 192.381

Prefabricated meter sets & steel products

Elster Perfection meter loops, bends, swivels and meter manifold/headers can simplify your meter set installations. Our precision fabricated products are ideal for both single dwelling and multiple family/commercial applications. The Elster Perfection prefabricated meter sets simplify installation, reduce the number of threaded joints (potential leak points) and improve the appearance of your finished installation.

- Custom configurations and assemblies available
- All welds meet the requirements of US DOT CFR 49, Part 192 and ASME Section IX

Excess Flow Valves

Permasert 1.0 (OD) Part #	Permasert 2.0 (ID/OD) Part #	Size	SDR/Wall	EFV	Ctn Qty
P51474	PC51474	1/2" CTS	.090"	EP 400	50
P50034	PC50034056	1/2" CTS	.090"	EP 600	50
P51497	PC51497	1/2" CTS	.090"	EP 800	50
P51497	PC51497010	1/2" CTS	.090"	EP 1100	50
P51848	PC51848	1/2" IPS	SDR 9.3	EP 800	25
P51848	PC51848010	1/2" IPS	SDR 9.3	EP 1100	25
P51848	PC51848011	1/2" IPS	SDR 9.3	EP 1800	25
P51476	PC51476	1" CTS	.099/.102"	EP 400	25
P51448	PC51448011	1" CTS	.099/.102"	EP 600	25
P51448	PC51448	1" CTS	.099/.102"	EP 800	25
P51448	PC51448010	1" CTS	.099/.102"	EP 1100	25
P51671	PC51671	1" CTS	.099/.102"	EP 1800	25
P50581	PC50581	1/2" IPS	SDR 9.3	EP 400	25
P50584	PC50584	3/4" IPS	SDR 11	EP 400	25
P51525	PC51525101	3/4" IPS	SDR 11	EP 600	25
P51525	PC51525	3/4" IPS	SDR 11	EP 800	25
P51525	PC51525100	3/4" IPS	SDR 11	EP 1100	25
P51382	PC51382	3/4" IPS	SDR 11	EP 1800	25
P51636	PC51636	1" IPS	SDR 11	EP 400	25
P51636	PC51636010	1" IPS	SDR 11	EP 600	25
P51795	PC51795	1" IPS	SDR 11	EP 800	25
P51806	PC51806012	1" IPS	SDR 11	EP 1100	25
PP51383	PC51383	1" IPS	SDR 11	EP 1800	25
P51479	PC51479	1-1/4" IPS	SDR 11	EP 400	20
P50345	PC50345	1-1/4" IPS	SDR 11	EP 800	20
P50345	PC50345010	1-1/4" IPS	SDR 11	EP 1100	20
P50350	PC50350	1-1/4" IPS	SDR 11	EP 1800	20

PE Shut-Off Valves with Permasert (PSVP)

The Elster Perfection PSV polyethylene shut-off valve replaces non-PE and metallic valves to provide economical compatibility with all PE gas distribution systems. These PSV* valves eliminate the need for corrosion inhibiting coatings, cathodic protection, federally mandated corrosion inspection and record-keeping.

- Sizes from 1/2" to 8"
- 1/2" to 1-1/4" sizes are available with quarter turn (90°) or full turn (360°) actuators
- Temperatures from -20°F to 100°F
- Available with Permasert outlets from 1/2" CTS through 2" IPS
- Fusion outlets available from 1/2" CTS through 8" IPS

Permasert 1.0 (OD) Part #	Permasert 2.0 (ID/OD) Part #	Outlet Size	SDR/Wall	Port Size	Ctn Qty
P45054	PV45054	1/2" CTS	.090"	0.89"	10
P45150	PV45150100	1/2" IPS	SDR 9.3	0.89"	10
P45100	PV45100	3/4" IPS	SDR 11	0.89"	10
P45071	PV45071	1" CTS	.099/.102"	0.89"	10
P45200	PV45200	1" IPS	SDR 11	0.89"	10
P45161	PV45161	1-1/4" IPS	SDR 11	0.89"	10
P46011	PV46011	2" IPS	SDR 11	1.74"	5

* Modified ball valve.
Meets or exceeds requirements of ASTM D-2513, US DOT Part 192, ANSI B16.40 and CSA B137.4
Note: PSV also available with butt and socket-fusion outlet ends.

Permasert XLP PE-to-PE with two stiffeners

Part #	Size	SDR/Wall	Ctn Qty
P55161	2" IPS	SDR 11	2

Permasert XLS PE-to-Steel with one stiffener

Part #	Size	SDR/Wall	Ctn Qty
P55164	2" IPS	SDR 11	2

Permasert XLPVC PE-to-PVC with two stiffeners

Part #	Size	SDR/Wall	PVC	Ctn Qty
P55167	2" IPS	SDR 11	SCH 40 PVC	2
P55168	2" IPS	SDR 11	SDR 21 PVC	2

Permasert XLC PE-to-Cast Iron with one stiffener

Part #	Size	SDR/Wall	Ctn Qty
P55171	2" IPS	SDR 11	2

Tools & Accessories

Elster Perfection offers a complete line of tools and accessories to assist field crews during the installation of our gas distribution products. Among these items are chamfering tools and kits, PE cutters/snippers, tools for mechanical tees, protective sleeves, tubing end protectors, marking pencils, polyethylene clamping devices, moisture seals and gaskets.

Permasert 2.0 Tools (ID/OD Chamfer)

Part #	Size/Description	Cty Qty
P58500	1/2" CTS	10
P58501	1/2" IPS	10
P58502	3/4" CTS	10
P58503	3/4" IPS	10
P58504	1" CTS	10
P58505	1" IPS	10
P58506	1 1/4" CTS	10
P58507	1 1/4" IPS	10
P58508	1 1/2" IPS	10
P58509	2" IPS	10

Snippers for Plastic Pipe

Part #	Description	Size	Ctn Qty
P55225	Snipper	For 1/8" to 1-1/4" CTS PE	1
P55225B	Blade	For 55225 Snipper	1
P55226	Snipper	For 1/8" to 1-1/4" IPS PE	1
P55226B	Blade	For 55226 Snipper	1
P55227	Super	For 1/8" to 2" IPS PE	1
P55227B	Blade	For 55227 Snipper	1

Marking/Rounding Support Clamps

Part #	Description	Size	Ctn Qty
55738	Clamp	1-1/4" IPS	25
55732	Clamp	2" IPS	25
55740	Clamp	3" IPS	25
55735	Clamp	4" IPS	25

PermaLock Tapping Tee Accessories

Part #	Description	Ctn Qty
55651	TEST CAP ASSEMBLY (1-1/4"IPS through 8"IPS Mains)	1
55685	PMTT INSTALLATION TOOL (5/16 Hex-Tee Handle)	1

PERFECTION FITTINGS & POLY PIPE

Meter Supports and Brackets

Elster Perfection's brackets are epoxy coated (gray) with cadmium-plated washers, bolts and nuts. All parts are packaged for easy storage and handling.

Part #	Description	Size	Nominal Building Offset	Ctn Qty
P74494	Remote Meter Support	1/2" & 3/4" IPS Risers		1
P74493	Remote Meter Support	1" IPS Risers		1
P74489	Remote Meter Support	1-1/4" & 2" Risers		1
P74440	Universal Mount Riser Bracket	Kit 3/4" through 2" IPS		1
P74506	Foundation Bracket	3/4" through 2" IPS	4"	1
P74500	Foundation Bracket	3/4" through 2" IPS	6"	1
P74491	Foundation Bracket	3/4" through 2" IPS	9"	1
P74508	Foundation Bracket	2" & 3" IPS Risers	9"	1
P09800	Wall Mounting Hardware (Including anchors, washer, bolts			1
P31733	5' Accessory Post			1

POLY PIPE & FITTINGS

PLASTIC PIPING

POLY PIPE
PE2406 GAS PIPE

- For vapor service not exceeding 30 psig
- For underground installation with a minimum of 18" cover, or 12" cover if external damage to the pipe is not likely
- Available in copper tube size (CTS) or iron pipe size (IPS)

Item#	Pipe Size	Coil Length
PP-1/2CTS*	1/2" CTS	500'
PP-1"CTS	1" CTS	500'
PP-3/4IPS	3/4" IPS	500'
PP-1"IPS	1" IPS	500'
PP-11/4-150	1 1/4" IPS	150'
PP-11/4-500	1 1/4" IPS	150'
PP-2"IPS-150	2" IPS	150'
PP-2"IPS-500	2" IPS	500'

** Can be shipped via UPS*

MARKING FLAG
P450W

Marking Flag with 30" Wire

TRACER WIRE
1430Y-HS-500

500' # 14 Yellow Tracer Wire

Install in trench with plastic pipe to allow location of pipe by metal detector.

DETECTATAPE METALLIC TAPE

Install in trench after partially burying pipe. Allows location of pipe with metal detector and protects pipe when digging because the tape will be exposed before the pipe to prevent damage.

Item #	Length	Width
DT2YG	1000'	2"

POLYMINDER-C

Cart for holding poly-pipe reel together after its first use.

POLYMINDER-H

Hitch mount style poly-pipe holder

NON-DETECTABLE TAPE
ND3YG

3" x 1000' yellow tape

SOCKET FUSION FITTINGS

COUPLINGS

Item #	Size
SC-04	1/2" CTS
SC-06	3/4" IPS
SC-08	1" IPS
SC-10	1 1/4" IPS
SC-16	2" IPS

ELBOWS

Item #	Size
SE-04	1/2" CTS
SE-06	3/4" IPS
SE-08	1" IPS
SE-10	1 1/4" IPS
SE-16	2" IPS

TEES

Item #	Size
ST-04	1/2" CTS
ST-06	3/4" IPS
ST-08	1" IPS
ST-10	1 1/4" IPS
ST-16	2" IPS

END CAPS

Item #	Size
SCAP-04	1/2" CTS
SCAP-06	3/4" IPS
SCAP-08	1" IPS
SCAP-10	1 1/4" IPS
SCAP-16	2" IPS

REDUCER COUPLINGS

Item #	Size
SRC-06/04	3/4" IPS X 1/2" CTS
SRC-08/04	1" IPS X 1/2" CTS
SRC-08/06	1" IPS X 3/4" IPS
SRC-10/06	1 1/4" IPS X 3/4" IPS
SRC-10/08	1 1/4" IPS X 1" IPS
SRC-16/08	2" IPS X 1" IPS
SRC-16/10	2" IPS X 1 1/4" IPS

TAPPING TEES

Item #	Size
STT-10/04	1 1/4" IPS X 1/2" CTS
STT-10/06	1 1/4" IPS X 3/4" IPS

FUSION ACCESSORIES/TOOLS

COLD RINGS

Item #	Size (Imperial)
550CR0620000	1/2"CTS
550CR0500000	1/2" IPS
550CR0750000	3/4" IPS
550CR0110000	1" CTS
550CR0010000	1" IPS
550CR0120000	1 1/4" IPS
550CR0150000	1 1/2" IPS
550CR0020000	2" IPS
550CR0030000	3" IPS
550CR0040000	4" IPS

HEATER MUFF
556HM3000102

DEPTH GAUGES

Item #	Size (Imperial)
5550005	1/2" CTS
555DG1500000	1/2" IPS
555DG1750000	3/4" IPS
5550004	1" CTS
555DG1010000	1" IPS
555DG1120000	1 1/4" IPS
555DG1150000	1 1/2" IPS
555DG1020000	2" IPS
555DG2030400	3" & 4" Combination

FITTING HOLDERS

Item #	Size (Imperial)
550FH0020000	2" IPS
550FH0030000	3" IPS
550FH0040000	4" IPS

BRANCH SADDLE FACES

Item #	Size (Imperial)
556EB2000098	2" X 2" IPS
556EB2000099	3" X 2" IPS
556EB2000100	4" X 2" IPS
556EB2000101	6" X 2" IPS
556EB2000102	8" X 2" IPS

FUSION ACCESSORIES/TOOLS (CONTINUED)

TAPPING TEE FACES

Item #	Size (Imperial)
556EB2000091	1 1/4" IPS
556EB2000092	1 1/2" IPS
556EB2000093	2" IPS
556EB2000094	3" IPS
556EB2000095	4" IPS
556EB2000096	6" IPS
556EB2000097	8" IPS

FUSION TOOLS

Item #	Description
5560021	Model 2 Electric Heating Tool
5560022	Model 4 SW Electric Heating Tool
5560023	Model 4 Gas Fired Heating Tool
5560024	2" Gas Fired Hot Head Tool
5560025*	Extension Handle
556HM3000102	Heater Muff
900MM0120025	Nozzle Regulator

* For Model 2 and Model 4 SW Tools

BUTT FUSION FACES

Item #	Description
556EB2000051	Model 2 Butt Fusion Plates
556EB3400014	Model 4 Butt Fusion Plates
5560005	Model 2 Butt Support Set

CHAMFER TOOLS

Item #	Size (Imperial)
550CT0120000	1 1/4" IPS
550CT0150000	1 1/2" IPS
550CT0020000	2" IPS
550CT0030000	3" IPS
550CT0040000	4" IPS

FUSION ACCESSORIES/TOOLS (CONTINUED)

SOCKET FUSION FACES

Item #	Size (Imperial)
555SP2620000	1/2" CTS
555SP2500000	1/2" IPS
555SP2750000	3/4" IPS
555SP2110000	1" CTS
555SP2010000	1" IPS
555SP2120000	1 1/4" IPS
555SP2150000	1 1/2" IPS
555SP2020000	2" IPS
555SP2030000	3" IPS
555SP2040000	4" IPS

SQUEEZE-OFF TOOLS

Item #	Description
5570006	1/2" CTS - 2" - Service Squeeze-Off Tool
550ST0020620	2"- 6" Squeeze-Off Tool

Flexible Gas Piping CSST

The Lightning Problem is Solved!

After ten years, over 125 million feet have been installed in homes across America, making CounterStrike® CSST the ***only*** field-proven product in its class!

- CounterStrike® has been shown to be up to 400 times more resistant to the damaging effects of electrical arcing energy than yellow CSST.
- Uses the NEW AutoSnap® fittings that do not require disassembly/reassembly!
- The most complete range of CSST sizes (3/8"- 2") available.
- There are no additional bonding requirements for CounterStrike® imposed by the manufacturer's installation instructions.
- Lays straighter and pulls easier, dramatically decreasing installation times (and saving you time and money in the process).
- Unlike competitive brands, CounterStrike® is non-annealed making it more crush resistant, and easier to cut.

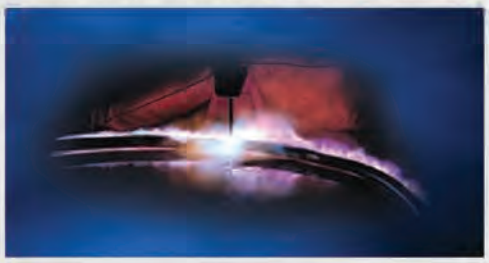

- Superior lightning protection compared to bonded yellow CSST!

Not Bonded? This product incorporates technology where under some installations, equipotential bonding is not required.

Rated at maximum of 5 psig working pressure.

CounterStrike® Flexible Gas Tubing

Corrugated Stainless Steel 300 Series with Black Conductive Jacket

Part Number	Description	Size	Reel Length
CS-375-250	*CounterStrike* 3/8"	3/8"	250 ft
CS-375-100	*CounterStrike* 3/8"	3/8"	100 ft
CS-500-500	*CounterStrike* 1/2"	1/2"	500 ft
CS-500-250	*CounterStrike* 1/2"	1/2"	250 ft
CS-500-100	*CounterStrike* 1/2"	1/2"	100 ft
CS-500-50	*CounterStrike* 1/2"	1/2"	50 ft
CS-750-250	*CounterStrike* 3/4"	3/4"	250 ft
CS-750-100	*CounterStrike* 3/4"	3/4"	100 ft
CS-750-50	*CounterStrike* 3/4"	3/4"	50 ft
CS-100-180	*CounterStrike* 1"	1"	180 ft
CS-100-100	*CounterStrike* 1"	1"	100 ft
CS-100-50	*CounterStrike* 1"	1"	50 ft
CS-125-250	*CounterStrike* 1¼"	1¼"	250 ft
CS-125-150	*CounterStrike* 1¼"	1¼"	150 ft
CS-150-250	*CounterStrike* 1½"	1½"	250 ft
CS-150-150	*CounterStrike* 1½"	1½"	150 ft
CS-200-150	*CounterStrike* 2"	2"	150 ft

Note: Other lengths available. Call Rutherford Equipment for price and lead time.

Misc TracPipe Accessories

Over Pressure Protection Device

ID Tag

Gas Label

Part Number	Description	Size	Pkg. Qty
FGP-OPD-274	Over Pressure Protection Device	1/2"	1 each
FGP-CAP-3	Rain Cap for REG-3	1/2"	1 each
FGP-TAG-20	High Pressure Tags	All	20/pkg
FGP-ITAG-50	Installation Tags	All	50/pkg
FGP-GAS LABEL	Gas Label	All	500/Roll

Carbon Steel Hardened Striker Plates

Part Number	Description	Size	Pkg Qty
SP-025	Quarter Striker Plate	3" x 2"	250/box
SP-050	Half Striker Plate	3" x 7"	100/box
SP-075	Three Quarter Striker Plate	3" x 9"	100/box
SP-100	Full Striker	3" x 12"	50/box
SP-617	6½" X 17 Striker Plate	6½" X 17"	1 each

TracPipe Tools

Tube Cutters

TC-15	Cutter No. 15	3/8"-1"	1 each
TC-151	Cutter No. 151	3/8" – 1¼"	1 each
TC-152	Cutter No. 152	1¼" – 2"	1 each
E-5272	Cutter wheel	1¼" – 2"	1 each

Note: To cut 1¼" to 2" size CounterStrike® use a cutting wheel 5272 or equal.

AutoSnap®

Lightning Fast Connections from OmegaFlex®

The new patent pending **AutoSnap®** fittings are the only CSST fittings that do not require any disassembly or reassembly of the fitting to the CounterStrike® CSST.

This greatly reduces installation difficulty and time as there are no small loose gaskets, O-rings, or retainer rings to contend with in a dark and/or cold work place environment!

AutoSnap is CSA listed and features a metal to metal cup seal without any exposed stainless steel pipe behind the new fitting.

Reduced torque value and reusability all make for an optimum installer friendly fitting!

AutoSnap® Fittings

Brass Straight Fitting

Fitting Sizes 1¼", 1½" and 2" are sold individually

Brass Split Rings

Brass Reducing Fitting

Brass Female Straight Fitting

Brass Coupling

Wallbox with Valve

Brass Flange Fitting and Stainless Steel Plate

Part Number	Description	Size	Pkg. Qty
SFST-375N	*AutoSnap* Straight 3/8"	3/8"-3/8" NPT	24/box
SFST-375	*AutoSnap* 3/8" (1/2" NPT)	3/8"	24/box
SFST-500	*AutoSnap* 1/2"	1/2"	24/box
SFST-750	*AutoSnap* 3/4"	3/4"	16/box
SFST-1000	*AutoSnap* 1"	1"	16/box
SFST-1250	*AutoSnap* 1¼"	1¼"	6/box
SFST-1500	*AutoSnap* 1½"	1½"	4/box
SFST-2000	*AutoSnap* 2"	2"	4/box
SRING-375	Spare Snap Rings	3/8"	5/pack
SRING-500	Spare Snap Rings	1/2"	5/pack
SRING-750	Spare Snap Rings	3/4"	5/pack
SRING-1000	Spare Snap Rings	1"	5/pack
SRING-1250	Spare Snap Rings	1¼"	2/pack
SRING-1500	Spare Snap Rings	1½"	2/pack
SRING-2000	Spare Snap Rings	2"	2/pack
SRST500-750	*AutoSnap* Reducing 1/2"	1/2"-3/4" NPT	24/box
SRST750-500	*AutoSnap* Reducing 3/4"	3/4"-1/2" NPT	16/box
SRST1000-750	*AutoSnap* Reducing 1"	1"-3/4" NPT	16/box
SFSTF-375	*AutoSnap* Female Straight 3/8"	3/8"-1/2" NPT	24/box
SFSTF-500	*AutoSnap* Female Straight 1/2"	1/2"	24/box
SFSTF-750	*AutoSnap* Female Straight 3/4"	3/4"	16/box
SFSTF-1000	*AutoSnap* Female Straight 1"	1"	16/box
SCPLG-375	*AutoSnap* Coupling 3/8"	3/8"	24/box
SCPLG-500	*AutoSnap* Coupling 1/2"	1/2"	24/box
SCPLG-750	*AutoSnap* Coupling 3/4"	3/4"	16/box
SCPLG-1000	*AutoSnap* Coupling 1"	1"	16/box
SCPLG-1250	*AutoSnap* Coupling 1¼"	1¼"	6/box
SCPLG-1500	*AutoSnap* Coupling 1½"	1½"	4/box
SCPLG-2000	*AutoSnap* Coupling 2"	2"	4/box
SWBTM-500	*AutoSnap* Metal Wallbox w/valve 1/2"	1/2"	24/box
SWBTM-750	*AutoSnap* Metal Wallbox w/valve 3/4"	3/4"	24/box
SRFG-375	*AutoSnap* Flange Fitting 3/8"	3/8"	12/box
SRFG-500	*AutoSnap* Flange Fitting 1/2"	1/2"	12/box
SRFG-750	*AutoSnap* Flange Fitting 3/4"	3/4"	8/box
SRFG-1000	*AutoSnap* Flange Fitting 1"	1"	8/box
SRFG-1250	*AutoSnap* Flange Fitting 1¼"	1¼"	4/box

AutoSnap®

AutoSnap® Tee Fittings

Brass Tee Fitting

TracPipeCounterStrike By NPT

Part Number	Description	Size	Pkg Qty
ST500-750	***AutoSnap*** Tee - Male 3/4"	1/2"-3/4" male	12/box
ST500-500	***AutoSnap*** Tee - Female 1/2"	1/2" Female	14/box
ST750-500	***AutoSnap*** Tee - Female 1/2"	3/4"-1/2" Female	10/box
ST750-750	***AutoSnap*** Tee - Female 3/4"	3/4" Female	10/box
ST1000-1000	***AutoSnap*** Tee - Female 1"	1" Female	6/box

Brass Tee Fitting

TracPipeCounterStrike / All Outlets

Part Number	Description	Size	Pkg Qty
STF500-T500	***AutoSnap*** Tee - ***All outlets 1/2"***	1/2" X 1/2"	14/box
STF750-T750	***AutoSnap*** Tee - ***All outlets 3/4"***	3/4" X 3/4"	12/box
STF1000-T1000	***AutoSnap*** Tee - ***All outlets 1"***	1" X 1"	6/box
SRT-501	***AutoSnap*** Tee Reducer	1/2" X 3/8" X 3/8"	14/box
SRT-751	***AutoSnap*** Tee Reducer	3/4" X 1/2" X 3/8"	12/box
SRT-752	***AutoSnap*** Tee Reducer	3/4" X 1/2" X 1/2"	12/box
SRT-1001	***AutoSnap*** Tee Reducer	1" X 3/4" X 1/2"	6/box
SRT-1002	***AutoSnap*** Tee Reducer	1" X 3/4" X 3/4"	6/box
STF750-T500	***AutoSnap*** Tee Reducer	3/4" X 3/4" X 1/2"	12/box
STF1000-T750	***AutoSnap*** Tee Reducer	1" X 1" X 3/4"	6/box
STF1000-T500	***AutoSnap*** Tee Reducer	1" X 1" X 1/2"	6/box

Brass Reducer Tee Fitting

AutoFlare® Fittings

Self-Flaring Fitting

AutoFlare® is the self-piloting fitting that attaches TracPipe®CounterStrike® to traditional gas fittings and appliances. No special tools or additional parts required.

AutoFlare® Fittings and Accessories

Brass Straight Mechanical Fitting

Brass Reducing Fitting

Fitting Sizes 1¼", 1½" and 2" are sold individually

Brass Split Rings

Brass Female Straight Fitting

Part Number	Description		
FST-375N	***AutoFlare*** Straight 3/8"	3/8"(3/8"NPT)	24/box
FST-375	***AutoFlare*** Straight 3/8"	3/8"(1/2"NPT)	24/box
FST-500	***AutoFlare*** Straight 1/2"	1/2"	24/box
RST500-750	***AutoFlare*** Reducing 1/2"	1/2"-3/4"NPT	24/box
FST-750	***AutoFlare*** Straight 3/4"	3/4"	16/box
RST750-500	***AutoFlare*** Reducing 3/4"	3/4"-1/2"NPT	16/box
FST-1000	***AutoFlare*** Straight 1"	1"	16/box
RST1000-750	***AutoFlare*** Reducing 1"	1"-3/4"NPT	16/box
FST-1250	***AutoFlare*** Straight 1¼"	1¼"	6/box
FST-1500	***AutoFlare*** Straight 1½"	1½"	4/box
FST-2000	***AutoFlare*** Straight 2"	2"	4/box
RING-375	Spare Split Rings	3/8"	10/pack
RING-500	Spare Split Rings	1/2"	10/pack
RING-750	Spare Split Rings	3/4"	10/pack
RING-1000	Spare Split Rings	1"	10/pack
RING-1250	Spare Split Rings	1¼"	4/pack
RING-1500	Spare Split Rings	1½"	4/pack
RING-2000	Spare Split Rings	2"	4/pack
FSTF-375	***AutoFlare*** Female Straight 3/8"	3/8"-1/2"NPT	24/box
FSTF-500	***AutoFlare*** Female Straight 1/2"	1/2"	24/box
FSTF-750	***AutoFlare*** Female Straight 3/4"	3/4"	16/box
FSTF-1000	***AutoFlare*** Female Straight 1"	1"	16/box

AutoFlare® Fittings

Brass Coupling

Part Number	Description	Size	Pkg Qty
CPLG-375	Coupling 3/8"	3/8"	24/box
CPLG-500	Coupling 1/2"	1/2"	24/box
CPLG-750	Coupling 3/4"	3/4"	16/box
CPLG-1000	Coupling 1"	1"	16/box
CPLG-1250	Coupling 1¼"	1¼"	6/box
CPLG-1500	Coupling 1½"	1½"	4/box
CPLG-2000	Coupling 2"	2"	4/box

Brass Flange Mount Fittings

Part Number	Description	Size	Pkg Qty
BFF-375	***AutoFlare*** Flange Fitting 3/8"	3/8"	12/box
BFF-500	***AutoFlare*** Flange Fitting 1/2"	1/2"	12/box
BFF-750	***AutoFlare*** Flange Fitting 3/4"	3/4"	8/box
BFF-1000	***AutoFlare*** Flange Fitting 1"	1"	8/box
BFF-1250	***AutoFlare*** Flange Fitting 1¼"	1¼"	4/box
TERM-BRAC	***AutoFlare*** Flange L Bracket	All	1 each

Brass Flange Mount Fittings

Part Number	Description	Size	Pkg Qty
ELLB-375	90º Flange Fitting 3/8"	3/8"	8/box
ELLB-500	90º Flange Fitting 1/2"	1/2"	8/box
BF90V-375	90º Flange Valve 3/8"	3/8"	6/box
BF90V-500	90º Flange Valve 1/2"	1/2"	6/box
BF90V-750	90º Flange Valve 3/4	3/4"	6/box

Termination Mount Brass and Stainless Steel

Part Number	Description	Size	Pkg Qty
TM-375	Termination Mount 3/8"	3/8"	12/box
TM-500	Termination Mount 1/2"	1/2"	12/box
TM-750	Termination Mount 3/4"	3/4"	8/box
TM-750-500	Termination Mount 3/4" x 1/2"	3/4" x 1/2"	12/box
TM-1000	Termination Mount 1"	1"	8/box
90TM-375	90º Termination Mount 3/8"	3/8"	8/box
90TM-500	90º Termination Mount 1/2"	1/2"	8/box
TM90V-375	90º Termination Valve 3/8"	3/8"	12/box
TM90V-500	90º Termination Valve 1/2"	1/2"	12/box
TM90V-750	90º Termination Valve 3/4"	3/4"	12/box

AutoFlare® Tee Fittings

AutoFlare® Tee Fittings

Brass Tee Fitting

CounterStrike by NPT

Part Number	Description	Size	Pkg Qty
T500-750	Tee - Male 3/4"	1/2-3/4" male	12/box
T500-500	Tee - Female 1/2"	1/2" Female	14/box
T750-500	Tee - Female 1/2"	3/4-1/2" Female	12/box
T750-750	Tee - Female 3/4"	3/4" Female	12/box
T1000-1000	Tee - Female 1"	1" Female	10/box

Brass Tee Fitting

Brass Reducer Tee Fitting

CounterStrike / All Outlets

Part Number	Description	Size	Pkg Qty
TF500-T500	Tee - ***All Outlets 1/2"***	1/2 x 1/2"	14/box
TF750-T750	Tee - ***All Outlets 3/4"***	3/4 x 3/4"	12/box
TF1000T1000	Tee - ***All Outlets 1"***	1 x 1"	10/box
FGP-RT-501	Tee-Reducer	1/2" x 3/8" x 3/8"	14/box
FGP-RT-751	Tee-Reducer	3/4" x 1/2" x 3/8"	12/box
FGP-RT-752	Tee-Reducer	3/4" x 1/2" x 1/2"	12/box
FGP-RT-1001	Tee-Reducer	1" x 3/4" x 1/2"	10/box
FGP-RT-1002	Tee-Reducer	1" x 3/4" x 3/4"	10/box
FGP-TF750-T500	Tee-Reducer	3/4" x 3/4" x 1/2"	12/box
FGP-TF1000-T750	Tee-Reducer	1" x 1" x 3/4"	10/box
FGP-TF1000-T500	Tee-Reducer	1" x 1" x 1/2"	10/box
FGP-TF1250-T1000	Tee-Reducer	1¼" x 1¼" x 1"	1 each

AutoFlare® Tee Fittings continued

Brass Commercial Sized Reducer Tees

Part Number	Description	Size	Pkg. Qty
TF1250-T750	Tee-Reducer	1¼" x 1¼" x 3/4"	1 each
TF1250-T500	Tee-Reducer	1¼" x 1¼" x 1/2"	1 each
FGP-RT-1251	Tee-Reducer	1¼" x 1" x 1"	1 each
FGP-RT-1252	Tee-Reducer	1¼" x 1" x 3/4"	1 each
FGP-RT-1253	Tee-Reducer	1¼" x 1" x 1/2"	1 each
TF1500-T1250	Tee-Reducer	1½" x 1½" x 1¼"	1 each
TF1500-T1000	Tee-Reducer	1½" x 1½" x 1"	1 each
TF1500-T750	Tee-Reducer	1½" x 1½" x 3/4"	1 each
TF1500-T500	Tee-Reducer	1½" x 1½" x 1/2"	1 each
FGP-RT-1501	Tee-Reducer	1½" x 1¼" x 1¼"	1 each
FGP-RT-1502	Tee-Reducer	1½" x 1¼" x 1"	1 each
FGP-RT-1503	Tee-Reducer	1½" x 1¼" x 3/4"	1 each
FGP-RT-1504	Tee-Reducer	1½" x 1¼" x 1/2"	1 each
TF2000-T1500	Tee-Reducer	2" x 2" x 1½"	1 each
TF2000-T1250	Tee-Reducer	2" x 2" x 1¼"	1 each
TF2000-T1000	Tee-Reducer	2" x 2" x 1"	1 each
TF2000-T750	Tee-Reducer	2" x 2" x 3/4"	1 each
TF2000-T500	Tee-Reducer	2" x 2" x 1/2"	1 each
FGP-RT-2001	Tee-Reducer	2" x 1½" x 1½"	1 each
FGP-RT-2002	Tee-Reducer	2" x 1½" x 1¼"	1 each
FGP-RT-2003	Tee-Reducer	2" x 1½" x 1"	1 each
FGP-RT-2004	Tee-Reducer	2" x 1½" x 3/4"	1 each
FGP-RT-2005	Tee-Reducer	2" x 1½" x 1/2"	1 each

CounterStrike® Accessories

Floppy Strip Wound Conduit Type RW Galvanized Steel

Silicone Tape

Part Number	Description	Size	Pkg Qty
FPY-375CT	Floppy-fits 3/8" Cut 1 ft.	3/4"	50 box
FPY-500CT	Floppy-fits 1/2" Cut 1 ft.	1"	50 box
FPY-750CT	Floppy-fits 3/4" Cut 1 ft.	1¼"	25 box
FPY-1000CT	Floppy-fits 1" Cut 1 ft.	1½"	25 box
FPY-375-50	Floppy-fits 3/8"	3/4"	50 ft/coil
FPY-500-50	Floppy-fits 1/2"	1"	50 ft/coil
FPY-750-25	Floppy-fits 3/4"	1¼"	25 ft/coil
FPY-1000-25	Floppy-fits 1"	1½"	25 ft/coil
FPY-1250-25	Floppy-fits 1¼"	2"	25 ft/coil
FPY-1500-25	Floppy-fits 1½"	2½"	25 ft/coil
FPY-2000-25	Floppy-fits 2"	3"	25 ft/coil
915-10H-12	Tape-Yellow	1" x 12 yd	Roll 12 yd
915-10H-12BL	Tape-Black	1" x 12 yd	Roll 12 yd

**Part numbers ending in CT are cut into 1' sections which is an adequate length for many applications.*

AutoFlare® Fittings and Accessories

Brackets and Stub-outs

Meter Termination

Meter Termination Bracket

Wallbox with Valve

Note: Wallbox measures 7" x 7" x 3"

Part Number	Description	Size
KVB-375	Key Valve Bracket	3/8"
KVB-500	Key Valve Bracket	1/2"
KVB750-500	Key Valve Bracket - Reducing	3/4" x 1/2"
FGP-1X6 MT	1" x 6" Meter Term Stub-out	1" x 6"
FGP-1X12 MT	1" x 12" Meter Term Stub-out	1" x 12"
FGP-STUD-BRAC	Meter Stud Bracket	all
FGP-ASP-500	Appliance Stub-out	1/2" x 2"
FPT-500	Fireplace Stub-out	1/2"
FGP-ASP90S-500	1/2" x 90° Stub Out	1/2" x 5" x 5"
FGP-ASP90S-750	3/4" x 90° Stub Out	3/4" x 5" x 5"
MT6-500	6" Meter Termination 1/2"	1/2" x 6"
MT6-750	6" Meter Termination 3/4"	3/4"
MT6-1000	6" Meter Termination 1"	1"
MT9-1000	9" Meter Termination 1"	1"
MT12-500	12" Meter Termination 1/2"	1/2"
MT12-750	12" Meter Termination 3/4"	3/4"
MT12-1000	12" Meter Termination 1"	1"
MT-BRAC	Meter Termination Bracket	1"
WBTM-375	***AutoFlare*** Metal Wallbox w/Valve	3/8"
WBTM-500	***AutoFlare*** Metal Wallbox w/Valve	1/2"
WBTM-750	***AutoFlare*** Metal Wallbox w/Valve	3/4"

CounterStrike® Accessories

CounterStrike® Accessories

Large Manifolds
4 ports 1" female

Manifold Bracket
For use with FGP-MI-PC only

Stackable Manifold Bracket

Brass Bonding Clamp

Gas Load Center
Painted Steel

Gas Load Center w/Manifold Bracket For use with FGP-MI-PC only

Part Number	Description	Size	Pkg Qty
MI-PC	Coated Manifold	3/4" x 1/2" x 1/2"(4)	1 each
FGP-MB2	Manifold Bracket	----	1 each
MI-ST-500	Stackable Manifold	1/2"F - M X 1/2"(2)	1 each
MI-ST-750	Stackable Manifold	3/4"F - M X 1/2"(2)	1 each
FGP-MB-ST	Stackable Manifold Bracket	MI-ST	1 each
FGP-LC	Load Center w/Bracket	----	1 each
MI-PC-1X	Large Coated Manifold	1¼" x 1" x 3/4"(4)	1 each
MI-PC-2X	Large Coated Manifold	2" x 1½" x 1"(4)	1 each
FGP-GC-1	Bonding Clamp	3/8", 1/2" **(TP/CS)** 1/2", 3/4", 1" **(Iron pipe)**	1 each
FGP-GC-2	Bonding Clamp	3/4", 1", 1¼" **(TP/CS)** 1¼", 1½", 2" **(Iron pipe)**	1 each
FGP-GC-3	Bonding Clamp	1½", 2" **(TP/CS)** 2½" – 4" **(Iron pipe)**	1 each

INSTALLATION HANGER BRACKETS

Item #	For TracPipe Size
A552-L	3/8"
A553-L	1/2"
A554-L	3/4"
TracPipe clips w/SS Screws	
556-2HSDR	1/2"
556-3HSDR	3/4"

APPLIANCE REGULATORS FOR 2 PSI SYSTEMS

N5 SERIES GAS REGULATOR

The NS Series gas regulator is a certified CSA 6.22/ANSI Z21.80 self-operating regulator with vent limiting option for use in residential, commercial and industrial applications. The NS vent limiting option allows for indoor use without the need to pipe external vent lines. With the added benefit of extended corrosion resistance the NS allows for various applications where the best regulation performance is required.

ITEM #	CAPACITY	INLET	OUTLET	OUTLET PRESSURE
N5B-0500-S	638,000	1/2"	1/2"	7-11" LP
N5B-0750-S	638,000	3/4"	3/4"	7-11" LP
N5B-0500-S	1,013,000	1/2"	1/2"	7-11" NG
N5B-0750S	1,013,000	3/4"	3/4"	7-11" NG
N5C-1250-S	1,077,000	1 1/4"	1 1/4"	7-11" LP
N5C-1250-S	1,710,000	1 1/4"	1 1/4"	7-11" NG
VE0375	Vent Limiter Elbow for N5B Series Regulators			
VE0500	Vent Limiter Elbow for N5C Series Regulators			

Capacities are based on 2 psig inlet pressure. Inlet pressure can be up to 15 psig, but 2 psig is the maximum inlet in order to retain CSA certification.

VE0375 & **VE0500** Vent Limiter Elbow allows these regulators to also be mounted vertically while maintaining a horizontal position of the vent limiting device.

OARA Regulators

The 1/2" and 3/4" regulators include an approved vent limiter for indoor installations. The 1 1/4" must be vented to the outside.

ITEM #	CAPACITY	INLET	OUTLET	OUTLET PRESSURE
44-1-190004*	368,000	1/2"	1/2"	7-11"LP, Set @ 11"
44-1-290003*	741,000	3/4"	3/4"	7-11"LP, Set @ 11"
44-1-1900002*	270,000	1/2"	1/2"	7-11"NG, Set @8"
44-1-2900002*	509,000	3/4"	3/4"	7-11"NG, Set @8"
M325-7-11/4	900,000	1 1/4"	1 1/4"	11"

These regulators are designed to accept an inlet pressure of 2#.

Accessories: Maxicap-3 Cover for 1/2" Regulator Maxicap-5 Cover for 3/4" Regulator

13A15 Vent Limiter Cap, Cover for 1/2"Regulator
13A15-5 Vent Limiter Cap, 3/4" Regulator

(*Must be installed in the horizontal position)

TracPipe® PS-II Underground Gas Piping

TracPipe® PS-II Underground Gas Piping PATENTED - Improved

Now available! ***TracPipe PS-II*** is a pre-sleeved gas installation system for underground, rooftop, or exterior wall applications that is more cost-effective and easier to install vs. our original ***TracPipe PS*** system.

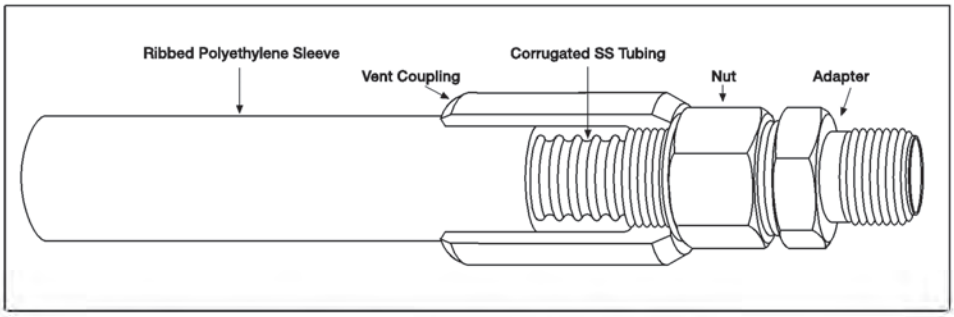

Part Number	Description	Size	Reel Length
FGP-UGP-375-250	*TracPipe PS-II* 3/8"	3/8"	250 ft./reel
FGP-UGP-500-250	*TracPipe PS-II* 1/2"	1/2"	250 ft./reel
FGP-UGP-500-100	*TracPipe PS-II* 1/2"	1/2"	100 ft./reel
FGP-UGP-750-250	*TracPipe PS-II* 3/4"	3/4"	250 ft./reel
FGP-UGP-750-100	*TracPipe PS-II* 3/4"	3/4"	100 ft./reel
FGP-UGP-100-250	*TracPipe PS-II* 1"	1"	250 ft./reel
FGP-UGP-100-100	*TracPipe PS-II* 1"	1"	100 ft./reel
FGP-UGP-125-150	*TracPipe PS-II* 1¼"	1¼"	150 ft./reel
FGP-UGP-150-150	*TracPipe PS-II* 1½"	1½"	150 ft./reel
FGP-UGP-200-150	*TracPipe PS-II* 2"	2"	150 ft./reel

Male Adapters

Part Number	Description	Size	Pkg Qty
FGP-UGF-375	*TracPipe PS-II* Male Adapter	3/8" NPT Male	25/box
FGP-UGF-500	*TracPipe PS-II* Male Adapter	1/2" NPT Male	20/box
FGP-UGF-750	*TracPipe PS-II* Male Adapter	3/4" NPT Male	16/box
FGP-UGF-1000	*TracPipe PS-II* Male Adapter	1" NPT Male	9/box
FGP-UGF-1250	*TracPipe PS-II* Male Adapter	1¼" NPT Male	9/box
FGP-UGF-1500	*TracPipe PS-II* Male Adapter	1½" NPT Male	9/box
FGP-UGF-2000	*TracPipe PS-II* Male Adapter	2" NPT Male	5/box

Couplings

Part Number	Description	Size	Pkg Qty
FGP-UGC-375	*TracPipe PS-II* Coupling	3/8" T/P Coupling	25/box
FGP-UGC-500	*TracPipe PS-II* Coupling	1/2" T/P Coupling	20/box
FGP-UGC-750	*TracPipe PS-II* Coupling	3/4" T/P Coupling	16/box
FGP-UGC-1000	*TracPipe PS-II* Coupling	1" T/P Coupling	9/box
FGP-UGC-1250	*TracPipe PS-II* Coupling	1¼" T/P Coupling	9/box
FGP-UGC-1500	*TracPipe PS-II* Coupling	1½" T/P Coupling	8/box
FGP-UGC-2000	*TracPipe PS-II* Coupling	2" T/P Coupling	5/box

TRACPIPE ACCESSORIES, GAUGES

GAS BREAKER EXCESS FLOW SAFETY VALVES

AutoTrip Excess Flow Valves Description	Part Number	Typical Load (SCFH)	Max Load (BTU/Hour)	Nominal Appliance Connector Size	Inlet Thread Connections	Outlet Thread Connections
Applicance Valve	AFD-80	75	80,000	1/4'	1/2' M-NPT 3/8' F-NPT	3/8' Flare
Appliance Valve	AFD-100A	100	100,000	3/8'	1/2' M-NPT 3/8' F-NPT	1/2' Flare
Appliance Valve	AFD-130A	125	130,000	1/2'	3/4' M-NPT 3/8' F-NPT	5/8' Flare
Appliance Valve	AFD-130B	130	130,000	1/2'	3/4' M-NPT 1/2' F-NPT	5/8' Flare
Meter/ Line Valve	LFD-125	120	125,000	n/a	3/4' M-NPT 1/2' F-NPT	3/4' M-NPT 1/2' F-NPT
Meter/ Line Valve	LFD-275A	125	275,000	n/a	3/4' M-NPT 1/2' F-NPT	3/4' M-NPT 1/2' F-NPT
Meter/ Line Valve	LFD-375A	180	375,000	n/a	1' M-NPT 3/4' F-NPT	1' M-NPT 3/4' F-NPT

PRESSURE GAUGES

HIGH PRESSURE GAUGES

2" Dial, 1/4" NPT Bottom or Back Inlet

Pressure Range	Bottom Inlet	Back Inlet
0-5 #	J499	—
0-15 #	J500	J510
0-30 #	J501	J511
0-60 #	J502	J512
0-100 #	J503	J513
0-200 #	J504	—
0-300 #	J506	J516
0-400 #	**J542	—

* For LPG or NH3 Service
** Glycerine filled

BRASS CASE HIGH PRESSURE GAUGES

2" Dial, 1/4" NPT Bottom Inlet

Item #	Pressure Range
B115-30	0-30 #
B115-60	0-60 #
B115-100	0-100 #
B115-300	0-300 #

LIQUID FILLED GAUGES

Liquid filled gauges dampen pulsation and vibration under severe operating conditions such as compressors, pumps, etc.

Pressure Range	Bottom Inlet	Back Inlet
0-300#	B213-300BM-S*	B213-300BK*
0-400#	B213-400BM*	B213-400BK*
0-400#	J542**	J524**
0-30#	B213-30BM*	

*Stainless steel dial, brass stem
**Stainless steel dial and stem for LPG or NH3 service

D2020 MAGNAHELIC PRESSURE GAUGE

4" Dial, 1/8" high and low pressure taps. Indicates positive, negative, or differential pressure. Rated total pressure: -20"Hg. to 15 psig.

DA432 CARRYING CASE

GA P500

4 1/2" Steel Case Pressure Gauge
0-300 #, 1/4" Bottom Inlet

PRESSURE GAUGE ACCESSORIES

MINIATURE RAY SNUBBER ME-204

1/4" Male x Female Snubber comes with three pistons for different snubbing levels.

PRESSURE TEST ASSEMBLIES

STA1-30# OR STA1-300#

This pressure test assembly is to check for possible gas leaks in piping systems where service is interrupted, such as "out of gas" conditions. It is not to be used as the only means of testing new gas systems or existing systems where new equipment is installed. See NFPA54 for leak testing requirements in these systems. Schraeder valve (pack of 6) and hardshell carrying case included. Available in 30# and 300# configurations for testing downstream of 1st stage regulators.

STA1-300# - uses the VA series valve adapters for pressure testing.
STA1-30# - uses the VB series valve adapters for pressure testing.

Adapters

ME-VA1 - connects to the standard Schraeder valve, 1/8"

ME-VA2 - connects to the standard Schraeder valve, 1/4"

ME-VB1 - Connects to the Presto Tap type valve, 1/8"
ME-VB2 - connects to the Presto Tap type valve, 1/4"

STA-2

Male X Female POL flexible tool for pressure testing service lines following out of gas calls. Installs between the service valve and regulator pigtail.

- Flexible design allows for easy installation with minimum movement of pigtail, even in underground tanks.
- Shut-off valve prevents leaking service valve from affecting pressure test.
- Shipped in a hardshell plastic case.

STA-2-H - replacement hose, 2 required per unit.

HIGH PRESSURE TEST BLOCK MEJ610-30

For pressure testing new piping systems

G64-002 SCHRADER VALVE

HPTA

High pressure test block, no gauge.

UNIVERSAL PRESSURE TEST KIT

ME-SKVA - Type A - standard Schrader valve connection

ME-SKVB - Type B - 1/4" flare style Schrader valve connection

PT30LP

0-30# pressure test gauge assembly with holster.

PT-RVQA-90

1/4", 90° Presto-Tap replacement adapter.

PRESSURE TEST ASSEMBLIES

MGK-1

Coated magnahelic gauge kit.

SRB-1 Replacement Silicone Rubber Hose Boot

ETGKB-2

Engine test kit with tachometer.

WATER MANOMETERS

D1212
SLACK TUBE MANOMETER KIT

Kit includes:

- D1211-16 slack tube manometer
- Plastic carrying case
- 3/4 oz. bottle of fluorescent green color concentrate with wetting agent
- Two 1/8" pipe thread rubber tubing adaptors
- 1/8" to 1/4" pipe thread bushing
- 3' of 1/4" ID rubber tubing
- Rubber tubing adaptor to fit standard 7/16" spud.

D1222

Economy Water Manometer
Rigid manometer with 2 magnets, bottle of dye, and 3' of 5/16" ID tubing.

EESL1006

Replacement Hose

PRESSURE TEST EQUIPMENT & LIFT TRUCK GAUGES

ELECTRONIC MANOMETERS

Functions

- Range of -60 to +60 inH2O
- Differential pressure

Features

- Measures in 11 scales; inH2O, psi, bar, mBar, kPa, inHG, mmHG, ozin, FtH2O, cmH2O and kgcm.
- Magnetic mount
- Auto ranging
- Backlit display
- Data hold
- Max/Min
- Zero button

Includes
Flexible silicone 18" tubing (2) 1/4" diameter
Barbed gas valve fitting 2 (BF102) Soft pouch
(7.48" x 4.33" x 1.96") Manual
Battery

Warranty
1-Year limited warranty

Accessories:
AC319 - Soft shell carrying case
BF100 - Replacement brass adapter

PRESSURE TEST VALVES

PT-RVQA-90

1/4" Presto Tap adapter, 90°

ME-HSA & ME-HSB
GAUGE SWIVEL ADAPTERS
The ME-HSA and ME-HSB adapters add a swivel feature to the test kits making connections much easier to connect to and utilize in tight spaces. HSA for type A valves
Use **ME-HSB** for type B valves

ME-VA & ME-VB PRESSURE TEST VALVES
Valve without 54 orifice. Can be used in low pressure applications or in openings which have a 54 orifice (Fisher regulators & Sherwood tank valves have a 54 ofifice in their pressure taps and can use this valve).

ME-VA1

ME-VA2

ME-VB1

ME-VB2

ME-VA1	SCHRADER VALVE WITH 1/8" MIP CONNECTION
ME-VA2	SCHRADER VALVE WITH 1/4" MIP CONNECTION

ME-VB1	1/8" M x M. FLARE
ME-VB2	1/4" M x M. FLARE

VA style valves have standard Schrader valve style connection.
VB style valves have a male flare style connection compatible with all "Presto-Tap" equipment.

PRESSURE TEST VALVE KITS

These valves are designed to be installed into regulator pressure taps (1/8" NPT), or other pressure taps in the system, for pressure reading without "breaking the system".

ME-QTG127A & ME-QTG128B GAUGE KITS

These dual gauge kits are used for leak check testing at intermediate pressures using the 30 psi gauge and also leak check test at tank pressure using the 300 psi gauge and the high pressure test block supplied with the kit. The hose assembly connection to the system via the pressure tap valve incorporates a quick disconnect fitting to either pressure gauge. Kit includes six pressure tap valves, either type A or type B depending on which kit is specified.
ME-QTG127A for type A valves
ME-QTG128B for type B valves

ME-SQTG4AA & ME-SQTG4BA GAUGE KITS

These four gauge kits include a 30 psi, 300 psi, 5 psi gauge, and a 35" water column gauge and a high pressure test block plus six pressure tape valves either type A or type B depending on which kit is specified. The hose quick disconnect allows for attachment of any one of the gauges. A leak check pressure tap valve can be anywhere in the system with the proper gauge attached for leak check testing. This kit also allows the service technician to test all pressure regulators, including the first stage, using the 30 psi gauge, a 2 psi regulator using the 5 psi gauge, and low pressure 11' W.C. regulators or appliance manifold pressure using the 35" WC gauge.
ME-**SQTG4AA** for type A valves
ME-**SQTG4BA** for type B valves

Both style kits contain adapters for both type A & B Kits.

LIFT TRUCK CYLINDER GAUGES

Cylinder Size	Item#		
	Flange Mounted	3/4" Threaded	1" Threaded
20# Universal	LT20-U		LT20-U-BS
33# Universal	MES1284-001U	MES1284-001U	MES2284-001U
43# Universal	LT43-U	LT43-U-3/4	LT43-U-BS

MAGNETIC FLOAT GAUGES

For lift truck cylinders, ASME tanks, 420# cylinders, and motor fuel tanks

DOMESTIC TANK GAUGES

The item numbers are for junior flush mounted gauges. If the gauge is mounted on a riser, add the height of the riser to the part number, i.e. a gauge for a 41" diameter tank with a 4 1/2" riser is TJ41-4 1/2.

Available in remote and non-remote styles. Standard dial is non-remote.

SR TANK GAUGES

Tank Diameter	Item # (Flanged Only)
24"	SA130A
30"	SA160A
37"	SA194A
41"	SA214A

TYPICAL GAUGE SIZING GUIDE

TANK	
120 Gallon	24" diameter
250/350 Gallon	30" diameter
500 Gallon	37" diameter
1000 Gallon	41" diameter

420# CYLINDER GAUGES

Item #	Description
JA250J	Junior flange mount gauge
MES3981-001R	1" threaded gauge

150 GALLON HORIZONTAL GAUGE

Item #	Description
TA130 A	1 1/4" threaded gauge for top mount installation . For tank diameters of 24".

DFG3010

Replacement gauge for Manchester M681438L 100# A.S.M.E. Cylinder.

DFG3010-D

Dial for above replacement gauge.

GAUGES FOR LARGE STORAGE TANKS

TAYLOR GAUGES

Item #*	Tank Diameter
M072H4202B	72"
M109H4202B	108"
M129H4102B	130"

*Add -A suffix to include flange adaptor for tank inlet.

Item #	Tank Diameter
M4102ADL	Taylor Replacement dial
R5015S00481	Rochester 8" bolts
VIS3350X2	Set of 8 screws
VIS4102BO	O-ring
VIS4102BG	Gasket
R003-00022	Rochester 8" crystal
VIS1032-1	Screw for 8" dial

GAUGE DRILL GUIDE

Centers drill bit for drilling out broken gauge screws.

Item #	Gauge Size
FGDG-JR	Junior guide
FGDG-SR	Senior guide
FGDG-JR-TAP	Junior tap
FGDG-SR-TAP	Senior tap
FGDG-JR-DR	Junior Drill Bit
FGDG-SR-DR	Senior Drill Bit

JR Dials - use #3 bit, JR Tap is 1/4-28.
SR Dials - use LTR.I bit, JR Tap is 5/16-24.

JR Dials - use #3 bit.
SR Dials - use LTR.I bit.

REPLACEMENT DIAL ASSEMBLIES

ROCHESTER DIALS

R5-39

R5-1951

RS17-5-39

R5-2591

Item #	Dial Size	Application
R5-1	Senior	ASME 5-95%
MES1284-002RK	Jr Remote Ready	ASME 5-95%
R5-465	Jr Remote Ready	Vertical DOT 10-82%
R5-1951	Snap on	AGVertical DOT 10-80%
R5-917	Junior	Motor Fuel Tank
R5-413	Screw On	20# Forklift Cylinder
R5-414	Universal	33 1/2# Forklift Cyl.
R5-415	Universal	43 1/2# Forklift Cyl.
R5-2591	Snap On	33 1/2# w/ 3/4" gauge
R5-2445	Snap On	33 1/2# w/ 1 1/4" gauge

MES1284-002K

UNIVERSAL DIALS

For use on ASME tanks.

Item #	Dial Size
RS17-5-1	Senior glue-on kit
RS17-5-39	Junior glue-on kit
MES1284-002K	Taylor junior screw on
CVD-UG	Jr. Replacement Dial for UG Tanks

CVD-BS

TAYLOR VISIBLE REPLACEMENT DIALS

For brass threaded gauges.

Item #	Application
CVD-BS	Domestic tanks, brass screw in gauge head
CVD-MF	Motor fuel tanks
*CVD-33LT-U	33 1/2# universal forklift cylinder, JR bolt on
*CVD-33LT-3/4	33 1/2# universal forklift cylinder, 3/4 threaded
*CVD-33LT-1 1/4	33 1/2# universal forklift cylinder, 1 1/4 threaded
130022	same as CVD-BS, but with remote ready feature Drop In Dial

*43# cylinders use the same replacement dials as the 33# cylinder

GAUGE DIALS & ACCESSORIES, GAS DETECTION

GAUGE REPLACEMENT PARTS

GAUGE REPLACEMENT PARTS:

Gaskets

Item #	Gauge Size
VISJGG	Junior
VISSGG	Senior

Screws

Item #	Gauge Size
VISJGS	Junior
VISSGS	Senior

REMOTE INDICATING GAUGE PARTS

SENDING UNITS

Gauge types:

R - Rochester

T - Taylor

Item #	OHM	Type	Application
136600	90	T	Sender w/ 20' Cable
R5-801	90	R	Dial Only
R5-599	40-	R	Dial Only

*Depending on year make and model, other sending units are available.

12653

RV dial for 3/4" gauge, screw-on Manchester, 90 Ohm.

12846

RV dial for 3/4" gauge, snap-on.

12845

RV dial for 3/4" gauge, screw-on.

RECEIVER 136521

Can be used for remote tank level reading in lieu of tying into gasoline gauge.

GAS LEVEL MONITORING SYSTEMS

SQUIBB-TAYLOR STATIONARY TANK MONITOR

For commercial applications. This system consists of two components - a sensor installed at the propane tank and a monitor placed at a remote location. Propane level in the tank is displayed by the monitor. The 136619 monitor has an alarm that can be adjusted between 0-99%

Item #	Application
136619	Commercial/Industrial - 120 V AC

F100W Remote WiFi Monitor

- 802.11g WIFI
- Easy configuration from any WiFi enabled device (phone, tablet, laptop...)
- 24/7 Access to Data on LevelCon Cloud

Equipped with an accurate hall effect sensor adaptable to nearly any propane tank, the F100 ensures compatibility and performance.

GAS AND CO DETECTORS

SENSIT-TKX

- Finds leaks quickly
- High sensitivity
- Tick rate control
- Low initial cost
- Low maintenance

T719 Combustible Gas Leak Detector

The 719 offers 30ppm sensitivity to detect combustible gases.

Easily operated with one hand, leaks are pinpointed using the audio and visual indicators. An adjustable "tic" rate helps eliminate background gas concentration in contaminated environments.

- Instant response
- 30 ppm (methane) sensitivity
- Adjustable tic rate
- One-hand operation
- Visual and audible leak indication
- 16" gooseneck
- Soft carrying pouch

T725L Combustible Gas Leak Detector

40 PPM methane sensitivity, detects combustible gases including: Methane, Butane, Propane, Gasoline, Diesel and Kerosene. Tick rate can be nullified to eliminate background gas concentration and pinpoint the leak source.

- 40ppm methane sensitivity and bearing defects
- Trace natural gas lines and fittings for leaks
- Check gas equipment for leaks
- Test propane tanks, fittings, lines, and heaters for leaks
- Check propane tanks, fitting lines, and heaters for leaks
- Test confined spaces for gas build-up

GAS AND CO DETECTORS

T775 Carbon Monoxide & Combustible Gas Leak Detector

The T775 is a state-of-the-art Carbon Monoxide and Combustible Gas Leak Detector. It is the first of its kind to combine both detection technologies into one easy to use hand-held affordable instrument.

- One hand operation
- Auto Zero
- Backlight
- Visable and audible alarm

SENSIT® P100 SINGLE GAS MONITOR

SENSIT® P100 is a single gas personal monitor designed to detect and warn the user of hazardous gases in their working environment. SENSIT® P100 gas monitor is durable and easy to use.

Standard Features:
One Button Operation, Audible Alarm, Visual Alarm, Vibration Alarm, STEL and TWA Alarms, Alarm Event Memory, Easy Field Calibration, 2-Year Operation, Compatible with SCal-100 Calibration Station

These are special order sensors, and the gas being selected prior to ordering. They are available for:

- O2 Oxygen
- CO Carbon Monoxide
- H2S Hydrogen Sulfide
- HCN Hydrogen Cyanide
- NO2 Nitrogen Dioxide
- SO2 Sulfur Dioxide

PIPE AND CABLE LOCATOR

CABLE HOUND DSP 88-20-011

The Cable Hound Receiver with Digital Signal Processing (DSP) can filter out virtually all unwanted noise. Can be used to locate gas and water pipes, buried cable, tracer wires, and tapes. Quality padded headphones are included.

OLYMPIAN GAS IGNITERS

GM-3

- Continuous ignition, will not blow out
- Refillable
- Fuel viewing window

GM-9

- 2 pack child-resistant igniters. Buy one, get one free packaging.

GM-3X

- Continuous ignition, will not blow out
- 15" flexible nozzle for hard to reach pilots
- Refillable
- Fuel viewing window

THERMOCOUPLES & GAUGING DRILLS

JOHNSON CONTROLS

STANDARD BASO THERMOCOUPLE

The K15 standard thermocouple is used for Baso, Basoid, and Basotrol valves and switches.

Item #	Length	Millivolt Range
K15DA-18H	18"	20-28 mv
K15DA-24H	24"	20-28 mv
K15DS-30	30"	20-28 mv
K15DA-36H	36"	20-28 mv
K15WS-48	48"	30-35 mv

SNAP-IN THERMOCOUPLE

The K15 Snap-In thermocouple has a snap-in clip for fast, easy assembly to valves and switches and Basotrol valves with automatic pilots.

Item #	Length	Millivolt Range
K15FA-24D	24"	20-28 mv
K15FA-36D	36"	20-28 mv

"HUSKY" HIGH PERFORMANCE THERMOCOUPLE

The K16 "Husky" thermocouple is a heavy duty, high output, high performance thermocouple. It replaces Baso 17D, 50, 58D, 87D, 88D, 97D, 107D, and K15DA thermocouples. Complete with adaptors.

Item #	Length	Millivolt Range
K16BT-18	18"	25-35 mv
K16BT-24	24"	25-35 mv
K16BT-30	30"	25-35 mv
K16BT-36	36"	25-35 mv
K16WT-48	48"	25-35 mv
K16WT-60	60"	25-35 mv
K16WT-72	72"	25-35 mv

"SUPER SLIM JIM" UNIVERSAL REPLACEMENT THERMOCOUPLE

The K19AT is used with all "G" And "H" Baso valves as well as automatic pilot valves made by other control manufacturers whose power unit connector is like the Baso series.

Item #	Length	Millivolt Range
K19AT-18	18"	25-35 mv
K19AT-24	24"	25-35 mv
K19AT-30	30"	25-35 mv
K19AT-36	36"	25-35 mv
K19AT-48	48"	25-35 mv
K19AT-60	60"	25-35 mv
K19AT-72	72"	25-35 mv

PILOT TUBING

ALUMINUM PILOT TUBING

Item #	Description
32-203	3/16" OD 50 ft.
32-204	1/4" OD 50 ft.
32-205	5/16" OD 50 ft.

11CC

1/4" Pilot line nut.

GAUGING DRILL

GAUGING DRILLS

All drills have brass handles with the size stamped on the top and side for quick reference. Individual drills are stocked in sizes 24 (Q24) through 80 (Q80).

GAUGING DRILL SETS

Plastic case displays drills when opened for easy selection. Each space clearly marked for drill size.

Item #	Drill Sizes
QDS-1P*	40-80
QDS-2P*	19-60
QDS-4P	19-39

* These drill sets are available with a metal case. Orifice Chart is included.

PILOT BROACHES

QPB-817	Tapers from .008" to .017"
QPB-1217	Tapers from .012" to .017"
QG3015	Tapers from .003" to .013"

QPB-4313	Taper Broach with handle. Tapers from .003" to .013"

FIVE CORNERED REAMERS

QG5080	# 80 Reamer
QG5090	# 90 Reamer
QG5000	Reamer Kit (# 20 - # 90 Reamer)

REAMERS AND BROACHES

QTL050

Burner Broach

For reaming and cleaning ports. Will fit either QTL-061 handpiece or QTL-072 pin vice. Tapers from 1/8" square.

QTL068

Small Reamer

3/32" diameter

For smaller orifice sizes. Tapered point allows fine adjustment of large or small burners.

QTL069

Medium Reamer

1/8" diameter

For larger orifice sizes.

QTL070

Large Reamer

5/32" diameter

Reams proper diameter hole to allow press fit for QMI-100 adapter.

Use QTL-061 reamer handpiece.

ORIFICES

QA-1 ADAPTER

This adaptor will recondition many old orifice fittings. Remove the existing orifice and hold in the QT-50 anvil. Drill it out with the QT-20 reaming drill which provides the proper hole diameter for the adaptor. Drive the adaptor into the orifice with a light hammer blow. The QT-40 crimping tool is then inserted and struck by a hammer to form a crimp.

PLUG ORIFICES

Item #	Thread	Drill Size	
		LP	Nat
QA-8	16x36	72	56
QA-11	1/4x28	72	56
QA-22	5/16x27	72	56
QA-32	11/32x32	72	56
QA-44	3/8x27	72	56
QA-55	7/16x27	72	56

CAP ORIFICES

Item #	Description	Drill Size	
		LP	Nat
*QC-6	Flat end 3/8" x 27 thread		
QC-8	Flat end 1/8" pipe thread	72	56
QC-9	Removable orifice 3/8" x 27 thread.	78	
	Combination of QC-6 and		
	QA-8 plug orifice		
QCO-401	Cap orifice		

*Note: QC-6 cap orifice is blank and must be drilled to desired size.

PILOT ORIFICES

QBA-718

1/4" compression connection to 7/16" x 27 thread, double orifice, CF-641 included. Replaces Baso# Y90AA orifice. Fits Baso B, C, D, F & R. Double Orifice: LP - .012" area, Nat. - .021" area.

QGR-804

Aluminum - for 1/4" compression connection. Replacement pilot orifice for Robertshaw A1810 pilot (2B). Drill sizes: LP - .008", Nat. - .016".

QGR-813

Aluminum - For 1/4" compression connection. Replacement orifice for Robertshaw A1820 (2C) and A1830 (2CH) pilots.

Drill sizes: LP - .010", Nat. - .018"

QGR-821

Aluminum - For 1/4" Tube size.

Replacement orifice for Robertshaw A1820 (2C) and A1830 (2CH) pilots.

Drill sizes: LP - .010", Nat. - .018"

GAUGING DRILL ACCESSORIES, SERVICE EQUIPMENT & PAINT

ORIFICE KITS

QM-131

Serviceman's Orifice Assortment Kit
Over 300 of the 23 most common orifices in one convenient case. A chart is included describing and illustrating each orifice is on the inside cover of the case.

QM-138

Economy Orifice Assortment Kit
Smaller version of the QM-131. This kit has 203 of the 18 most common orifices.

QM-132

Master Pilot Orifice Kit
Over 100 of the 32 most common pilot orifices. A chart is included describing and illustrating each part and thread size, replacement part number, etc.

QM-137

Economy Pilot Orifice Kit
Smaller version of the QM-132. Kit has 137 of the 18 most common pilot orifices.

BLOWER

B700

Hand held electric blower for heaters, pilots, brooders, etc.

SPECIAL TOOLS

QTL072 PIN VISE

For holding large gauging drills securely while reaming.

QT-50 SAFETY ANVIL

Orifice caps can be held in this anvil while reaming.

QTL061 HAND PIECE

Fits large reamer QTL070 and QTL050 burner broach.

QT-30 DRIVING TOOL

Used to drive QA-1 adapter into recessed areas.

QT-40 CRIMPING TOOL

Used to crimp the QA-1 adapter.

QMI-100K

Includes 200 QA-1 adapters, QTL061 hand piece, QT-40 adapter crimping tool, QT-30 adapter driving tool, QTL070 large reamer and QT-50 safety anvil.

METL051
SERVICEMAN'S FRIEND

For use with flowmeters, monometers and other pressure test equipment. One end is 1/8" MNPT, 1/4" MNPT and special 5/16" x 32 thread. The other end has a regular hose fitting and 1/8" MNPT. The hose can be used on either end.

SUMTER COATINGS PAINT

Sumter Coatings Premium Tank Coatings are formulated specifically for propane tanks to undergo the rigorous conditions that many tanks are exposed to durin their life. Available in popular whites, aluminums, and pastel colors

- GREAT DURABILITY
- GOOD COLOR RETENTION
- GOOD GLOSS RETENTION
- GREAT CAMOUFLAGE

Item #	Color
880W2203	No. 5 Blued white
880W2201	No. 7 Silicone Alkyd
880D4450	Pearl Aluminum Grey Enamel
888S2005	SC2000 Aluminum
888S2006	SC2110 Strontium Chromate Aluminum
886LINE	Enviro-Tuff colors (available in various colors; used mainly for tank domes)

Various other color options are available. Contact your Rutherford Equipment representative to discuss special order options.

PRIMERS AND SPECIALITY PRODUCTS

Part#	Description
880N2209	Foot Ring Protector
855W1370	Uni-Pox Primer
SC-PL005	Penetrol Paint Additive
856X2210	XL Thinner
SC-BC003	Bucket Cover (4 pack)
SC-TTB002	Tank Trim Brush w/ 12" Handle
SC-WB042	Wire Brush w. Metal Scraper
SC-BG001	Bucket Grid w/ Dimple
SC-TR09K	Tank Roller - 9"
SC-CR063	Contour Roller - 7" Complete Assy
SC-CR006	Contour Roller Refill for 7" Assy

***Other Paint Tools & Accessories Are Available

THREAD SEALING COMPOUNDS

GASOILA SOFT-SET

Non-hardening Teflon paste. Non-toxic, easy to apply down to -40°F. Will not stain hands or clothing.

Item	Size
FPSS04 - 1/4	1/4 pint
FPSS08- 1/2	1/2 pint

PLS #2 (JOHN CRANE)

LP Gas Industry's leading compound for sealing pipe joints. UL listed for propane. Spreads easily.

Item #	Size
C00203	1/4 pint (1#)
C00225	1 pint (4#)

JOMAR TEFLON PASTE

High quality multi-use Teflon easy spread thread sealant.

Item #	Size
J400-001	2 oz. tube
J400-002	1/4 pint
J400-003	1/2 pint

JOMAR "GREEN STUFF"

Slow drying, soft setting, non-hardening pipe thread compound.

Item #	Size
J400-102	1/4 pint

RECTORSEAL

Slow drying, soft setting pipe thread sealant.

Item #	Size
Y502	1/4 Pint
Y504	1/2 Pint

TEFLON TAPE

A Teflon sealant that remains plastic permanently, 520" roll

Item #	Width
TEFTAPE	1/2"
TEFTAPE-3/4	3/4"
TEFTAPE-1	1"

YELLOW TEFLON TAPE

Same teflon sealant but yellow in color. 260" roll

Item #	Width
46330	1/2"
46345	3/4"

LIQUID LEAK DETECTOR

5 SECOND SHERLOCK LEAK DETECTOR

Item #	Description
L-1P-EB	1 pint empty bottle w/ brush
L-1P-ESB	1 pint empty spray bottle
*L-1G-L	1 gallon low temperature leak detector (red)
*L-1G-R	1 gallon regular leak detector (blue)

** L-1G-L & L-1G-R are non-corrosive*

METHANOL, DECALS & SIGNS

METHANOL INJECTORS

PURE ANHYDROUS METHANOL

Factory shipped in 55 gallon drums.

METHANOL-PMP

Heavy duty Methanol barrel pump. This heavy duty hand pump features a chemically resistant ryton plastic body with a Viton shaft seal and Teflon flange seal. Light weight corrosion resistant construction. Dispenses 8 oz per revolution.

Includes:

1- Ryton Body Teflon Sealed Pump

1- 2" Bung adapter

1- Attachable filter screen

2- Attachable pump spout

3- Attachable pick-up tubes (allows for use in different sized containers)

ABJ-2 ALCOJECT METHANOL INJECTOR

Holds 5 oz. of methanol. Check valve prevents back flow of propane. Used to add methanol to 100, 200, and 420 lb. cylinders.

Recommended usage:

100 lb. cylinder	3 oz.
200 lb. cylinder	6 oz.
420 lb. cylinder	12 oz.

LC-1 METHANOL INJECTOR

Fill the quart size container with methanol. Attach to the vapor connection on the tank. Pressure equalization forces the methanol into the tank.

CYLINDER DECALS

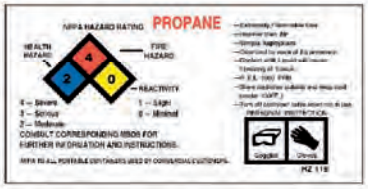

FD/HZ116

FDOT16

CS33

CS33-GHS

V44R

3-in-1 label

- DOT 1075
- NFPA hazard rating
- Warning ANSI/NFPA

Pamphlet 58

4 3/4" x 6 3/4"

V128

Required on horizontal cylinders manufactured prior to 10/1/98.

FDOT53-R

4" x 9" - Printed black on yellow vinyl

CYLINDER DECALS

V56R

3 3/8" x 10" - Red, black, yellow, and blue on white vinyl

V55R

2-in-1 combination

- DOT 1075
- Warning ANSI/NFPA Pamphlet 58

3 3/8" x 7 3/8"

FGHS

The FGHS is a UN1075 cylinder label that is fully customized with your Company Name, Company Address and Company Phone Number.

This is a Special Order Item and the minimum purchase quantity is 2000 per order.

CYLINDER/MOTOR FUEL FILLING DECALS & SIGNS

P111

16"X20" OPD ALERT SIGN.

Explains to your customer why they must have an OPD valve.

LPFI-V121

CYLINDER/MOTOR FUEL FILLING DECALS & SIGNS

LPFI-P101

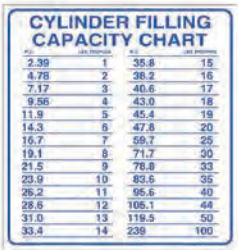

CYLINDER FILLING CAPACITY CHART

2.39	1	35.8	15
4.78	2	38.2	16
7.17	3	40.6	17
9.56	4	43.0	18
11.9	5	45.4	19
14.3	6	47.8	20
16.7	7	59.7	25
19.1	8	71.7	30
21.5	9	76.8	33
23.9	10	83.6	35
26.2	11	95.6	40
28.6	12	105.1	44
31.0	13	119.5	50
33.4	14	239	100

LPFI-P102

FDOT13

14" X 21 1/4"

Cylinder/Motor Fuel Instructions decal.

FDOT13P - Poly Sign

V11

10" X 10" Decal.

V27

3" X 11.5", Black on White Vinyl.

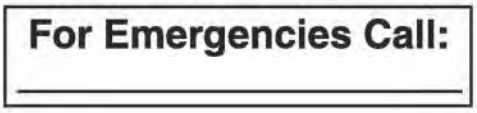

DECALS & SIGNS

CYLINDER/MOTOR FUEL FILLING DECALS & SIGNS

V30

15" X 22" Motor Fuel Filling Decal.

CYLINDER EXCHANGE SIGN

FD/V14

12" X 16" Vinyl Sign

FD/C37G

12" X 24"

Coroplast w/ grommets

PFS

2' x 4'

Aluminum Sign, Double Faced

PFS-FR

Support Frame

NOTE: *PCE, PFS & PFS-FR must ship motor freight due to size.*

Contact Rutherford Equipment for more information.

PCE

2' x 4'

Aluminum Sign, Double Faced

TRUCK DECALS & SIGNS

FPLA

Aluminum Placard Holder

TRUCK DECALS & SIGNS (CONTINUED)

FDOT4

Decal

FDOT3

Vinyl Placard

FDOT4-M

Magnetic Sign

CG126-FO

Metal Flip-over Placard
13 1/2" x 13 1/2"

P13

18" x 24"

P15

22" x 15" Poly, Transport Truck Unloading Procedure

FRRC

4" X 36" Reflective Scotchlite

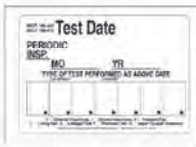

11223344K
55667788T
99000VPILU

V31

6" X 15.5" Annual Inspection Kit (Test Date)

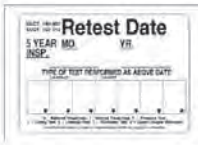

11223344K
55667788T
99000VPILU

V32

6" X 15.5" 5 Year Inspection Kit (Retest Date)

TRUCK DECALS & SIGNS (CONTINUED)

NQT-HV
TEST ____—____
RETEST ____—

FD/V106

QT-WF
TEST ____—____
RETEST ____—

FD/V107

Test/Retest Kits for NQT/QT. Each kit contains 2 thermal die cut sheets plus sheet of numbers.

NQT FNQT

QT FQT

PULL OUT
LIQUID
REEL SWITCH
CLUTCH
MAIN VALVE
BY PASS
THROTTLE
SPRAY FILL
LIQUID
LIQUID
STRAINER
P.T.O.
VAPOR
VAPOR
VAPOR
BACK UP

FDOTV-92
Red on yellow vinyl 16 labels. 3/8" x 1 3/4" each

L.P. GAS

V151
3" x 8.5"
Red on white vinyl decal

FLAMMABLE GAS
PROPANE

V150
5" x 13"
Red on white vinyl decal


HAZARDOUS MATERIAL
SHIPPING PAPER
Liquified Petroleum Gas
2.1(Flammable Gas)
UN 1075
Product: (Non-Corrosive)
Volume: "One Truck Load"
1075
EMERGENCY CONTACT-
POTENTIAL HAZARDS
FIRE OR EXPLOSION
HEALTH
PUBLIC SAFETY
PROTECTIVE CLOTHING
EVACUATION
EMERGENCY RESPONSE
FIRE
SPILL OR LEAK
FIRST AID

7" X 9" - Carried unattached in cab of vehicle

Item #	Product Covered
FDOT-V60	Methanol
FDOT-V83	Bulk Propane
FDOT-V83CYL	Propane Cylinders

VAPOR
FD/VAP

FD/LIQ LIQUID

BULK PLANT/TRUCK DECALS & SIGNS

PROPANE EMERGENCY SHUTOFF
PUSH TO CLOSE

V82
Decal - V82
Poly Sign - ESO/SIGN PSH

PROPANE EMERGENCY SHUTOFF
PULL TO CLOSE

V81
Decal - V81
Poly Sign - ESO/SIGN PUL

EMERGENCY SHUTOFF

V134
Emergency Shutoff decal, 2 1/2" H x 6" W

PROPANE-CONTAINER ELECTRICAL EMERGENCY SHUTOFF

P140 Emergency Electrical Shut-Off Metal Sign
P201 (Poly) V201 (Vinyl)

PROPANE - CONTAINER LIQUID VALVE EMERGENCY SHUTOFF

P135
(10" x 12" Sign)

REMOTE EMERGENCY SHUT OFF

RESS

EMERGENCY SHUTOFF VALVE
PULL TO CLOSE

V126
6" x 5" Decal

EMERGENCY SHUTOFF VALVE
PUSH TO CLOSE

V129
6" x 5" Decal

BULK PLANT/TRUCK DECALS & SIGNS

STOP
TANK CAR
CONNECTED

FTC1
(Sign) White letters on blue background

ALD4015-01
(sign holder)

BULK PLANT/TRUCK DECALS & SIGNS

NFPA-704-1
7" Storage Tank Diamond Hazard Decal

NFPA-704-3
15" Storage Tank Diamond Hazard Decal

NFPA-704-1P
Diamond Hazard Placard

Item #	Description
FDNS-2"	Decal w/ 2" letters
FDNS-4"	Decal w/ 4" letters
FDNS-6"	Decal w/ 6" letters
FNSI-4"	Metal sign w/ 4" letters
FNSI-6"	Metal sign w/ 6" letters
FPNS-2"	Poly sign w/2" letters
FPNS-4"	Poly sign w/ 4" letters

Item #	Description
FNSOFD-25'	12" x 18" Decal (25')
FNSOFD-50'	12" x 18" Decal (50')
FNSOFS-25'	12" x 18" Metal Sign (25')
FNSOFS-50'	12" x 18" Metal Sign (50')

Item #	Description
FDOT1-2"	Decal w/ 2" letters
FDOT1-4"	Decal w/ 4" letters
P17B	Poly sign w/ 4" letters

FLPGD
Decal w/ 2" letters, 3" x 24"

V85
Gas roll decal
6" x 1" (100 per roll)

V112
Propane roll decal
6" x 1" (100 per roll)

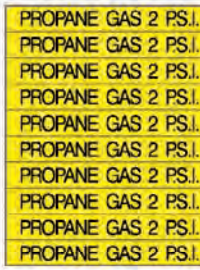

V62
4" x 5"

BULK PLANT/TRUCK DECALS & SIGNS (CONT)

Item #	Description
FDOT2	Decal w/ 2" letters
V28B	Decal w/ 4" letters
FDOT6	Decal w/ 6" letters
FDOT6-1	Metal Sign w/ 6" letters
P28C	Poly sign w/ 2" letters
P28B	Poly sign w/ 4" letters

MISCELLANEOUS DECALS

S500
3" x 4 1/2"
For bumpers of propane powered vehicles

V138
Fire extinguisher decal
4"x 18"

M138
Fire extinguisher sign (Aluminum)
4" x 18"

B97
3' x 10' Banner

MISCELLANEOUS DECALS

C86V

R.I.N. Single inspection decal

MISCELLANEOUS DECALS

V53
Flammable diamond decal

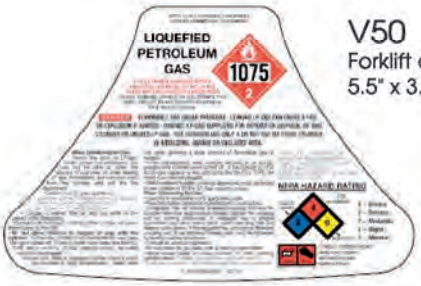

V50
Forklift cylinder decal
5.5" x 3.5"

V130
No authorized personnel decal
6" x 5"

V135
Emergency shuttoff decal
10" x 12"

C163V
R.I.N. Inspection Decal

ASME TANKS

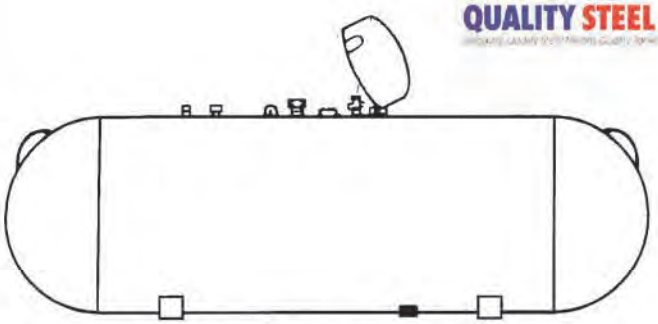

STANDARD TYPICAL DOMESTIC TANK SPECIFICATIONS

Capacity	Diameter	Length	Tank Weight
60 GAL (vertical)	24"	42"	188 lbs
120 GAL	24"	68"	257 lbs
120 GAL (vertical)	30"	54"	291 lbs
150 GAL	24"	84"	314 lbs
200 GAL	30"	79"	414 lbs
250 GAL	30"	94"	483 lbs
325 GAL	30"	119"	597 lbs
500 GAL	37"	119"	949 lbs
1000 GAL	41"	192"	1760 lbs
1450 GAL	47"	208"	2658 lbs
1990 GAL	46"	288"	3521 lbs

APPROXIMATE VAPORIZATION CAPACITIES OF PROPANE TANKS

BTU PER HOUR WITH 40% LIQUID IN TANK
DOMESTIC SYSTEMS

TANK SIZE WATER CAPACITY	PREVAILING AIR TEMPERATURE	
	20°F	60°F
120	235,008	417,792
150	290,304	516,096
200	341,280	606,720
250	406,080	721,920
325	514,100	937,900
500	634,032	1,127,168
850	943,904	1,715,355
1000	1,088,472	1,978,051
1450	1,485,961	2,427,447
1990	2,059,960	3,365,726

VAPOR PRESSURES OF PROPANE

TEMP.	PRESS.	TEMP.	PRESS.	TEMP.	PRESS.	TEMP.	PRESS.
130°F	257 psig	70°F	109 psig	20°F	40 psig	-20°F	10 psig
120°F	225 psig	65°F	100 psig	10°F	31 psig	-25°F	8 psig
110°F	197 psig	60°F	92 psig	0°F	23 psig	-30°F	5 psig
100°F	172 psig	50°F	77 psig	-5°F	20 psig	-35°F	3 psig
90°F	149 psig	40°F	63 psig	-10°F	16 psig	-40°F	1 psig
80°F	128 psig	30°F	51 psig	-15°F	13 psig	-44°F	0 psig

TANK ACCESSORIES & CYLINDERS

TANK ACCESSORIES

TC-1000

Tank Cradle

Sold Individually. Works for 120-1000 gallon tanks.

TS-1000

Tank Straps, 13" Wide x 14' OAL

Sold as a pair

590608

3/16 x 3 1/2" Cotter Pin Key for Tank Domes

CYLINDER TOOLS/ACCESSORIES

R20-3

R20-4

BOT-L-RENCH

Tools for removing and installing cylinder valves.

Item #	Description
R20-1	POL plug
R20-2	Wrench
R20-3	Wrench handle
R20-4	Chain vise assembly
R20-5	Plumbers pot wrench
R20-6	Combo Forklift valve wrench
R20-8	OPD valve wrench

R20-6

R20-2

R20-5

R20-1

R20-8

LIFT TRUCK / FLOOR BUFFER CYLINDERS

Size		Item #
20#	Vertical Aluminum Floor Buffer	M9285
20#	Vertical Steel Floor Buffer	M5455A
33 1/2#	Steel L.T. w/ fill valve	M5580A
33 1/2#	Aluminum L.T. w/ fill valve	M9315A
43 1/2#	Steel L.T. w/ fill val	M5595A
43 1/2#	Aluminum L.T. w/ fill valve	M9161

CYLINDERS

PORTABLE D.O.T. CYLINDERS

MANCHESTER STEEL VAPOR CYLINDERS

5# VERTICAL

10# VERTICAL

20# VERTICAL

40# VERTICAL

100# VERTICAL

420# VERTICAL

Lift Truck Cylinder

Size	Description	Item #
5#	Vertical w/ OPD	M10054
10#	Vertical w/ OPD (Tall)	M10228.4
11#	Vertical w/ OPD (Squat)	M10393.1
20#	Vertical w/ OPD	M10504
20#	Vertical w/ OPD & gauge	M10834TC.1
20#	Vertical w/OPD Quick Disconnect	M10502
20#	Horizontal w/ OPD w/ gauge	M10487TC
30#	Vertical w/ OPD	M1160.8
30#	Vertical w/ OPD w/ gauge	M1166.2
30#	Horizontal w/ OPD	M1164TC.1
30#	Horizontal w/ OPD w/ gauge	M1175TC
40#	Vertical w/ OPD	M1220.13
40#	Vertical w/ OPD w/ gauge	M1222TC.2
50#	Vertical w/ 10% POL & collar	M14990TC
60#	Vertical w/ 10% POL & collar	M1426
100#	Vertical w/ 10% POL & collar	M1428
100#	Vertical w/ multivalve & collar	M1436
200#	Vertical w/ multivalve & gauge	M14205.1
420#	Vertical w/ POL, outage, fill, relief, & gauge	M1499.1
28gal (100#)	Vertical ASME w/ multivalve & gauge	M681438L

DFG3010 Replacement gauge for Manchester M681438L

DFG3010-D Replacement dial for Manchester M681438L 100# A.S.M.E cylinder

ALUMINUM VAPOR CYLINDERS

Size	Description	Item #
10#	Vertical w/ OPD	M9058TC.2
20#	Vertical w/ OPD	M9060TC.1
20#	Vertical w/ OPD & gauge	M9060TC.4
33 1/2#	Vertical w/ OPD	M9151TC

20# cylinders and aluminum forklift cylinders come pre-purged from the factory.

*30#, 40#, 50#, 60#, 100# & steel forklift cylinders **DO NOT** come pre-purged.*

VERTICAL DISPENSER W/BASE & CRASH POSTS

Catalog No.	Product Data Description	Water Capacity Gal	Propane Capacity Lb	Diameter In	Overall Height In	Working Pressure	Tare Weight Lb
29014	660 GALLON ASME VERTICAL DISPENSER	660	528	42"	119"	250	1999
22014	1150 GALLON ASME VERTICAL DISPENSER	1150	920	48"	159"	250	3000
29011	1250 GALLON ASME VERTICAL DISPENSER	1250	1000	48"	169"	250	3290
29016	1600 GALLON ASME VERTICAL DISPENSER	1600	1280	48"	216"	250	4150
23354*	2000 GALLON ASME VERTICAL DISPENSER	1999	1600	54"	220"	250	6020
29005	660, 1150, 1250 & 1600 TANK BASES	N/A	N/A	N/A	10.5"	N/A	413
22774	660, 1150, 1250 & 1600 CRASH POST & RAILING	N/A	N/A	120"	35.5"	N/A	590

*Base, Crash Post & Railing is not available on this tank. Pumps and meters can be purchased at your local propane distributor.

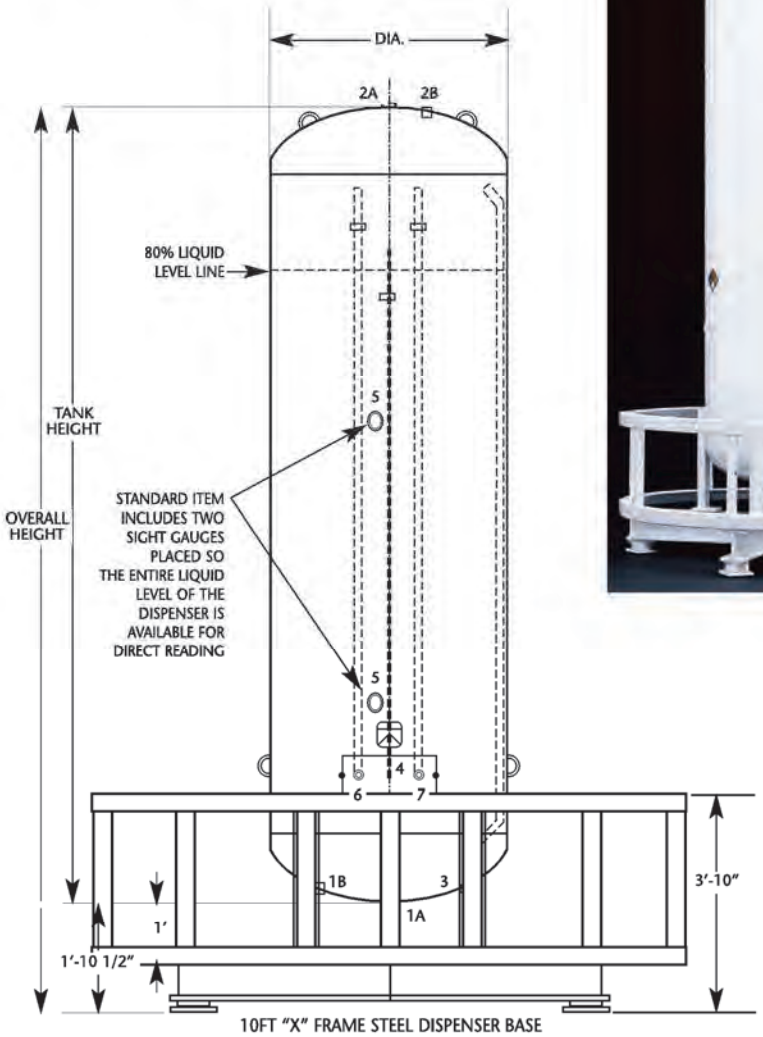

Motor Fuel ASME Tanks & Brackets

SINGLE TANKS

Part No.	Diameter (Inches)	Length (Inches)	MAWP (PSI)	Water Capacity (Gallons)	LP Capacity (Gallons)	Weight (Pounds)
22987	12	50	312	22.6	18.08	70
225547	12	72	312	33	26.4	105
217447	13	55	312	29.3	23.44	108
2380417	16	34	312	26.2	20.96	98
23467	16	42	312	32.9	26.32	106
20067	16	52	312	41.4	33.12	152
20087	16	62	312	49.8	39.84	146
212347	18	80	312	81.8	65.44	234
23127	20	48	312	58.4	46.72	177
24457	20	48	312	58.4	46.72	196
23567	20	60	312	74.2	59.36	217
26087	20	60	312	74.2	59.36	231
200247	20	60	312	74.2	59.36	225
20597	24	62	312	109.3	87.44	322
23657	24	62	312	109.3	87.44	370

MANIFOLD TANKS

Part No.	Diameter (Inches)	Length (Inches)	MAWP (PSI)	Water Capacity (Gallons)	LP Capacity (Gallons)	Weight (Pounds)
270155	10 & 12	30	312	22.4	17.92	113
270162	10 & 13	30 & 30	312	24.6	19.68	135
270159	10 & 13	35 & 35	312	27.9	22.32	140
270160	10 & 14	30	312	26.9	21.52	116
270161	11 & 11	40 & 40	312	30.2	24.16	130
270158	13 & 13	32	312	32.8	26.24	133
270157	13, 13 & 11	34, 37 & 36	312	50.25	40.2	230

BRACKETS

Part No.	Diameter (Inches)	Weight (Pounds)	Description
23964	10	24	Standard - Gray
23964.1	10	24	Standard - White
23504	12	25	Standard - Gray
23504.1	12	25	Standard - White
2636	14	28	Heavy Duty - Gray
2636.1	14	28	Heavy Duty - White
2518	16	39	Standard - Gray
2518.1	16	39	Standard - White
25181	16	60	Heavy Duty - Gray
2506	18	38	Standard - Gray
2506.1	18	38	Standard - White
25291	18	62	Heavy Duty - Gray
25291.1	18	62	Heavy Duty - White
2507	20	40	Standard - Gray
2507.1	20	40	Standard - White
2509	24	46	Standard - Gray
2509.1	24	46	Standard - White
25071	20	63	Heavy Duty - Gray
25071.1	20	63	Heavy Duty - White
25091	24	64	Heavy Duty - Gray
25091.1	24	64	Heavy Duty - White

MANCHESTER TANK
SINCE 1946

PROPANE MOWER CYLINDERS

Part No.	Product Data Description	Water Capacity gal	Length in	Height in	Diameter in	Tare Weight lbs
5456TC.3	20# TC/DOT Mower Cylinder - Steel	4.76	13.6	19.0	12	27
9367	33.5# Mower Cylinder - Aluminum	8.0	22.4	28.3	12	25
9368	43.5# Mower Cylinder - Aluminum	10.4	28.8	34.4	12	26
	Description	kg	mm	mm	mm	kg
5456TC.3	20# TC/DOT Mower Cylinder - Steel	21.6	345.4	482.6	304.8	12.3
9367	33.5# Mower Cylinder - Aluminum	36.3	569	718.8	304.8	11.3
9368	43.5# Mower Cylinder - Aluminum	47.2	731.5	873.8	304.8	11.8

Other accessories available on request.

CYLINDER TOOLS & ACCESSORIES

CYLINDER TOOLS/ACCESSORIES (CONTINUED)

CV
CYLINDER VISE
Economical vise designed to secure cylinders up to 100# capacity for easy valve removal. Use a socket wrench to tighten and loosen the strap.

CP9361-1
AIR SCRIBE KIT
Air operated tool for marking DOT cylinders after required inspection. Writes quickly and easily on steel.

CP054177
Replacement Stylus for Air Scribe.

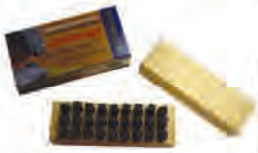

CYLINDER MARKING DIES

Item #	Description
HL4980-14	1/4" Letter Set
HL4980-04	1/4" Number Set
HL4980-E	1/4" Letter "E" only

RCA CYLINDER STAMPING ANVIL
Holds 1/4" die in place and provides backing behind collar to prevent collar bending.

REPK PURGING KIT
Safe, reliable method for purging LPG cylinders.

ME350MV
CYLINDER GUARD RING
w/ Cut-out

S100SCAP
CYLINDER CAP

TU476A PIT GAUGE
Accurately measure pitted areas of rusted cylinders in the requalification process. Unit comes with a leather case.

CYLINDER TOOLS/ACCESSORIES (CONTINUED)

M1803
DUAL CYLINDER RACK
Designed to secure two 30# cylinders.

FORKLIFT CYLINDER BRACKETS

Item #	Description
TB-2	For horizontal cylinders
TB-3	For vertical cylinders

PORTABLE BEAM SCALES FOR CYLINDER FILLING

854F100P CARDINAL PLATFORM SCALE
Heavy duty, cast iron beam scale designed for rugged service.
Platform size: 18" x 27" Capacity: 1000#

F1124 FAIRBANKS PLATFORM SCALE
Heavy duty, cast iron beam scale designed for rugged service.
Platform size: 18" x 27"
Capacity: 1000#

CYLINDER/TANK DOLLIES

CYLINDER TRUCKS

Item #	Cylinder Size
T7325-S	100#
T7-900-4P	420#

T101222 - Cylinder Truck Replacement Wheels

YANKUPRIGHT
For moving only DOT and ASME upright tanks. Folds for easy storage.

YANKATANK
For ASME tanks up to 330, and upright DOT tanks. Rear axles can be removed and bolted to tank legs for rolling lengthwise through obstacles.

RTC420M2
MANUAL TANK DOLLY
Will move full 420# cylinders.

RTC420NG3
MUSCLE MAN TANK DOLLY
Two-wheel gear drive w/ forward and reverse speeds. Includes strapping system.

ASME TANK & 420# CYLINDER ANCHORING SYSTEM

MINUTE-MAN EZ ONE STEP ANCHORING SYSTEM

Securely anchors tanks and cylinders in flood prone areas. Deluxe anchors have compacting disks and stabilizing heads.

Item #	Description
MMA-1346	36" Economy Anchor
MME-Z1546	48" Tank Anchor
MM2375	Stainless Steel Strapping (100')
MM2365	Coated 2 Strap Sling
MM2382	Plastic Sheathing
MM2010	Bolts/Nuts

Item #	Description
MMA-2741	Adapter
MM2730	Anchor drive machine

CYLINDER STORAGE CABINETS

RR1564 LIFT TRUCK CYLINDER RACK

Rack holds four 33# lift truck cylinders. Bar locks for security. Multiple racks can be bolted together.

33# MOTOR FUEL CYLINDER STORAGE CABINETS

M Series Features:

- 3 safety decals
- Tapered shelf front
- Heavy duty welded hinge
- Lockable latch
- Meets all safety requirements
- Assembled and ready to use

M-8A Aluminum option pictured

Item #	Holds	Dimensions
M4	4 cylinders	30" W x 40" H
M6	6 cylinders	30" W x 55" H
M8	8 cylinders	30" W x 70" H
M12	12 cylinders	43" W x 70" H
M16	16 cylinders	60" W x 70" H
M24	24 cylinders	85" W x 70" H

Available in Aluminum or Powder Coated Steel.

For Aluminum option, add "A" to the end of the part#.

Cabinets come standard Powder Coated Safety Yellow. They are also available in Red, White, Gray & Ford Blue.

CYLINDER STORAGE CABINETS (CONTINUED)

20# CYLINDER STORAGE CABINETS

X Series Features:

- locations for up to 3 safety placards
- Heavy duty welded hinge
- 24 and 36 cylinder cabinets have double doors
- Can be fastened to floor
- Your choice of color with acrylic paint

Item #	Holds	Dimensions
X8	8 cylinders	27" D x 30" W x 50" H
X12	12 cylinders	27" D x 43" W x 50" H
X16	16 cylinders	27" D x 60" W x 50" H
X18	18 cylinders	27" D x 43" W x 72" H
X24	24 cylinders	27" D x 60" W x 72" H
X24L (low profile)	24 cylinders	27" D x 85" W x 50" H
X36	36 cylinders	34" D x 60" W x 72" H

For Aluminum option, add "A" to the end of the part#.

Cabinets come standard Powder Coated Safety Yellow. They are also available in Red, White, Gray & Ford Blue.

1# REFILLABLE CYLINDERS

A94856L

130000 130003

Contains the following features:

- Complies with DOT specifications for a refillable cylinder
- Proprietary valve design with positive on-off valve, relief & fixed maximum liquid level gauge
- 2 sizes for multiple applications
- Empty cylinder filling time is 50-70 seconds using drift method
- UL listed filling adapters and drifting dispensers available
- Safety fill valve prevents disposable container connection and refilling
- Recycled powder paint for maximum rust protection

ENVIRONMENTAL BENEFITS

- Refillable ... it costs more to recycle a cylinder than to build one
- Eliminates millions of pounds of waste per year
- Propane is listed as an approved, clean fuel alternative under the 1990 Clean Air Act and the Energy Policy Act of 1992 Propane reduces greenhouse gas emissions
- Propane is a non-toxic and non-poisonous fuel, so it's not harmful to soil or water

Rutherford
EQUIPMENT • QUALITY GAS PRODUCTS

PROPANE DISPENSERS

DISP151MNC
One Hose Unit

✓Cylinder Filling

✓Low & High Volume Motor Fuel/RV

✓Gasoline Style Autogas

• Dispenser packages now come standard with the following signage included: 2) each of 2" NO SMOKING, 4" NO SMOKING, 2" PROPANE, 4" PROPANE, 4" FLAMMABLE GAS, and 1) each of Cylinder Filling Procedures and 7-4-0 7" decal

DISP151M2NC
Two Hose Unit

Our dispensers are completely assembled and pressure tested. An explosion proof switch and decals are included. On dispensers with ACME filler couplings, a POL filler coupling with adapter is included to fill cylinders. On dispensers with POL filler couplings, an adapter is included to be able to fill through 1 3/4" ACME fill valves. A breakaway coupling is installed on the motor fuel/RV and autogas units. A breakaway coupling reset tool is included. Standard hose assemblies are 1/2" and 3/4" hose in lengths of 15' and 18'. Hoses can be made to your specifications.

If a cabinet is required, we offer a square and angle cabinet. Both are available either powder coated white or in diamond plate aluminum. The angle cabinet will accommodate a 1000# platform scale.

H48C
Steel

SQUARE CABINETS
34" W X 26" D X 45 1/2" H

H48C-DP
Diamond Plate Aluminum

H50AC
Steel

ANGLE CABINETS
45" W X 43" D X 49 1/2" H

H50AC-DP
Diamond Plate Aluminum

Georgia: 800-241-5652 • Florida: 800-432-1869 • North Carolina: 800-426-9293

Complete dispenser in square cabinet

Complete dispenser in angle cabinet

OPTIONS

Pump Options:

Blackmer Model #	Size	GPM*	Motor Size
LGFIE	1"	6	1 HP
LGFIPE	1"	10	1 1/2 HP
LGRLFI-1/4	1 1/4"	14	2 HP
LGL156A	1 1/4" X 1"**	22	5 HP

**Pump ratings are based on 100# differential pressure.*
***With reducing flanges installed*

Meter Register Options:

90028-101

1" meter with a non-printing Veeder-Root mechanical register (Standard)

RL100508AM8

1" meter with E:Count electronic register

RL100508A60P

1" meter with non-printing Itron E1000 electronic register

SKID-MOUNT

We now offer any of our dispensers skid-mounted to a 1000 gallon tank. All piping is installed and pressure tested.

Dispenser Accessories:

DPK
Cylinder Purging System (Installed)

LF1-C
1 1/4" Connecting Kit with Internal Valve & Cable Control

H16S
Set of 16" Tank Stands

F1124
1000# Fairbanks Single Beam Scale

TGP-20D
20# ABC Class Fire Extinguisher

Dispenser Accessories:

DISP-GK
Gauge kit that is pre-installed on dispenser packages. We install liquid filled gauges at the pump inlet, between the pump and meter and at the outlet of the meter.

DISP-SPK
Kit includes 3 aluminum plates to rivet to a diamond plate dispenser cabinet for installing decals. Contains 2) 8" x 8" plates and 1) 10" x 14" plate.

DTG
This differential pressure gauge assembly is installed between a hose end valve and filler valve. It includes a valve that can be utilized by slowly closing it to increase differential pressure. The included pressure gauge shows the current pressure and aids in setting of the bypass valve.

DSK-V
Dispenser signage kit, w/ vinyl decals.

DSK-P
Dispenser signage kit, w/ poly signs. DSK sign kits contain 2 each of 2" NO SMOKING, 4" NO SMOKING, 2" PROPANE, 4" PROPANE, 4" FLAMMABLE GAS, & 1 each of CYLINDER/MOTOR FUEL INSTRUCTION decal and 7.5" x 7.5" diamond hazard decal.

Dispenser Part Numbers

DISPENSER MODEL	GPM*	HP	METER	CABINET	2ND HOSE
DISP101NC	6	1	No	None	No
DISP101SC	6	1	No	Steel Square	No
DISP101AC	6	1	No	Steel Angle	No
DISP101DP	6	1	No	Aluminum Square	No
DISP101DPA	6	1	No	Aluminum Angle	No
DISP101MNC	6	1	Yes	None	No
DISP101MSC	6	1	Yes	Steel Square	No
DISP101MAC	6	1	Yes	Steel Angle	No
DISP101MDP	6	1	Yes	Aluminum Square	No
DISP101MDPA	6	1	Yes	Aluminum Angle	No
DISP151NC	10	1.5	No	None	No
DISP151SC	10	1.5	No	Steel Square	No
DISP151AC	10	1.5	No	Steel Angle	No
DISP151DP	10	1.5	No	Aluminum Square	No
DISP151DPA	10	1.5	No	Aluminum Angle	No
DISP151MNC	10	1.5	Yes	None	No
DISP151MSC	10	1.5	Yes	Steel Square	No
DISP151MAC	10	1.5	Yes	Steel Angle	No
DISP151MDP	10	1.5	Yes	Aluminum Square	No
DISP151MDPA	10	1.5	Yes	Aluminum Angle	No
DISP151M2NC	10	1.5	Yes	None	No
DISP151M2SC	10	1.5	Yes	Steel Square	Yes
DISP151M2AC	10	1.5	Yes	Steel Angle	Yes
DISP151M2DP	10	1.5	Yes	Aluminum Square	Yes
DISP151M2DPA	10	1.5	Yes	Aluminum Angle	Yes
DISPRFNC	14	1.5	No	None	Yes
DISPRFSC	14	1.5	No	Steel Square	No
DISPRFAC	14	1.5	No	Steel Angle	No
DISPRFDP	14	1.5	No	Aluminum Square	No
DISPRFDPA	14	1.5	No	Aluminum Angle	No
DISPRFMNC	14	1.5	Yes	None	No
DISPRFMSC	14	1.5	Yes	Steel Square	No
DISPRFMAC	14	1.5	Yes	Steel Angle	No
DISPRFMDP	14	1.5	Yes	Aluminum Square	No
DISPRFMDPA	14	1.5	Yes	Aluminum Angle	No
DISP156MAC**	22	5	Yes	Steel Angle	No
DISP156MDPA**	22	5	Yes	Aluminum Angle	No

** Pump ratings based on 100# differential pressure.*
*** The GGIE gasoline style nozzle is an option.*

Non-Metered Dispensers do NOT include a breakaway assembly. Breakaways can be ordered as an optional addition to be installed in the system.

POL/QCC Filler Coupling Options:

ME390 1/4" MNPT X MPOL

ME516 QCC X 1/4" MNPT

ME796 QCC X 1/4" MNPT - Quick Connect

ACME Filler Coupling Options:

ME110
1 3/4" X 1/2" Short Coupling

ME111
1 3/4" X 3/4" Short Coupling

ME635-6
1 3/4" ACME x 3/4" Long Coupling

Lift Truck Filler Coupling Options:

ME790
1 1/4" Female ACME x 1/4" MNPT

ME795
1 1/4" Female ACME x 1/4" MNPT - Quick Connect

Adapter Options:

ME210 - 1 3/4" Male ACME x 1/4" MNPT Adapt a 1 3/4" ACME filler coupling to use a POL, QCC, or lift truck filler coupling.

ME568 - 1 3/4" Female ACME x FPOL Adapt a POL filler coupling to fill through 1 3/4" filler valves

ME308 - Female CGA 555 x FPOL Adapt a POL filler coupling to fill through a cylinder valve with a CGA 555 liquid connection

EF276329
FPOL x Plug Nipple
Adapt a POL filler coupling to fill through a type 2 quick disconnect cylinder valve

Parafour's "P-4 Series" Motor Fuel Dispensers offer the next generation in advanced LPG refueling systems. From electronic upgrades to existing "cabinet" style dispensers, to dual purpose cylinder and Autogas dispensers, through full retail "Pay at the Pump" with the PARA-FUEL management system. The P-4 series feature an extremely rich and capable dispenser. These units are built to exacting standards and designed around ALL applicable codes and regulations (NFPA 58, NEC, UL-495, & NCWM). There are multiple models to choose from to fit your individual needs.

- Gasoline style dispensers
- Recommended for use with Blackmer's LGL156A High Differential pump (not included)
- GG20 gasoline style nozzle
- Automatic Temperature Compensation
- Advanced electronic "no seal" calibration
- Enhanced accuracy with Quadrature Pulser
- Compatible with Tripod pullaway protection valves
- 5 preset pricing levels
- Leak / theft protection
- Integrated fuel management system interface
- Communicates with most existing fuel management systems
- Integrated Gilbarco 2-wire communication protocaol
- Fully upgradable to receipt printer and ParaFUEL Fuel Management
- Large display with easy to read backlit LCD display, show total sale, price and gallons
- 16 key alpha-numeric pad with 5 level secure access programming
- ParaFUEL Fuel Management Suite includes:
  - Integrated RFID card reader
  - Site controller PC
  - RFID Card programmer, 25 initial cards (more cards are available)
  - Currently good for single unit control with a networ ked system coming soon

P4-100H

P4-150H

P4-200H

P4-ECO-AIR

P4-PRINTER

Part #	Description
P4-100H	Parafour single hose dispenser
P4-150H	Parafour dual hose dispenser
P4-200H	Parafour dual hose dispenser
P4-ECO-AIR	Internal valve actuator system
P4-PRINTER	Printer for P4 dispenser

Parafour Innovations, LLC

Available options include: meter of choice (Liqua-Tech, Neptune, Liquid Controls MA4, or Tuthill TSO6AS), 2" roll thermal receipt printer, Integrated Fleet Fuel Management with RFID Key-FOB, PARA-FUEL fleet/Retail "Pay at the Pump" System, integrated 12 GPM pump for multipurpose LPG resellers, multiple language options (English, Spanish, Russian and others),

GF-1/2" & 3/4" PROPANE GRAVITY FILLING KITS

1	ME390	6" M. soft nose POL filler coupling
2	B06X02	3/4" x 1/4" schedule 80 reducing bushing
3	ME821-6	3/4" Globe, quick acting hose end valve w/ 1/4" port
4	MEJ400	1/4" liquid level vent valve
5	GC06X10'	3/4" liquid transfer 10' hose assembly, MxM
6	ME449	3/4" liquid transfer valve with excess flow valve
7	MEH225	1/4" hydrostatic relief valve
8	*ME453	liquid withdrawal adaptor
9	*ME458	liquid withdrawal adaptor (New Style)

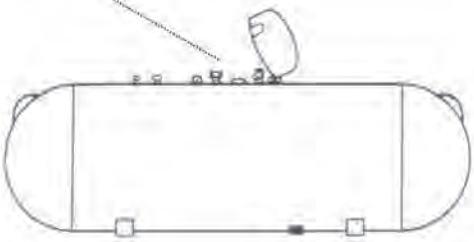

** For your convenience we have included both the "old" and "new style" liquid withdrawal adaptors*

OPTIONS:

To fill forklift bottles through the 1 1/4" M.ACME safety coupling, order the following items along with your GF-1/2 or GF-3/4 kit:

ME220F 1 1/4" F.ACME x 1/4" FNPT lift truck connector

ME284 F. POL x 1/4" MNPT Adaptor

OR

To fill through a standard 1 3/4" filler valve, order the following items with your GF-1/2 or GF-3/4 kit:

ME450 1 3/4"F.ACME x 3/4"FNPT unloading adaptor

ME287 F. POL x 3/4" MNPT Adaptor

PUMPING SYSTEMS

The following kits are primarily designed to be used with a small capacity pump like Blackmer's LGF1C (10 GPM) or LGF1PC (15 GPM)

For a pumping system to perform properly, you must have high quality equipment installed in accordance with the manufacturer's recommendations and the following good installation practices:

1. The tank should be installed with as much vertical distance from the bottom tank outlet to the pump inlet as practical. The minimum recommended distance from the bottom of the tank to the ground is 16" for good pump performance.

2. Only bottom tank outlets should be used to supply gas to liquid pumps, and the size of these outlets should be no less than the inlet of the pump. There should be no restrictive fittings on the inlet side of the pump.

3. The pump should be located as close to the tank outlet as practical. A LP gas pump can push gas for reasonable distances, but cannot suck gas. Liquid gas must be fed to the pump by gravity.

4. All positive displacement pumps require a bypass line to return gas back to the tank. The Blackmer LGF1E and LGF1PE pumps have built in bypass valves. A line must be run between the pump and the tank to protect the pump against excessive differential pressure.

5. Proper electrical wiring connections and correct wire size are important for good pump performance. Be sure the motor terminals are connected correctly for the voltage and rotation being used. Listed below are general recommendations for the minimal wire size for more common wiring runs on 1 HP and 1 1/2 HP single phase motors. Please comply with the motor manufacturer's requirements concerning this matter.

MOTOR WIRE SIZING

Length of Run	Voltage	Wire Size
Motor Size: 1 HP Single Phase		
100'	115	#8
100'	230	#10
200'	115	#6
200'	230	#8
Motor Size: 1 1/2 HP Single Phase		
100'	115	#4
100'	230	#10
200'	115	#0
200'	230	#8

CONNECTING KITS

LF1-B DELUXE PUMP KIT

Deluxe kit includes Fisher's 1 1/4" internal valve. All piping components are 1 1/4". Designed for free standing pump installations.

See appendix for material lists & schematics of these kits.

LF1-C DISPENSER CONNECTING KIT

LF1-AG AUTOGAS DISPENSER CONNECTING KIT

Includes the new MEC fill valve with auxiliary inlet, allowing the bypass line to be run to a higher flow inlet.

DISP-GK DISPENSER GAUGE KIT

This option will equip a dispenser with the gauges necessary to troubleshoot problems in system operation. It can either be ordered with a dispenser, or after the fact for retrofitting onto the dispenser.

BULK PLANT BULKHEADS

ITEM#	COUPLINGS
STH16X10	2" and 1 1/4"
STH16X16	Two 2"
STH16X16X10	Two 2", One 1 1/4"
STH24X16	3" and 2"
STH24X16X10	3", 2", and 1 1/4"
STH24X16X16	3" and Two 2"

BLACKMER PUMPS

LGF DRIVE STYLE

FLANGE MOUNTING - DIRECT MOTOR DRIVE

These small positive displacement pumps are ideal for filling cylinders and motor fuel tanks. They mount directly to a C-face motor & have built in "back to the tank" bypass valves.

PUMP ONLY

Item #	Size	Capacity
LGF1E	1"	10 GPM
LGF1PE	1"	15 GPM
LGRLF1-1 1/4	1 1/4"	18 GPM

LGF1 SERIES

w/ 115/230V Motor

Item # *	Size	HP	Capacity
LGF1E-101	1"	1	10 GPM
LGF1PE-151	1"	1 1/2	15 GPM
LGRLF-201	1 1/4"	2	18 GPM

DM DRIVE STYLE

BRACKET MOUNTING - DIRECT MOTOR DRIVE

These durable motor speed pumps offer capacities up to 35 GPM and are ideal for motor fueling, multiple station cylinder filling and a variety or small transfer jobs. They are designed for foot mounting to a common base plate.

PUMP ONLY

Item #	Size	Capacity
LGL1-1/4	1 1/4"	20 GPM
LGL1-1/2	1 1/2"	30 GPM

PUMP ASSEMBLY

Pump, coupling and coupling guard, mounted on a common base, ready to accept a standard NEMA motor.

Item #	Size	Capacity
LGL1-1/4DM	1 1/4"	20 GPM
LGL1-1/2DM	1 1/2"	30 GPM

BLACKMER PUMPS (CONTINUED)

VB DRIVE STYLE

BASE MOUNTED - V-BELT DRIVE PUMP ONLY

Capacity is at 640 RPM and 50 psi differential pressure.

Item #	Size	Capacity
LGLD2E	2"	67 GPM
LGLD3F	3"	133 GPM
LGLD4	4" inlet 3" outlet	270 GPM

PUMP ASSEMBLY

Pump, hubs, sheaves, high-torque triple V-belts and belt guard mounted on a common base, ready to accept a standard NEMA motor. Capacity at 640 RPM and 50 psi differential pressure.

Item #	Size	Capacity
LGLD2E-VB	2"	67 GPM
LGLD3F-VB	3"	133 GPM
LGLD4-VB	4" inlet 3" outlet	270 GPM

If purchasing a VB unit without a motor, please specify which motor will be used in the assembly. The actual motor model number is best if at all possible as our units are configured for use with EPFC (Explosion Proof Fan Cooled) rated motors. Frame size dimensions vary between motor ratings and this ensures the correct assembly is provided.

FLANGE MOUNTED PUMPS FOR BOBTAILS & TRANSPORTS

Capacity is at 870 RPM and 50 psi differential pressure.

Item #	Inlet	Aux. Inlet	Outlet	Capacity
TLGLF3C*	3" flange	2" FNPT	2" FNPT	100 GPM
TLGLF4B	4" flange	3" FNPT	Dual 2" FNPT	379 GPM

HydraFLOW

Hydraulic Drive System

Hydraulic systems eliminate the need for drive lines, jackshafts and U-Joints, which require frequent maintenance and are a potential safety hazard. The HydraFLOW hydraulic cooler is designed to hydrolically drive all 3" & 4" propane/anhydrous ammonia pumps and comes with unique features that are an industry-first: Internal breather prevents water from entering the tank; top filter access allows for easy change out; downward facing fan results in quieter operation. The scope of supply for a typical system includes all equipment required for off-loading including the PTO, hydraulic pump, hydraulic motor, HydraFLOW hydraulic cooler and hydraulic fittings.

BLACKMER PUMPS (CONTINUED)

LGL156 & LGL158 Continuous Duty, High Pressure LPG and NH3 Pumps

- Single and dual hose fuel dispensers
- Aerosol filling
- Vaporizer feed
- Underground tank applications
- Aboveground tank applications
- Other high differential pressure liquefied gas applications
- UL listed for use on propane, butane, butane/propane mixes and anhydrous ammonia

Pump Specifications

Pump Model	Maximum Speed	GPM (L/min)	HP (kW)	Maximum Differential Pressure	Recommended Bypass Valve Setting	Relief Valve Setting	Maximum Working Pressure
LGL154C	1,750	11.2 (42.4)	3 (2.2)	140 PSI (9.6 bar)	140 PSI (9.6 bar)	225 PSI (15.5 bar)	425 PSI (29.3 bar)
LGL156C	1,750	21 (79.5)	4.9 (3.6)	160 PSI (11.0 bar)	160 PSI (11.0 bar)	225 PSI (15.5 bar)	425 PSI (29.3 bar)
LGL158C	1,750	32.3 (122)	5.2 (4)	200 PSI (13.8 bar)	200 PSI (13.8 bar)	225 PSI (15.5 bar)	425 PSI (29.3 bar)

LGLH2

LGLH2 High Pressure LPG Pump

Based on Blackmer's industry standard LGLD2 transfer pump, the LGLH2 has the muscle to handle the toughest jobs. Whether pumping from a bobtail to the top of an 8-story building or feeding a vaporizer in the middle of winter – the LGLH2 can do it.

Performance at 150 psid (10.3 bar) differential pressure			Maximum Differential Pressure	Relief Valve setting	Maximum Working Pressure
1750 rpm	1450 rpm	1150 rpm			
32.3 gpm / 5.2 HP	24 gpm / 4.3 HP	17.8 gpm / 3.4 HP	200 psi	220 psi	425 psi

LGL3021A

LGL3021A Multi-Purpose LPG Transfer Pump

Based on Blackmer's industry standard LGLD3 transfer pump, the LGL3021 replaces competitive pumps without changing piping connections or motor drives. Whether filling an LPG bobtail or transport – the LGL3021 can do it faster and more efficiently than competitive models.

3021 Performance

Maximum Speed	GPM	HP	Maximum Differential Pressure	Recommended Bypass Valve Setting	Relief Valve Setting	Maximum Working Pressure
800 rpm	112	12.1	150 psig	125 psig	150 psi	350 psi

- Designed for high differential pressure of 150 psi (10.34 bar)
- Sliding vane, positive displacement design for consistent performance
- Designed to bolt in place of competitive pumps without changing piping or motor drives
- Same performance and internal parts as LGLD3 pumps
- Cavitation suppression liner
- Replaceable liner and discs
- Ductile iron construction
- Factory ISO-9001 certified

Available Flanges

Model	Size
LGL3021	3" NPT Flange, Nodular
	4" NPT Flange, Nodular

BLACKMER PUMPS (CONTINUED)

Regenerative Turbine Pump for LPG Applications

Ebsray RC20 & RC25

The Ebsray RC Series Regenerative Turbine Pumps are designed and precision-built for high-pressure transfer of LPG, autogas, propane, and butane.

Applications

- LPG Autogas dispensers, single or two hoses (RC25)
- Industrial dispensing
- Autogas refueling
- Marine dispensing
- Portable tanks
- Cylinder filling
- Forklift refueling
- Direct burner or vaporizer feed

Porting:
Inlet: NPT 1" 90° and/or 180°
Discharge: NPT 1" 90° and/or 180°

Maximum Operating Limits

Pump Model	Flow Rate (at 3,500 rpm)		Differential Pressure (at 3,500 rpm)		Hydrostatic Test Pressure		Power		Pump Speed	Weight	
	gpm	L/min	psi	bar	psi	bar	HP	kW	rpm	lbs	kg
RC20	15.9	60	200	14	1,015	70	3.2	2.4	3,500	43	19.5
RC25	27.7	150	200	14	1,015	70	4.8	3.6	3,500	43	19.5

Performance

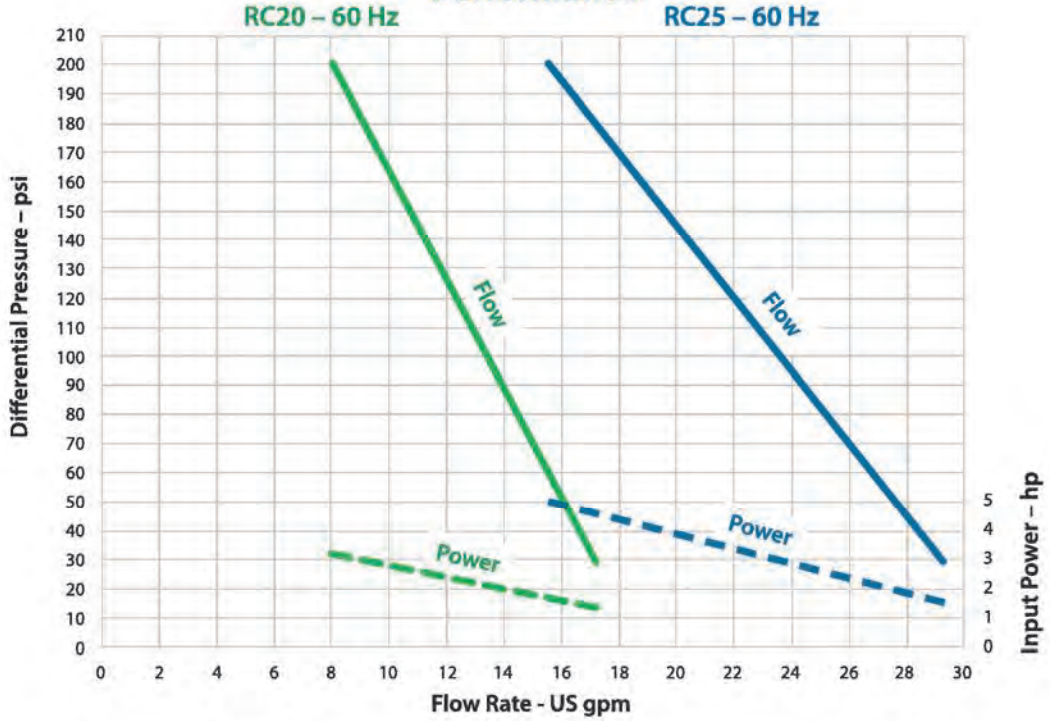

Motor not included. Motors are special ordered based on application requirements. Please contact Rutherford Equipment for more detailed information.

BLACKMER PUMPS (CONTINUED)

Model RC40 with Bypass Valve

Regenerative Turbine Pump for LPG Applications

Ebsray RC40

The Ebsray RC Series Regenerative Turbine Pumps are single-stage regenerative turbine pumps designed for handling LPG and other gaseous liquids. The RC40 is suitable for the transfer of a wide variety of liquefied gases, including LPG, Autogas, DME, Aerosols, CO_2, Industrial refrigerants and Anhydrous ammonia.

Applications

- Transfer and industrial dispensing
- Cylinder filling
- Fleet refueling
- Forklift refueling
- Direct burner and vaporizer feed
- Above ground and underground tanks

Operating Limits

Pump Model	Maximum Differential Pressure		Maximum Working Pressure		Hydrostatic Test Pressure		Minimum Temperature		Maximum Speed
	psi	bar	psi	bar	psi	bar	°F	°C	rpm
RC40	203	14	400	27.6	1015	70	-20.2	-29	3800

Porting:

Inlet: 1-1/2" NPT, Flanged to suit 1-1/2" ANSI Class 300 and DN40 DIN PN40

Outlet: 1" NPT, Flanged to suit 1" ANSI Class 300 and DN25 DIN PN40

Gauge: 1/4" NPT

Performance

60Hz – 3500 RPM

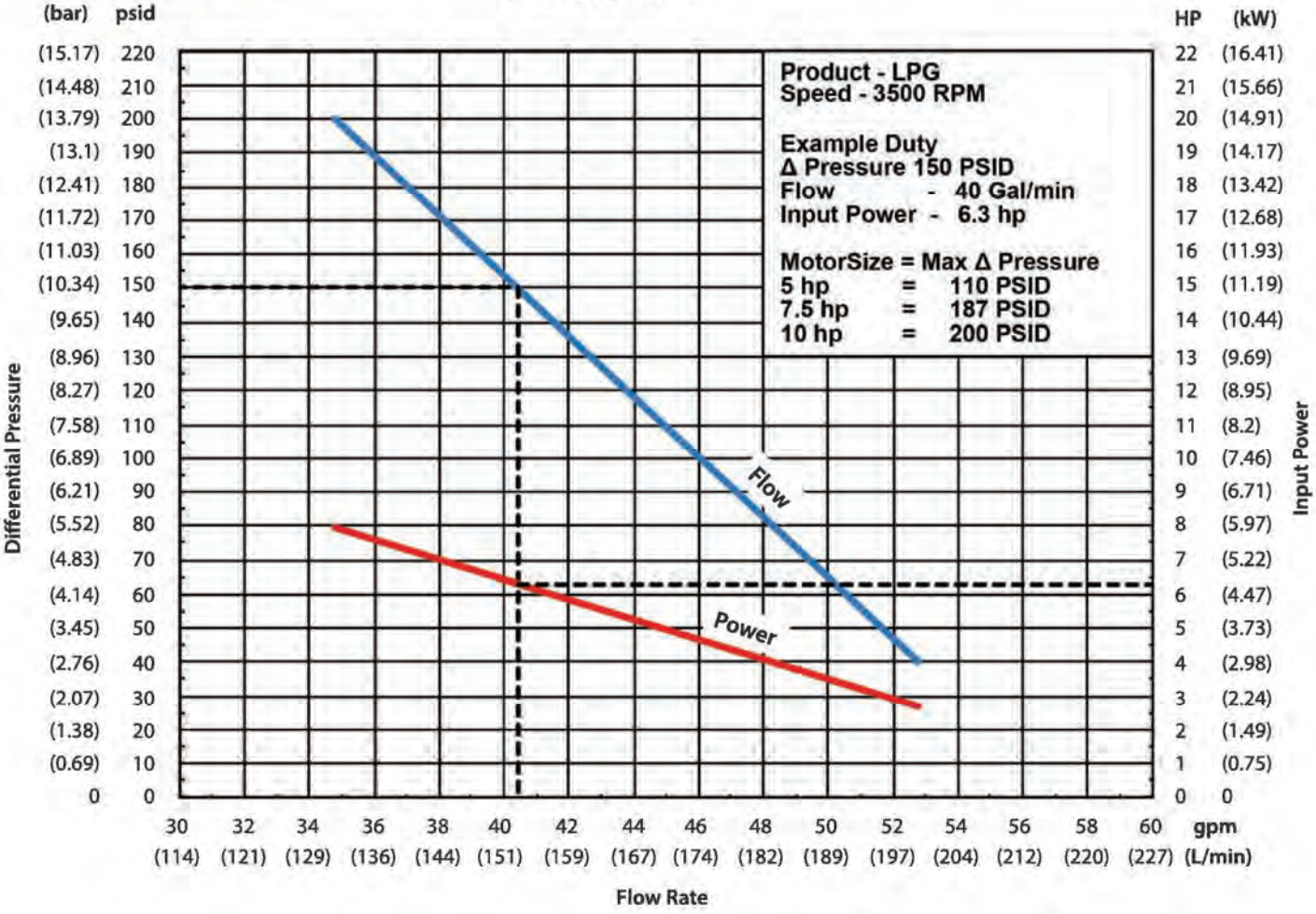

Performance Curves

These curves are based on approximate delivery rates when handling propane or anhydrous ammonia at 80°F (26.7°C). Line restrictions such as excess flow valves, elbows, etc. will adversely affect deliveries. For propane at 32°F (0°C), actual delivery will be further reduced to about 80% of nominal. Delivery of butane at 80°F (26.7°C) will be 60% to 70% of these values, and may run as low as 35% to 45% at 32°F (0°C). This loss of delivery is not a pump characteristic but is caused by natural thermodynamic phenomena of liquefied gases.

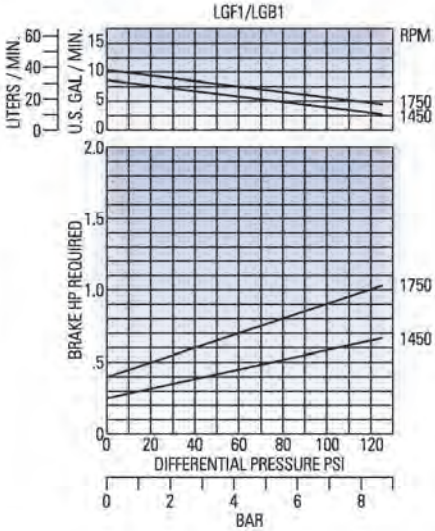

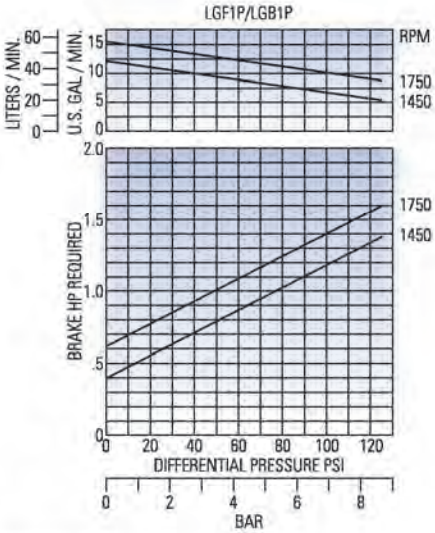

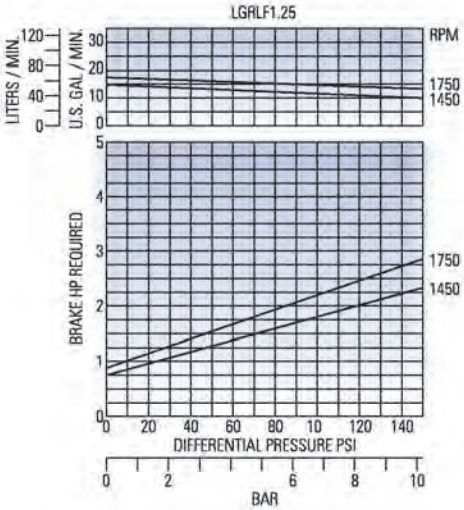

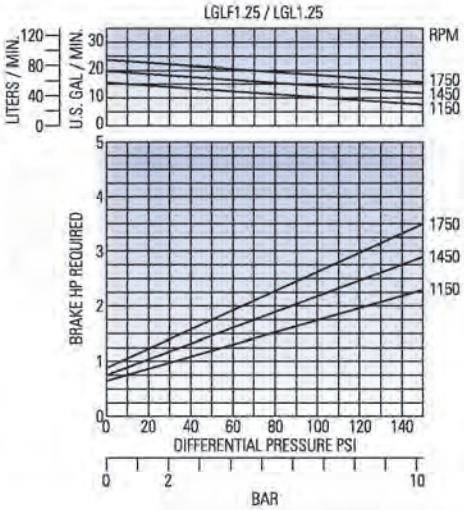

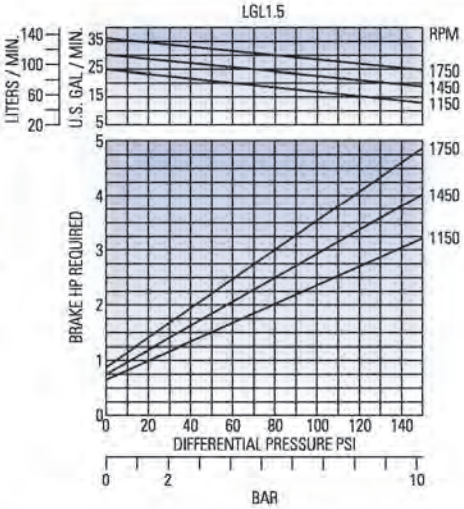

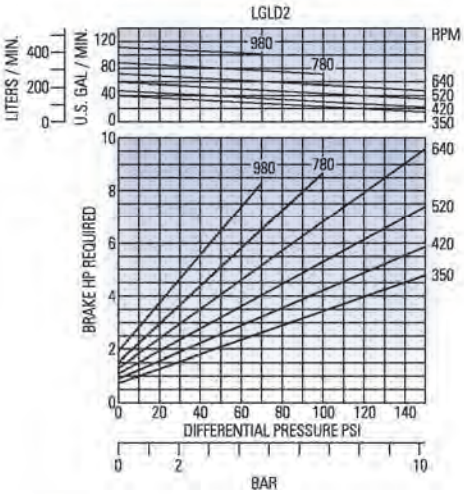

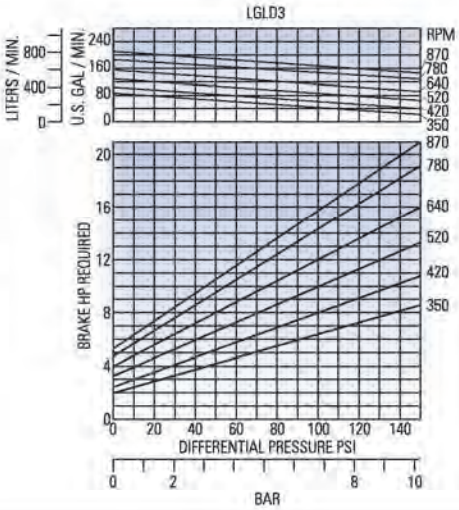

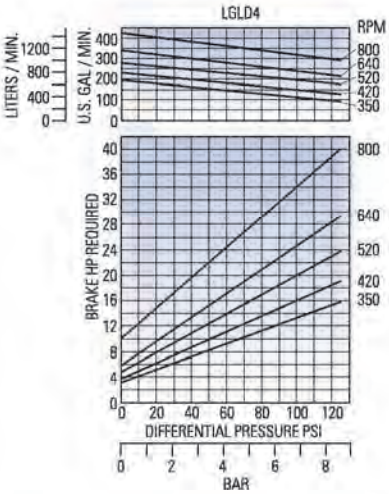

Performance Curves

These curves are based on approximate delivery rates when handling propane or anhydrous ammonia at 80°F (26.7°C). Line restrictions such as excess flow valves, elbows, etc. will adversely affect deliveries. For propane at 32°F (0°C), actual delivery will be further reduced to about 80% of nominal. Delivery of butane at 80°F (26.7°C) will be 60% to 70% of these values, and may run as low as 35% to 45% at 32°F (0°C). This loss of delivery is not a pump characteristic but is caused by natural thermodynamic phenomena of liquefied gases.

TLGLF3

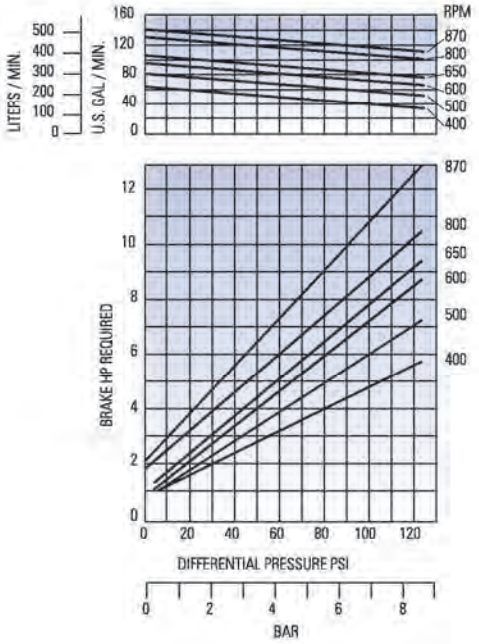

TLGLF4

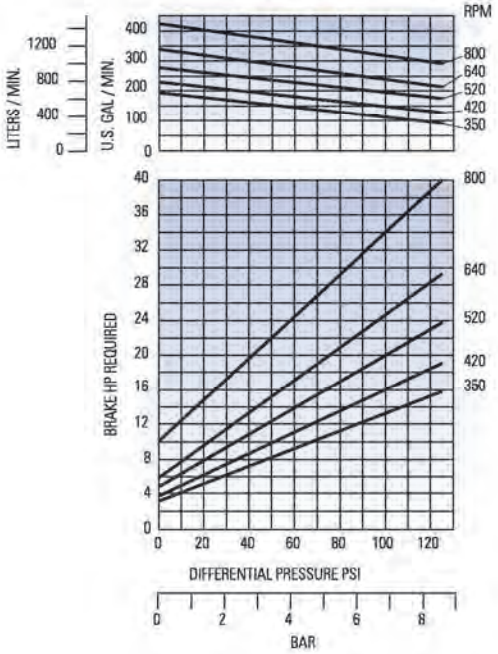

Selection Data

When selecting a pump for truck or transport systems, use the performance curves on these pages. For a standard pump or assembled unit, use the tables shown. The tables show brake horsepower limitations for the unit's drive and base. Check these limits against the pump brake horsepower requirements, as shown in the curves. For continuous duty applications, it is generally advisable to use pump speeds of 400 rpm or less. Peak shaving plant systems, for example, involve continuous pump duty. Moreover, pumps used in peak shaving plant systems should be sized for a capacity of at least 150% of the normal peak load to prevent system failure due to abnormal vaporization in the intake line.

VB DRIVE COMPONENTS

All sheaves listed use 3V belts. RPM outputs are based on 14" pump sheave and 1750 motor RPM.

3V Motor Sheaves				
Part Number	Groove Count	Bushing Type	Diameter	Output RPM
100008	3	SH	3.35"	420
100009	3	SH	3.65"	455
100010	3	SH	4.12"	520
100040	3	SDS	5.30"	640
100044	3	SDS	6.00"	780
100070	4	SDS	4.50"	520
100080	4	SDS	5.30"	640

3V Pump Sheaves			
Part Number	Groove Count	Bushing Type	Diameter
100050	3	SK	14"
100055	3	SF	19"
100100	4	SK	14"

VB Bases and Belt Guards	
200020	15" x 30" VB base, for use in 2" and 3" units
200040	Belt guard, fits 15" x 30" VB base
200030	17" x 40" VB base, for use in 4" units
200050	Belt guard, fits 17" x 40" VB base

Sheave Bushings		
Part Number	Bushing Type	Shaft Size
100168	SH	1 1/8" (1.125)
100170	SH	1 3/8" (1.375)
100175	SH	1 5/8" (1.625)
100110	SDS	1 1/8" (1.125)
100120	SDS	1 3/8" (1.375)
100150	SDS	1 5/8" (1.625)
100155	SDS	1 7/8" (1.875)
100180	SK	1 1/8" (1.125)
100190	SK	1 1/4" (1.250)
100195	SK	1 5/8" (1.625)

Lovejoy Couplings

For use in direct mount pump/motor assemblies

Part Number	Body Type	Shaft Size	Fits
300003	L090	5/8" (0.625)	56C Pumps
300005	L090	7/8" (0.875)	145T Motors
300010	L095	7/8" (0.875)	145T Motors
300020	L095	1 1/8" (1.125)	182T/C & 184T/C Motors
300030	L100	3/4" (0.750)	215C Pumps
300040	L100	7/8" (0.875)	145T Motors
300050	L100	1 1/8" (1.125)	182T/C & 184T/C Motors
300055	L100	1 3/8" (1.375)	213T/C & 215T/C Motors
Lovejoy Spiders			
300060	L090 & L095 Spider		
300070	L100 Spider		
Direct Mount Accessories			
200011	Direct mount base - 12" x 24" - For mounting 1" - 1 1/2" Pumps		
200025	Direct mount base - 15" x 30" - For mounting LGL156 Pumps		
200060	Coupling guard - safety cover for covering Lovejoy junction		

If purchasing a VB unit without a motor, please specify which motor will be used in the assembly. The actual motor model number is best if at all possible as our units are configured for use with EPFC (Explosion Proof Fan Cooled) rated motors. Frame size dimensions vary between motor ratings and this ensures the correct assembly is provided.

3V Belts	
Part Number	Belt Length
100200	63"
100203	60"
100205	67"
100210	71"
100220	85"

2 Bolt Tensioning Motor Bases

These bases are used to adjust belt tension in a VB drive arrangement.

Part Number	Frame Size
145A2	145T
182A2	182T
184A2	184T
213A3	213T
215A2	215T
254B2	254T
256B2	256T
284B2	284T

BYPASS VALVES

BLACKMER BYPASS VALVES

Differential bypass valves are designed to protect pumps and system components from excessive pressure damage. Weld flanges are available by special order.

Item #	Size	Pump Size	Pressure Setting	Adjust. Range	Cap.
BV-3/4	3/4"	1 1/4"-1 1/2"	95 psi	70-100 psi	50 GPM
BV-1	1"	1 1/4"-1 1/2"	95 psi	70-100 psi	50 GPM
BV-1 1/4	1 1/4"	1 1/2"-2"	95 psi	70-125 psi	125 GPM
BV-1 1/2	1 1/2"	2"-3"	95 psi	70-125 psi	125 GPM
BV-2-30	2"	3"-4"	30 psi	20-40 psi	225 GPM
BV-2-55	2"	3"-4"	55 psi	41-70 psi	225 GPM
BV-2-95	2"	3"-4"	95 psi	90-125 psi	225 GPM

BLACKMER BYPASS VALVES BLACKMER ® INTRODUCES HIGH PRESSURE BV¾ & BV1

Blackmer® has now introduced the BV¾ and BV1 Bypass Valves with a high pressure spring option that allows a spring range from 151 to 200 psi (10.4 to 13.8 bar).

The high-pressure spring option is designed for use with Blackmer's LGL150 Series pumps in high-pressure applications such as auto-gas dispenser installations.

Do NOT use this option with other LPG pumps as the system could be over-pressurized.

The new spring option is UL-listed which will allow it to be used with LPG dispenser installations. This option will help save package costs by allowing the use of the smaller bypass valves and smaller diameter piping, which will better match pump flow rates.

Lead-time for the new spring option will be the same as standard Bypass Valve lead-time.

BLACKMER BYPASS VALVES

Use the tables below as a reference for spring changes to adjust differential pressures on the various Blackmer Bypass Valves.

BV-3/4 & 1" Blackmer Bypass Valves

Description	QTY	Part #
Spring (20-40 psi)[1]	1	471411
Spring (41-70 psi)	1	471412
Spring (71-100 psi) (Std.)	1	471415
Spring (101-125 psi) & (126-150 psi[3])	1	471420
Spring (151-200 psi)[4]	1	471428

BV-1 1/4 & 1 1/2" Blackmer Bypass Valves

Description	QTY	Part #
Spring (20-40 psi)	1	471415
SS Spring (20-40 psi) (BV-1 1/2A only)[3]	1	471417
Spring (41-70 psi)	1	471420
Spring (71-125 psi) (Std.)	1	471428
Spring (126-165 psi)	1	471428
Spring (166-200 psi)[2]	1	471426

BV-2" Blackmer Bypass Valves

Description	QTY	Part #
Spring (20-40 psi)	1	471803
Spring (41-70 psi)	1	471805
SS Spring (41-70 psi)[1, 3]	1	471815
Spring (71-90 psi)	1	471811
Spring (91-125 psi) (Std.)	1	471806
Spring (126-150 psi)	1	471810

[1] Used on BV-1 only.

[2] Not U.L. listed.

[3] For use with pumps rated over 125 psi differential pressure.

[4] For use with pumps rated over 150 psi differential pressure.

BLACKMER PUMP KITS

Rebuild kits include maintenance kit components, as well as the liner and rotor / shaft assembly. Kits **DO NOT** include relief valve parts.

Pump	Maintenance Kit	Rebuild Kit
LGF1E & PE	898994*	
LGRLF1 1/4	898976*	899076
LGL1 1/4	898976*	899077
LGL1 1/2	898976*	899078
LGL154A	899222	
LGL156A	899222	
LGL158A & B	899222	
LGLD2E	898979	899079**
LGLD3F	898981	899081**
LGL3021A	899195	899095
LGLD4	898922	899022**
TLGLF3C	898980	899080**
TLGLF4A&B	898922	899022**

***Kit may also be used for 4 vane pump models**

****Kits are double shaft**

BLACKMER PARTS LIST

PUMP MODELS: LGF1E, LGB1E, LGF1PE, LGB1PE

Keep with 501-A00 Installation, Operation and Maintenance.

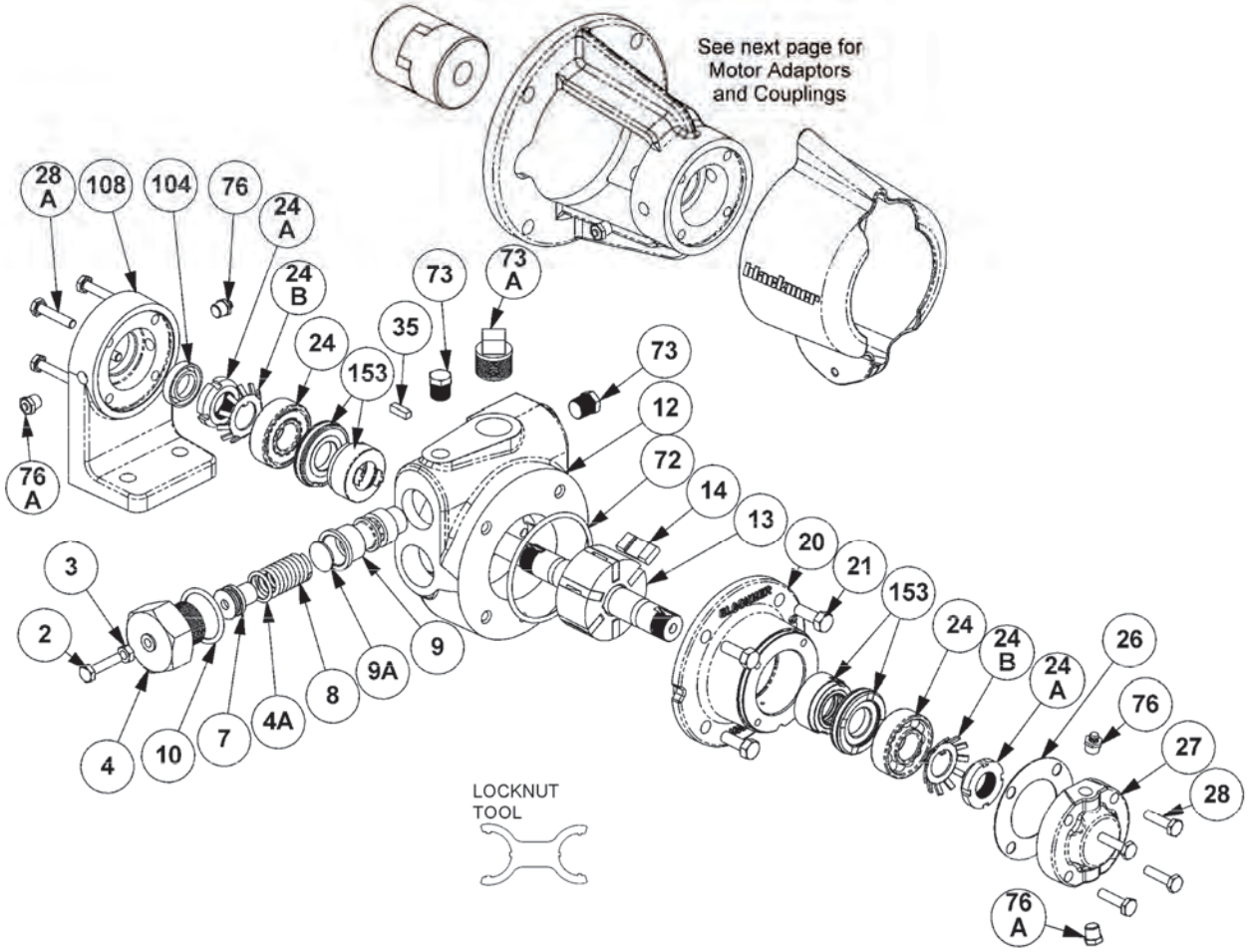

Ref. No.	Description	Parts per Pump	Part No.	Ref. No.	Description	Parts per Pump	Part No.
2	Adjusting Screw – Relief Valve (R/V)	1	[2] 432901	24A	Locknut – Bearing	2	903531
3	Locknut – Adjusting Screw	1	[2] 922811	24B	Lockwasher – Bearing	2	[1] 903532
4	Cover – R/V	1	412901	26	Gasket – Bearing Cover	1	[1] 383075
4A	O-Ring – Spring Guide	1	[1, 2] 711940	27	Bearing Cover	1	043071
7	Spring Guide – R/V	1	[2] 422901	28	Capscrews – Bearing Cover	4	920080
8	Spring – R/V	1	[2] 472901	28A	Bracket Mounting Screws	4	920090
9	Valve – R/V	1	[2] 452901	35	Key – Shaft, Square	1	[1, 4] 909152
9A	Disc – R/V	1	[2] 442901	72	O-Ring – Head	1	[1] 711941
10	O-Ring – R/V Cover	1	[1, 2] 701965	73	Gage Plug (1/4")	2	908198
12	Cylinder – LGF1, LGB1	1	022914	73A	Gage Plug (3/4")	1	908225
	Cylinder – LGF1P, LGB1P		022915	76	Grease Fitting	2	317815
13	Rotor & Shaft Assembly, Six Vane (Includes Ref. Nos. 24A & 24B)	1	262907	76A	Grease Relief Fitting	2	701992
				104	Grease Seal	1	[1] 331934
14	Vane – Duravane	6	[1,3] 092913	108	Mounting Foot - LGB1(P)E	1	832913
20	Head	1	032905		Tool - Locknut		903090
21	Capscrews – Head	4	920178		Kit – RV Maintenance		899094
24	Ball Bearing	2	[1] 903405		Kit – Maintenance (6-Vane)		898994

[1] Included in Maintenance Kit. [2] Included in RV Kit [3] Install the vanes with the slot facing the direction of rotation.
[4] Maintenance Kit also includes Woodruff Key 909126 used previously

PUMP MODELS: LGF1E, LGB1E, LGF1PE, LGB1PE (CONTINUED)

MECHANICAL SEAL

Ref. No.	Part Name	Parts Per Pump	Part No.
153	Mechanical Seal Assembly	2	[1] 332920
153A**	Jacket Assembly – Seal	2	**
153B**	Stationary Seat (Steel)	2	**
153D	O-Ring – Stationary Seat (Buna-N)	2	711916
153F**	Seal Face (Carbon)	2	**
153G	O-ring – Rotating (Buna-N)	2	711939

[1] Included in Maintenance Kit

** Ref. Nos. 153A, 153B & 153F are not available as separate repair parts.

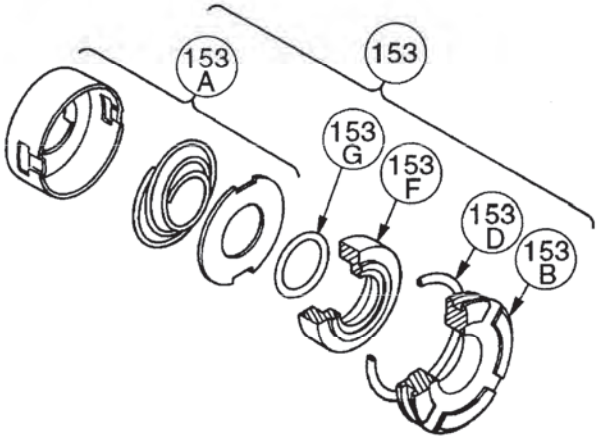

NEMA C-Faced Motor Adaptors – LGF Models

Ref. No.	Part Name	Parts Per Pump	Part No.
28B**	Motor Adaptor Mounting Screws	4	920101
28C	Guard Screw	1	920026
34	Coupling Half – Pump	1	906150
	Coupling Half – Motor 56C		906151
	Coupling Half – Motor 143/145TC,184C		906147
	Coupling Spider		906155
108	Motor Adaptor – Unfooted	1	832912
	Motor Adaptor- Footed		833000
108A	Capscrew – Motor Adaptor	4	920331
186	Guard	1	804120

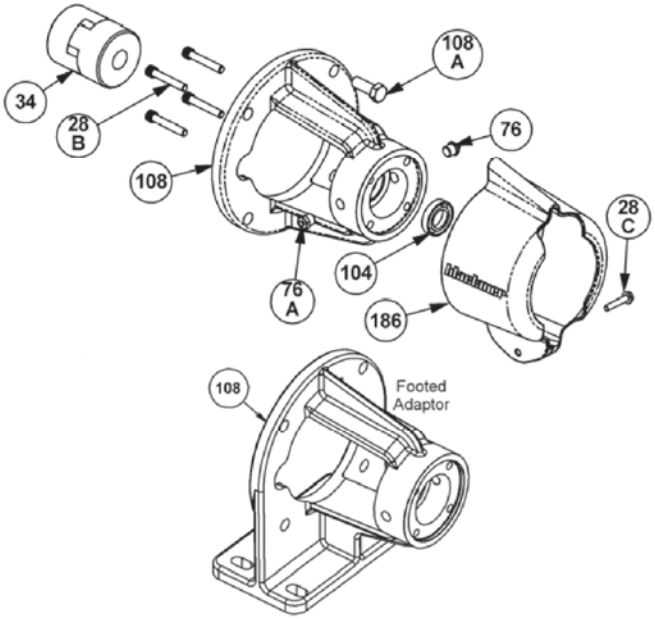

IEC Motor Adaptors – LGF Models

Ref. No.	Description	Parts per Pump	Part No.
28B	Motor Adaptor Mounting Screws	4	920101
28C	Guard Screw	2	920026
34	Coupling Half – Pump	1	906183
	Coupling Spider		906176
	Coupling Half – Motor (IEC 90)		906186
76	Grease Fitting	1	317815
76A	Grease Relief Fitting	1	701992
76B	Extension Coupling	2	701905
104	Grease Seal	1	331934
108A	Capscrew – Motor Adaptor to Motor	4	920043
108C	Motor Adaptor (IEC90 B14A) Includes Ref. Nos. 76, 76A & 76B	1	832920
108D	Washer	4	792094
186C	Guard Half	2	804196

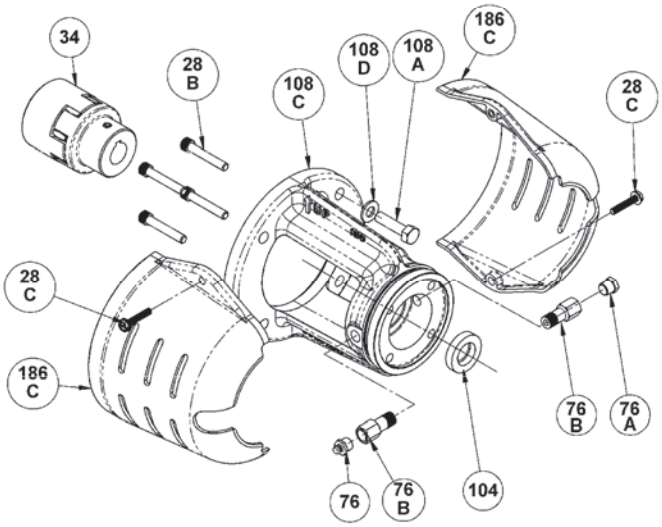

BLACKMER PARTS LIST

PUMP MODELS: LGRL1.25, LGL1.25, LGL1.5
LGRLF1.25A, LGLF1.25A, LGLF1.5A

Keep with Instructions 501-B00 for Installation, Operation and Maintenance

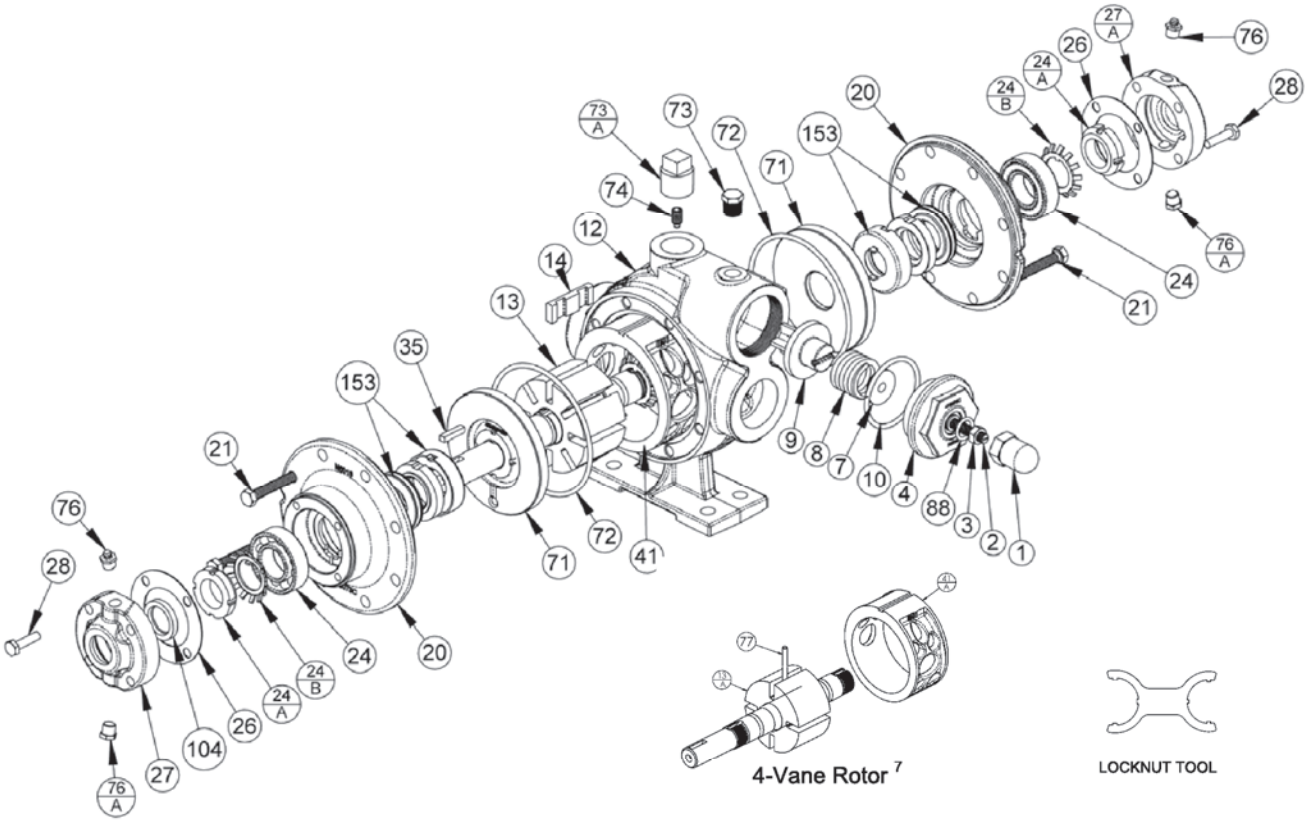

Ref. No.	Description	Parts per Pump	Part No.	Ref. No.	Description	Parts per Pump	Part No.
1	Cap – Relief Valve (R/V)	1	413200	27A	Bearing Cover – Outboard	1	043071
2	Adjusting Screw – R/V	1	433909	28	Capscrews – Bearing Cover	8	920080
3	Locknut – Adjusting Screw	1	922923	35	Shaft Key [8]	1	[1] 909152
4	Cover – R/V	1	413076	41	Liner – LGRL(F)1.25 [8 - Vane Only]	1	[2] 183019
7	Spring Guide – R/V	1	423955		Liner – LGL(F)1.25 [8 - Vane Only]		[2] 183020
8	Spring – R/V (81 – 150 psi)	1	471428		Liner – LGL(F)1.5 [8 - Vane Only]		[2] 183310
9	Valve - R/V	1	453077	71	Disc	2	[1] 063075
10	O-Ring – R/V Cover	1	[1] 711924	72	O-Ring – Head	2	[1] 701918
12	Casing with feet (1.25)	1	013075	73	Gage Plug (1/4")	1	908198
	Casing with feet (1.5)		013376	73A	Gage Plug (3/4")	1	[6] 908225
13	Rotor & Shaft Assembly, Eight Vane (with Ref. Nos. 24A & 24B)	1	[2] 262300	74	Setscrew – Liner	1	922088
				76	Grease Fitting	2	317815
14	Vane – Duravane	8	[1] 093088	76A	Grease Relief Fitting	2	701992
20	Head	2	033073	88	O-Ring – R/V Cap	1	[1] 701949
21	Capscrews – Head	16	920276	104	Grease Seal	1	[1] 331927
24	Ball Bearing	2	[1] 903114	—	Tool - Locknut	—	903090
24A	Locknut – Bearing	2	[2] 903534	—	Kit - Maintenance [8 Vane]	—	898976
24B	Lockwasher – Bearing	2	[1] 903533	—	Kit - Rebuild LGRL(F)1.25(A) [8 Vane]	—	899076
26	Gasket - Bearing Cover	2	[1] 383075	—	Kit - Rebuild LGL(F)1.25(A) [8 Vane]	—	899077
27	Bearing Cover – Inboard	0-1	043070	—	Kit - Rebuild LGL(F)1.5(A) [8 Vane]	—	899078

[1] Included in Maintenance Kits and Rebuild Kits [2] Included in Rebuild Kits.
[6] Ref. No. 73A: Older pumps may use a 1/4" plug (pn 908198) or 1/2" plug (pn 908215).
[7] See page 4 re parts for older pumps fitted with a 4-vane rotor.
[8] Ref. No. 35: Early pumps used Woodruff Key 909125

PUMP MODELS LGR1.25, LGRLF1.25A, LGL1.25, LGLF1.25A, LGL1.5, LGLF1.5A (CONTINUED)

NEMA C-Face Motor Adaptors
Models: LGRLF1.25A, LGLF1.25A, LGLF1.5A

Ref. No.	Description	Parts per Pump	Part No.
12A	Casing without Feet – LG(R)LF1.25	1	013077
	Casing without Feet – LGLF1.5		013377
26	Gasket - Bearing Cover	1	383075
28A	Motor Adaptor Mounting Screws	4	920101
28C	Guard Screw	1	920026
34	Coupling Half – Pump	1	906147
	Coupling Spider		906155
	Coupling Half – Motor (56C)		906151
	Coupling Half – Motor (143TC,145TC,184C)		906147
	Coupling Half – Motor (182TC,184TC,215C)		906146
56	Capscrews – Adapter Ring Mounting	4	920480
76	Grease Fitting	1	317815
76A	Grease Relief Fitting	1	701992
86	Motor Adapter Ring - 182TC,184TC,215C	1	832914
104	Grease Seal	1	331927
108	Motor Adaptor – Unfooted Motor Adaptor – Footed (Both include Ref. 76 & 76A)	1	832912 833000
108B	Capscrews - Motor Adaptor	4	920331
186	Guard	1	804120

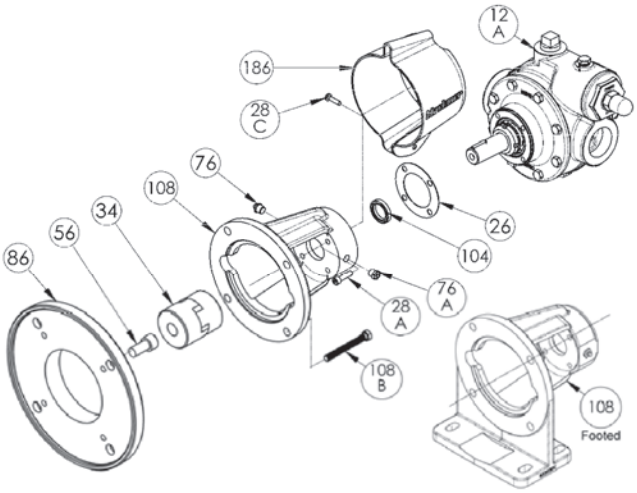

MECHANICAL SEAL

Ref. No.	Part Name	Parts Per Pump	Part No.
153	Mechanical Seal Assembly	2	[1] 333045
153A	Stationary Seat (Hardened Steel)	2	**
153B	Seal Face (Carbon)	2	**
153C	Jacket Assembly	2	**
153D	O-Ring – Stationary (Buna-N)	2	711916
153E	O-Ring – Rotating (Buna-N)	2	711915

[1] Included in Maintenance Kits and Rebuild Kits
** Not available as separate replacement parts.

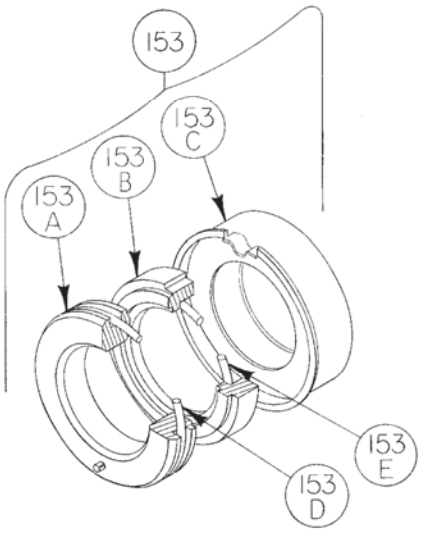

4-VANE ROTOR/SHAFT PARTS

Ref. No.	Part Name	Parts Per Pump	Part No.
13A	Rotor & Shaft Assembly, Four Vane (Includes Ref. Nos. 24A & 24B)	1	[2] 263076
14	Vane – Duravane	4	[1] 093088
41A	Liner – LGRL(F)1.25 [4 - Vane Only]	1	[2] 183003
	Liner – LGL(F)1.25 [4 - Vane Only]		[2] 183004
	Liner – LGL(F)1.5 [4 - Vane Only]		[2] 183301
77	Push Rod – LGRL(F)1.25	2	[1] 123004
	Push Rod – LGL(F)1.25		[1] 123076
	Push Rod LGL(F)1.5		[1] 123401

Part Name	Part No.
Kit – Maint LGRL(F)1.25A [4 Vane]	898917
Kit - Maint LGL(F)1.25(A) [4 Vane]	898918
Kit - Maint LGL(F)1.5(A) [4 Vane]	898919
Kit - Rebuild LGRL(F)1.25A [4 Vane]	899017
Kit - Rebuild LGL(F)1.25(A) [4 Vane]	899018
Kit - Rebuild LGL(F)1.5(A) [4 Vane]	899019

BLACKMER PARTS LIST
PUMP MODELS: LGL154C, LGL156C, LGL158C

Keep with Installation, Operation and Maintenance Instructions 501-K00

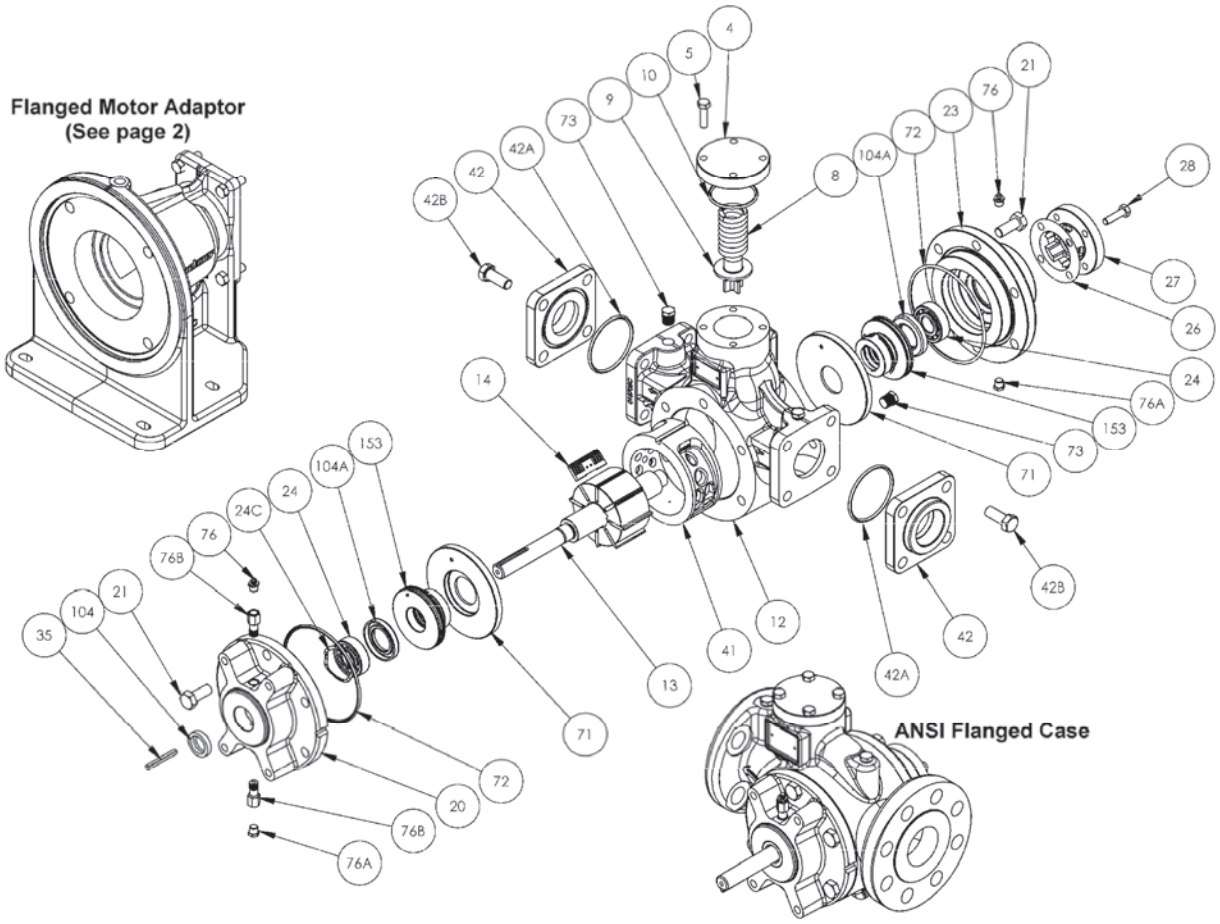

Ref. No.	Description	Parts Per Pump	Part No.	Ref. No.	Description	Parts Per Pump	Part No.
4	Cover - Relief Valve (R/V)	1	415701	35	Key – Shaft	1	[1] 909153
5	Capscrews - R/V Cover	4	920122	41	Liner (LGL158)	1	185701
8	Spring - R/V (225 psi)	1	471400		Liner (LGL156)		185710
9	Valve - R/V	1	455701		Liner (LGL154)		185711
10	O-Ring - R/V Cover	1	[1] 711924	42	Flanges	See page 319	
12	Casing – 4 Bolt Flange	1	015705	71	Disc	2	[1] 065701
	Casing – ANSI Flange		015702	72	O-Ring - Head	2	[1] 702169
13	Rotor & Shaft Asy.	1	265703	73	Gage Plug	2-4	908198
14	Vane - Duravane	8	[1] 094860	74	Key - Liner	1	909177
20	Head Inboard	1	035705	76	Grease Fitting	2	317815
21	Capscrews - Head	12	920468	76A	Grease Relief Fitting	2	701992
23	Head Outboard	1	035703	76B	Grease Fitting Extension	2	701905
24	Ball Bearing	2	[1] 903148	104	Grease Seal - Outer	1	[1] 331921
24C	Bearing Spring	1	[1] 903187	104A	Grease Seal - Inner	2	[1] 335702
26	Shim Kit (6 ea: .002", .005" & .010")	Varies	[1] 905172	—	Kit – Maintenance	—	899222
27	Bearing Cover	1	045701	—	Priming Valve	—	455750
28	Capscrews - Bearing Cover	4	920122		(for Underground Tank Installations)		

[1] Included in Maintenance Kit.

MECHANICAL SEAL – LPG

Ref. No.	Description	Parts Per Pump	Part No.
153	Mechanical Seal Assembly - SNCN	2	[1] 335703
153A	Stationary Seat (Steel)	2	**
153B	Seal Face (Carbon)	2	**
153C	Jacket Assembly	2	**
153D	O-Ring - Stationary (Buna-N)	2	701934
153E	O-Ring Rotating (Buna-N)	2	711917

[1] Included in Maintenance Kit and Rebuild Kit

** Mechanical Seal Ref. No. 153 is only sold as a complete assembly. Ref. Nos. 153A, 153B & 153C are not available as separate replacement parts.

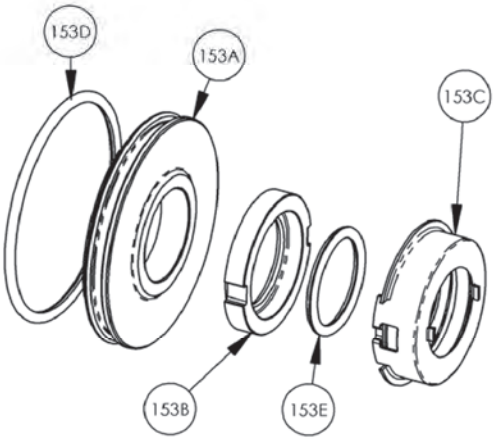

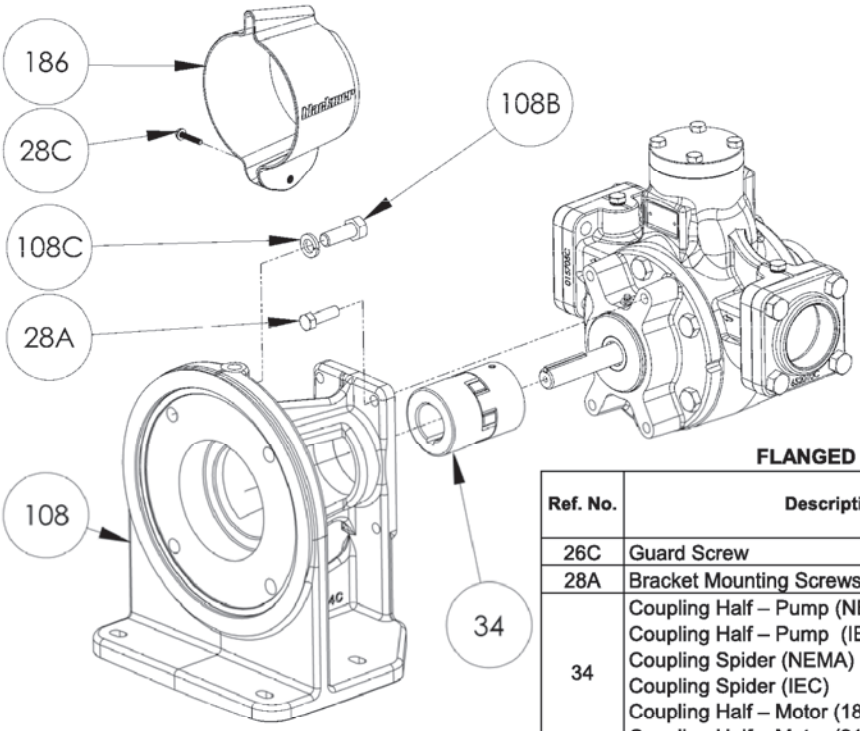

FLANGED MOTOR ADAPTOR

Ref. No.	Description	Parts per Pump	Part No.
26C	Guard Screw	1	920026
28A	Bracket Mounting Screws	4	920359
34	Coupling Half – Pump (NEMA)	1	906033
	Coupling Half – Pump (IEC)		906181
	Coupling Spider (NEMA)	1	906034
	Coupling Spider (IEC)		906178
	Coupling Half – Motor (182TC,184TC,215C)		906164
	Coupling Half – Motor (213TC, 215TC)		906032
	Coupling Half – Motor (IEC 112)	1	906180
	Coupling Half - Motor (IEC 132)		906179
108	Mounting Bracket – NEMA		833004
	Mounting Bracket – IEC 100/112 B5	1	833005
	Mounting Bracket – IEC 132 B14		833006
108B	Motor Mounting Screw (NEMA)		098277
	Motor Mounting Screw (IEC 100/112)	4	920055
	Motor Mounting Screw (IEC 132)		920050
108C	Lockwasher (NEMA)		909706
	Lockwasher (IEC 100/112)	4	909707
	Lockwasher (IEC132)		793095
186	Guard	1	804120

FLANGE OPTIONS (4 Bolt flange cases)

Ref. No.	Description	Parts per Pump	Part No.
42	Flange – 2" NPT	0 2	652010
	Flange – 2" Slip-on Weld		652024
	Flange – 2" Socket Weld El		655109
	Flange – 1.5" NPT		652028
	Flange – 1.5" Slip-on Weld		652026
	Flange – 1.25" NPT		652029
	Flange – 1.25" Slip-on Weld		652027
42A	O-Ring – Flange (Buna-N)	2	702004
42B	Capscrews – Flange	8	920491

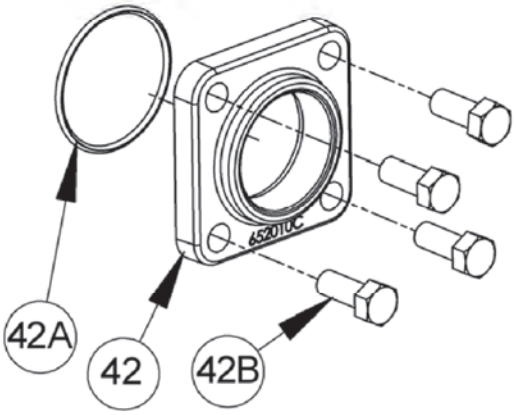

ANSI Flange Kit Part Number 655701 with:

Description	Qty	Description	Qty
Flange, 2" NPS, ANSI 300# RF Threaded	1	Flange, 1.5" NPS, ANSI 300# RF Threaded	1
Gasket 2", 600#	1	Gasket 1.5", 600#	1
Stud 5/8-11 x 3 1/2	8	Stud 3/4-10 x 3 3/4	4
Heavy Hex Nut 5/8-11	8	Heavy Hex Nut 3/4-10	4

OPTIONAL RISER SPACER

32	Bracket Riser	1	833008
32A	Capscrews - Bracket	4	920246
32B	Mounting Lockwashers	4	909613
32C	Mounting Washers	4	790494

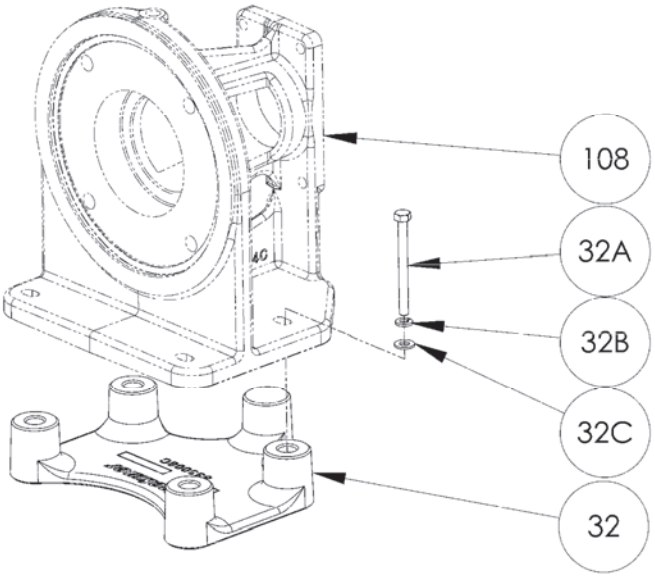

BLACKMER PARTS LIST
PUMP MODEL: LGL3021A

Keep with 501-L00 Installation, Operation and Maintenance Instructions

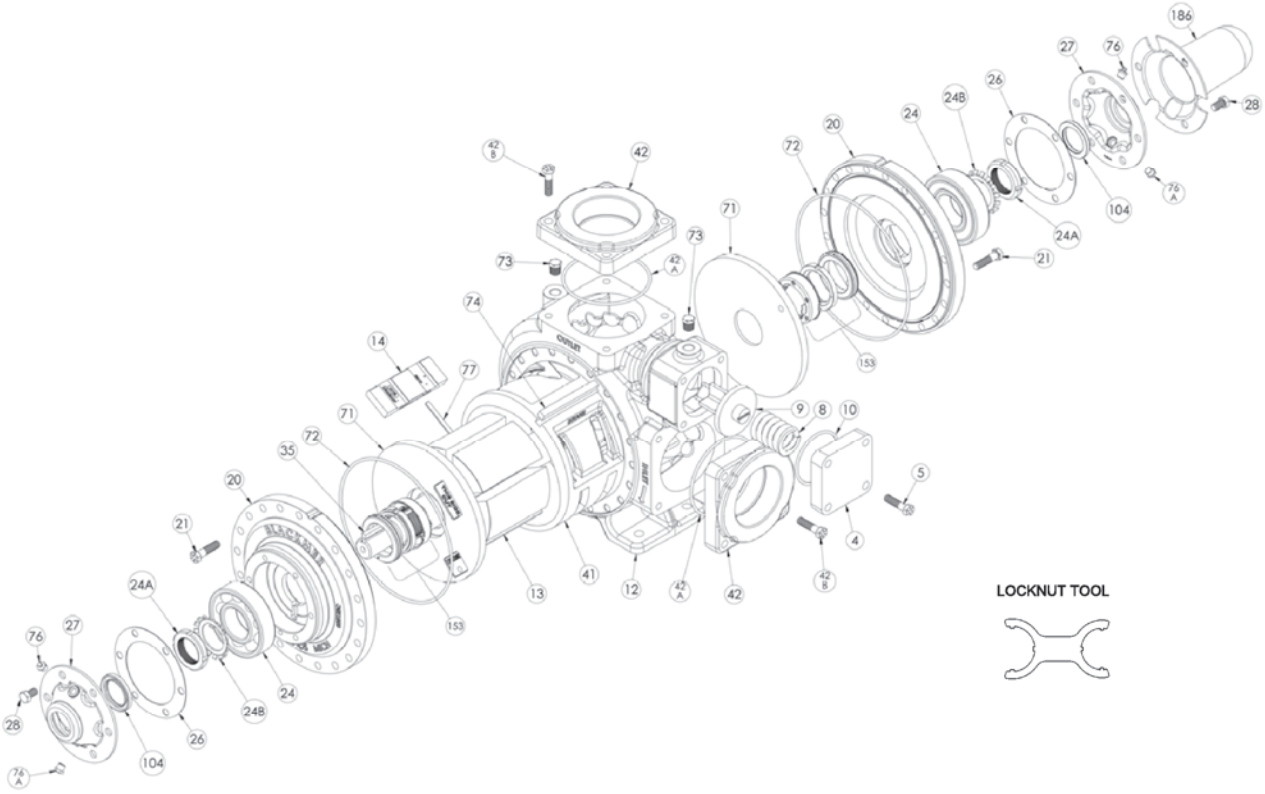

Ref. No.	Description	Parts Per Pump	Part No.	Ref. No.	Description	Parts Per Pump	Part No.
4	Cover - Relief Valve (R/V)	1	415115	41	Liner	1	[2] 185111
5	Capscrews - R/V Cover	4	920379	42	Flange – NPT 3"	2	655132
8	Spring - R/V	1	[1] 475135		Flange – NPT 4"		655133
9	Valve - R/V	1	455129	42A	O-Ring – 3" Flange	2	[1] 712245
10	O-Ring - R/V Cover	1	[1] 711941		O-Ring – 4" Flange		[1] 794126
12	Casing	1	015131	42B	Capscrew - NPT Flange	8	920379
13A	Rotor & Shaft Asy.	1	[2] 265190	71	Disc	2	[1] 065112
	(Includes Ref. Nos. 24A & 24B)			72	O-Ring - Head	2	[1] 702041
14	Vane - Duravane	6	[1] 095131	73	Gage Plug	2	908198
20	Head	2	035128	74	Key – Liner	1	[2] 185191
21	Capscrews - Head	40	920379	76	Grease Fitting	2	317815
24	Ball Bearing	2	[1] 903166	76A	Grease Relief Fitting	2	701992
24A	Locknut - Bearing	2	[2] 903523	77	Push Rod	3	[1] 125110
24B	Lockwasher - Bearing	2	[1] 903524	104	Grease Seal	2	[1] 331908
26	Gasket - Bearing Cover	2	[1] 385125	186	Shaft Protector	1	341801
27	Bearing Cover	2	041815	—	Tool – Locknut	—	903091
28	Capscrews - Bearing Cover	12	920285	—	Kit – Maintenance	—	899195
35	Key – Shaft, 1/4" Square	1	[1] 909209	—	Kit – Rebuild	—	899095

[1] Included in Maintenance Kit and Rebuild Kit [2] Included in Rebuild Kit

MECHANICAL SEAL

NH_3 OR DUAL SERVICE – SNCN (ID Code = QA)

Ref. No.	Part Name	Parts Per Pump	Part No.
153	Mechanical Seal Assembly	2	[1] 335225
153A	Stationary Seat (Steel)	2	**
153B	Seal Face (Carbon)	2	**
153C	J cket Assembly	2	**
153D	O-Ring - Stationary (Buna-N)	2	702025
153E	O-Ring Rotating (Buna-N)	2	711912

[1] Included in Maintenance Kit and Rebuild Kit

** NOTE: Mechanical Seal Ref. No. 153 is only sold as a complete assembly. Ref. Nos. 153A, 153B & 153C are not available as separate replacement parts.

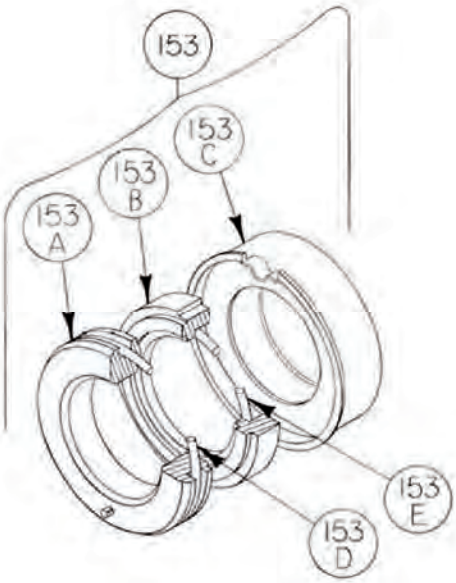

BLACKMER PARTS LIST
PUMP MODELS: LGLH2A

Keep with Instructions 501-J00 for Installation, Operation and Maintenance

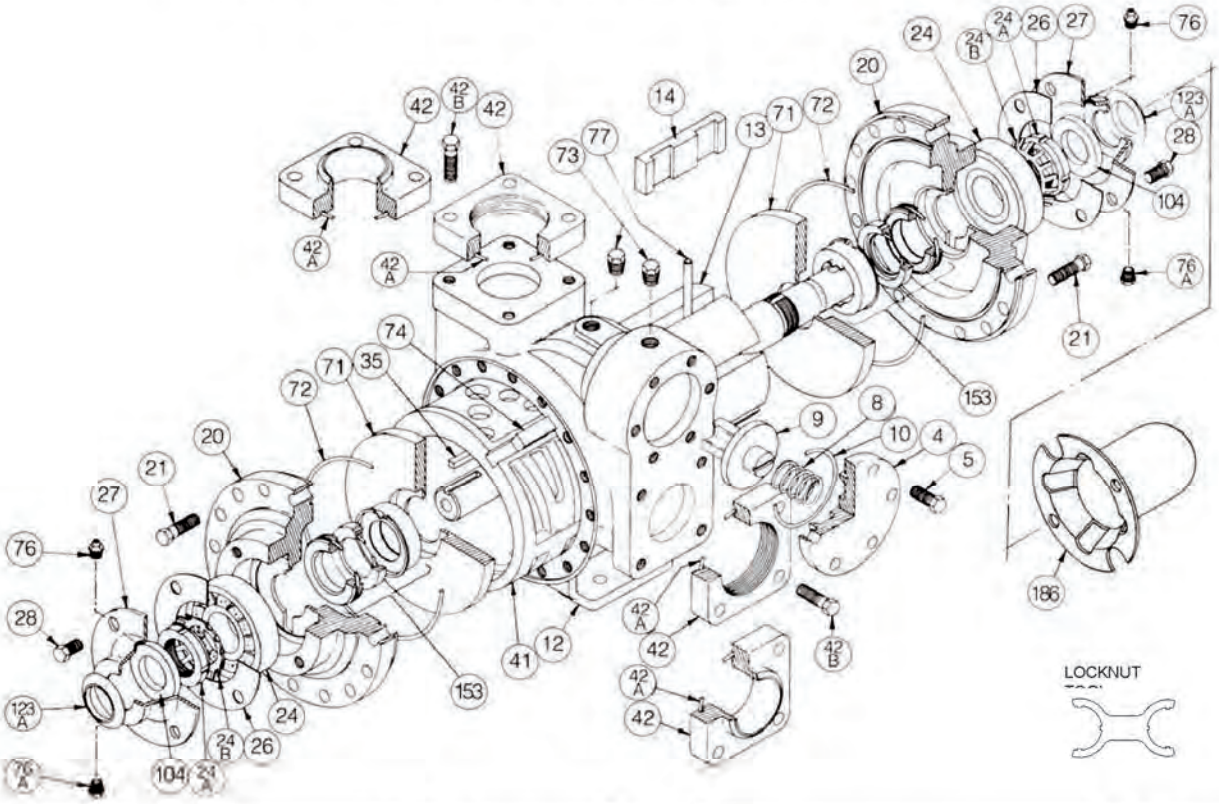

Ref. No.	Description	Parts Per Pump	Part No.
4	Cover - Relief Valve (R/V)	1	414401
5	Capscrews - R/V Cover	6	920331
8	Spring - R/V (190 psi)	1	[1] 471622
9	Valve - R/V	1	454405
10	O-Ring - R/V Cover	1	[1] 701919
12	Casing	1	014405
13	Rotor & Shaft Asy. (Includes Ref. Nos. 24A & 24B)	1	[4] 264446
14	Vane - Duravane	6	[1] 091419
20	Head	2	034416
21	Capscrews - Head	32	920351
24	Spherical Roller Bearing	2	[1] 903191
24A	Locknut - Bearing	2	903521
24B	Lockwasher - Bearing	2	[1] 903522
26	Gasket - Bearing Cover	2	[1] 383940
27	Bearing Cover	2	041431
28	Capscrews - Bearing Cover	8	920285
35	Key – Shaft [3]	1	[1] 909209
41	Liner	1	184405

Ref. No.	Description	Parts Per Pump	Part No.
42	Flange - NPT	2	654401
	Flange - Weld		654405
42A	O-Ring - Flange	2	[1] 702004
42B	Capscrew - NPT Flange	8	920384
	Capscrew - Weld Flange		920351
71	Disc	2	[1] 064412
72	O-Ring - Head	2	[1] 702022
73	Gage Plug	2	908198
74	Key - Liner	1	183991
76	Grease Fitting	2	317815
76A	Grease Relief Fitting	2	701992
77	Push Rod	3	[1] 123905
104	Grease Seal	2	[1] 331918
123A	Dirt Shield	2	[1] 701480
186	Shaft Protector	1	341601
—	Tool - Locknut	—	903091
—	Kit – Maintenance	—	899221

[1] Included in Maintenance Kit
[3] Previous versions used Woodruff Key 909130
[4] Marked "46"on shaft ends.

MECHANICAL SEAL – NH_3 OR DUAL SERVICE – SNCN (ID Code = QA)

Ref. No.	Part Name	Parts Per Pump	Part No.
153	Mechanical Seal Assembly	2	[1] 334439
153A	Stationary Seat (Steel)	2	**
153B	Seal Face (Carbon)	2	**
153C	Jacket Assembly	2	**
153D	O-Ring - Stationary (Buna-N)	2	711924
153E	O-Ring Rotating (Buna-N)	2	711918

[1] Included in Maintenance Kit
** NOTE: Mechanical Seal Ref. No. 153 is only sold as a complete assembly. Ref. Nos. 153A, 153B & 153C are not available as separate replacement parts.

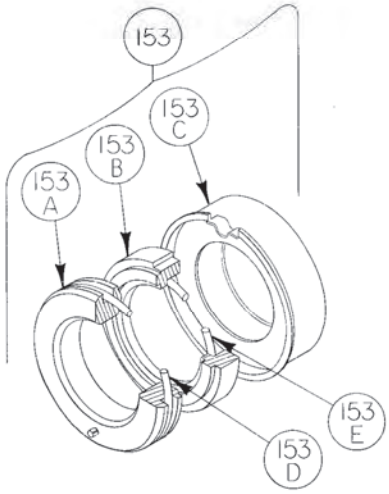

OPTIONAL HYDRAULIC MOTOR ADAPTER PARTS

Ref. No.	Part Name	Parts Per Pump	Part No.
	Hydraulic Motor Adapter Kit		894425
26A	Gasket- Hydraulic Motor Adapter	1	383940
28A	Capscrew – Hydraulic Motor Adapter / Head	4	920369
34	Coupling w/ Setscrew – 1.25" straight key hydraulic motor shaft	1	906967
35	Key – Coupling	1	909184
76	Grease Fitting	1	317185
76A	Grease Relief Fitting	1	701992
135	Hydraulic Motor Adapter – (SAE A Flange)	1	041827
135A	Capscrew – Adapter / Motor	2	920510

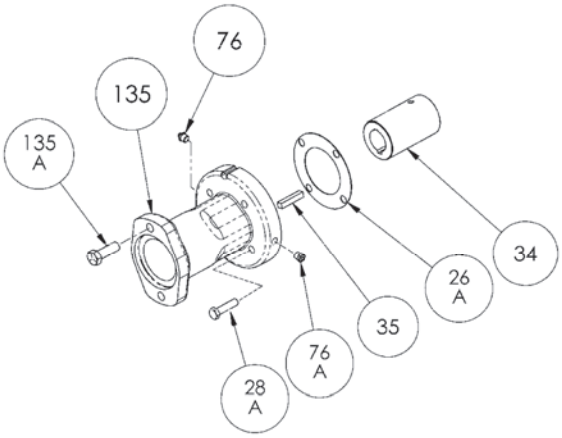

BLACKMER PARTS LIST

PUMP MODELS: LGLD2E, LGL2E, LGLD3F, LGL3F

and discontinued LGLD3E, LGL3E

Keep with 501-C00 Installation, Operation and Maintenance Instructions

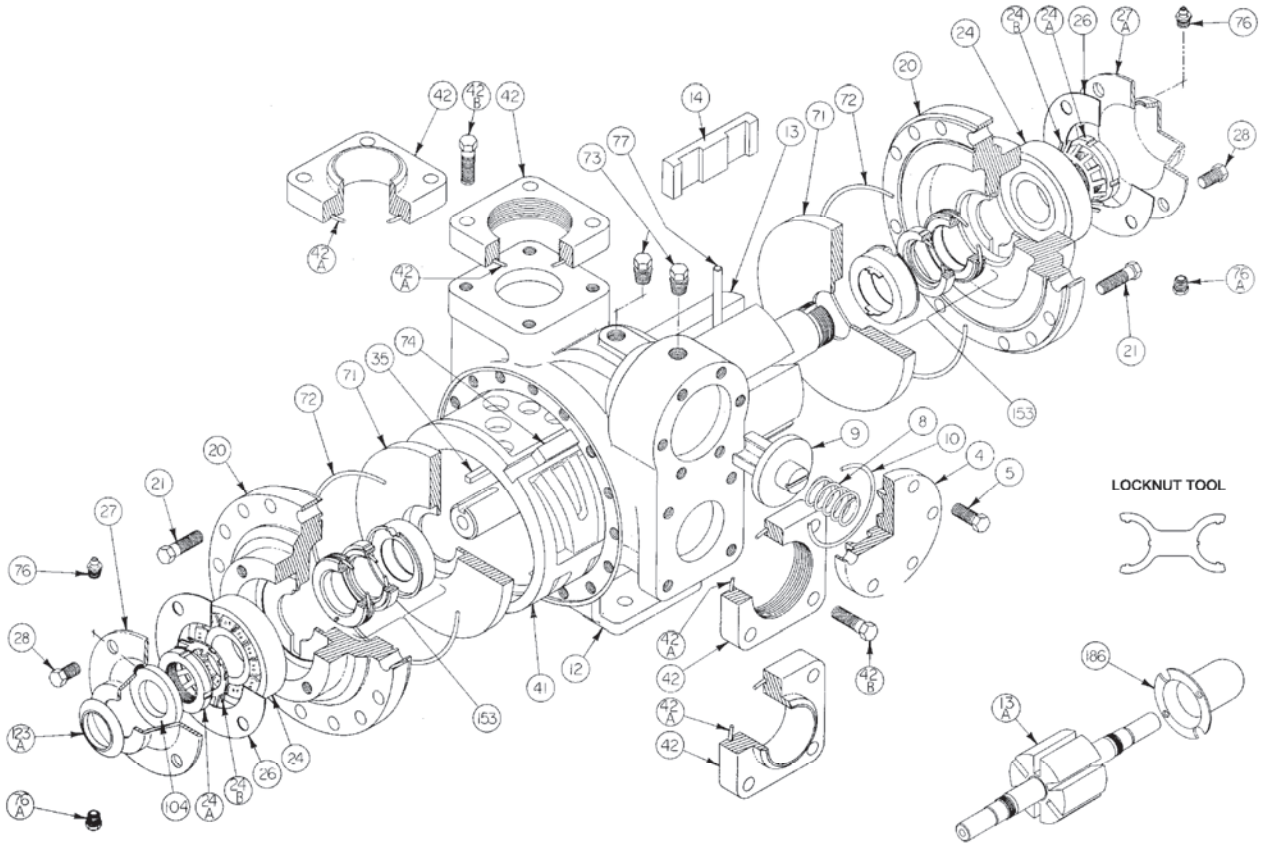

Ref. No.	Description	Parts Per Pump	Size 2 Part No.	Size 3 Part No.	Ref. No.	Description	Parts Per Pump	Size 2 Part No.	Size 3 Part No.
4	Cover - Relief Valve (R/V)	1	414401	415113	35	Key – Shaft, 1/4" Square	1	[1,7] 909209	[1,7] 909209
5	Capscrews - R/V Cover	6	920331	920331	41	Liner	1	[2] 184405	[2] 185111
8	Spring - R/V	1	[1] 471423	[1] 475135	42	Flange - NPT	2	654401	655112
9	Valve - R/V	1	454405	455129		Flange - Weld		654405	655102
10	O-Ring - R/V Cover	1	[1] 701919	[1] 701925	42A	O-Ring - Flange	2	[1] 702004	[1] 702002
12	Casing	1	014405	015127	42B	Capscrew - NPT Flange	8	920384	920547
13	Rotor & Shaft Asy. - LGL (Includes Ref. Nos. 24A & 24B)	1	264443	265149		Capscrew - Weld Flange		920351	920510
					71	Disc	2	[1] 064412	[1] 065112
13A	Rotor & Shaft Asy. – LGLD [5] (Includes Ref. Nos. 24A & 24B)	1	[2] 264445	[2] 265148	72	O-Ring - Head	2	[1] 702022	[1] 702041
					73	Gage Plug	2	908198	908198
14	Vane - Duravane (Std.)	6	[1] 091419	[1] 095131	74	Key – Liner	1	[2,8] 183991	[2] 185191
20	Head	2	034416	035128	76	Grease Fitting	2	317815	317815
21	Capscrews - Head (Size 2)	32	920351	N/A	76A	Grease Relief Fitting	2	701992	701992
	Capscrews - Head (Size 3)	40	N/A	920369	77	Push Rod	3	[1,6] 123905	[1,6] 125110
24	Ball Bearing	2	[1] 903156	[1] 903166	104	Grease Seal	1	[1,3] 331918	[1,3] 331908
24A	Locknut - Bearing	2	[2] 903521	[2] 903523	123A	Dirt Shield	1	[1,3] 701480	N/A
24B	Lockwasher - Bearing	2	[1] 903522	[1] 903524	186	Shaft Protector (LGLD Models Only)	1	341601	341801
26	Gasket - Bearing Cover	2	[1] 383940	[1] 385125					
27	Bearing Cover (Inboard) [3]	1	041431	041815	—	Tool - Locknut	—	903091	903091
27A	Bearing Cover (Outboard) [4]	1	041433	041817	—	Kit – Maintenance	—	898979	898981
28	Capscrews - Bearing Cover	8 - 12	920285	920285	—	Kit – Rebuild	—	899079	899081

[1] Included in Maintenance Kit and Rebuild Kit [2] Included in Rebuild Kit

The following applies to double end shaft pumps (LGLD): [3] Use Two [4] Use None

[5] Double-Ended Rotor & Shaft. [6] 2" pushrod is metal, 3" is composite.

[7] Pumps before April 2008 used Woodruff key 909130, included in Maintenance kits. [8] Pump before 1995 require liner key 184407.

MECHANICAL SEAL – NH_3 OR DUAL SERVICE – SNCN (ID Code = QA)

Ref. No.	Part Name	Parts Per Pump	Size 2 Part No.	Size 3 Part No.
153	Mechanical Seal Assembly	2	[1] 334439	[1] 335225
153A	Stationary Seat (Steel)	2	**	**
153B	Seal Face (Carbon)	2	**	**
153C	Jacket Assembly	2	**	**
153D	O-Ring - Stationary (Buna-N)	2	711924	702025
153E	O-Ring Rotating (Buna-N)	2	711918	711912

[1] Included in Maintenance Kit and Rebuild Kit
** NOTE: Mechanical Seal Ref. No. 153 is only sold as a complete assembly. Ref. Nos. 153A, 153B & 153C are not available as separate replacement parts.

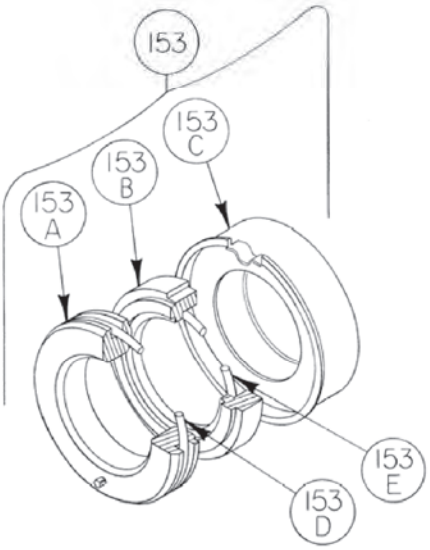

OPTIONAL HYDRAULIC MOTOR ADAPTER PARTS

Ref. No.	Part Name	Parts Per Pump	Size 2 Part No. 1-¼" Hyd Motor Shaft	Size 3 Part No. 1-¼" Hyd Motor Shaft	Size 3 Part No. 1" Hyd Motor Shaft
See Below	**Hydraulic Motor Adapter Kit ***	See Below	894425	895140	895143
26A	Gasket- Hydraulic Motor Adapter	1	383940	381817	381817
28A	Capscrew – Hydraulic Motor Adapter / Head	4 / 6	920369	920369	920369
34	Coupling w/ Setscrew – straight key hydraulic motor shaft	1	906967	906967	906990
35	Key – Coupling	1	909184	909184	909184
76	Grease Fitting	1	317815	317815	317815
76A	Grease Relief Fitting	1	701992	701992	701992
135	Hydraulic Motor Adapter – SAE A Flange	1	041827	041831	041831
135A	Capscrew – Adapter / Motor	2	920510	920510	920510

* Hydraulic Motor Adapter Kits shipped prior to Spring 2002 were of a two piece design – refer to page 206-C00.

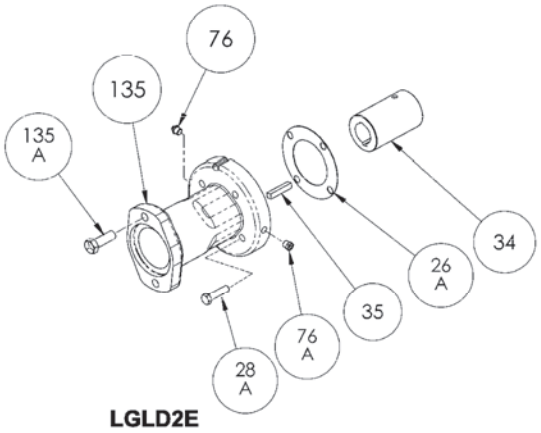

LGLD2E

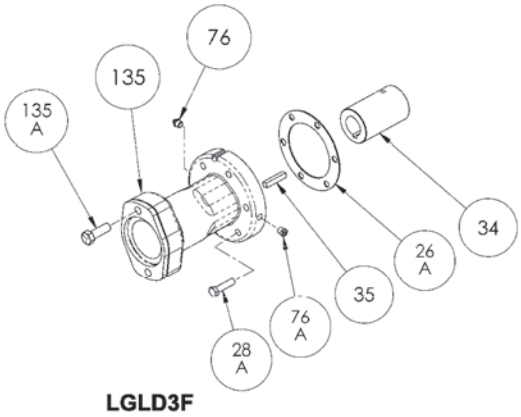

LGLD3F

BLACKMER PARTS LIST
PUMP MODEL: LGLD4B

Keep with Instructions 501-E00 for Installation, Operation and Maintenance

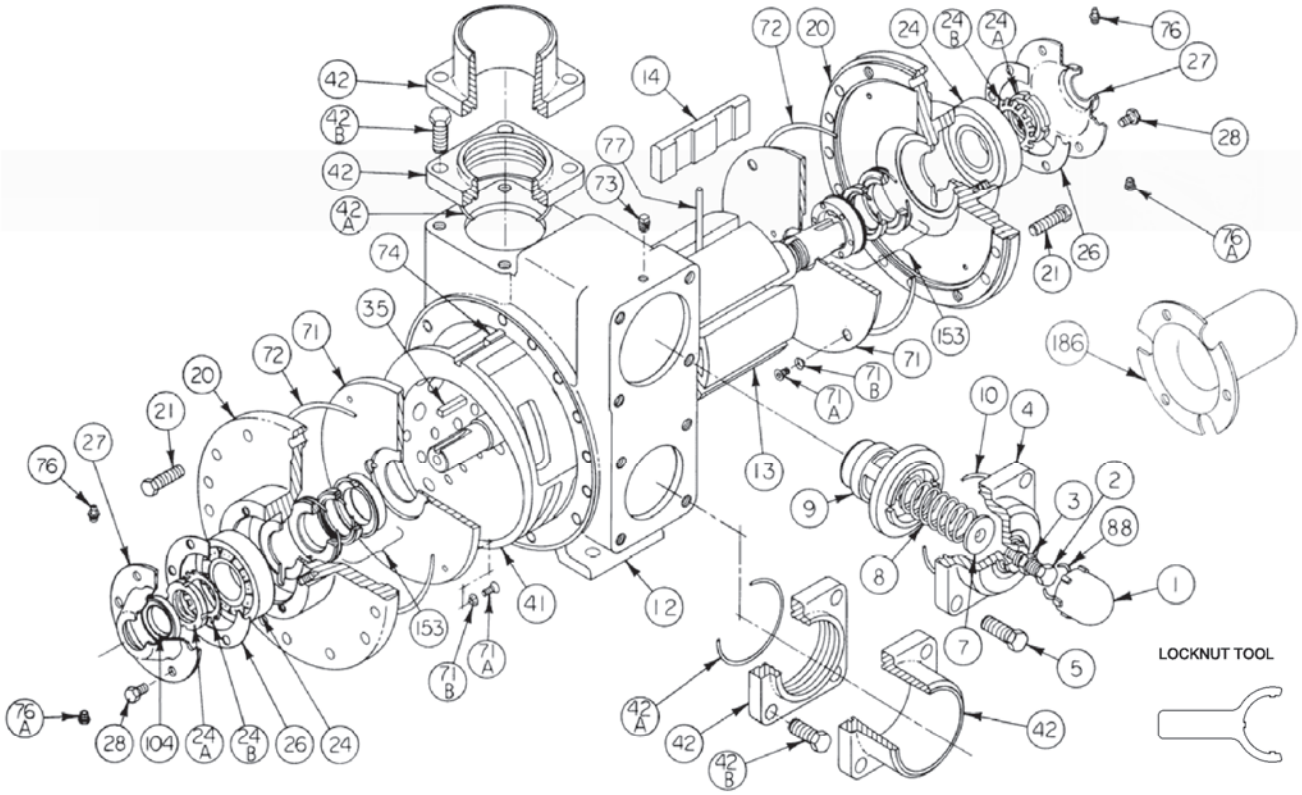

Ref. No.	Description	Parts Per Pump	Part No.	Ref. No.	Description	Parts Per Pump	Part No.
1	Cap - Relief Valve (R/V)	1	413957	41	Liner	1	[2] 182000
2	Adjusting Screw - R/V	1	436310	42	Flange - 3" NPT	1 - 2	652012
3	Locknut - Adjusting Screw	1	432039		Flange - 3" Weld		652007
4	Cover - R/V	1	412001		Flange - 4" Weld		652005
5	Capscrew - R/V Cover	4	920663	42A	O-Ring - NPT, Weld Flange	2	[1] 701937
7	Spring Guide - R/V	1	426355	42B	Capscrew - NPT Flange	8	920663
8	Spring - R/V	1	[1] 472039		Capscrew - Weld Flange		920640
9	Valve - R/V	1	452001	71	Disc	2	[1] 062039
10	O-Ring - R/V Cover	1	[1] 701946	71A	Machine Screw - Disc	8	[2] 920015
12	Casing	1	012019	71B	Lockwasher - Machine Screw	8	[2] 909634
13	Rotor & Shaft Asy, Dbl. End	1	[2] 262041	72	O-Ring - Head	2	[1] 702039
	(Includes Ref. No. 24A & 24B)			73	Gage Plug	2	908198
14	Vane - Duravane	6	[1] 092019	74	Key - Liner	1	[2] 182040
20	Head	2	032041	76	Grease Fitting	2	317815
21	Capscrews - Head	28	920532	76A	Grease Relief Fitting	2	701992
24	Ball Bearing	2	[1] 903166	77	Push Rod – composite - LGLD4B	3	[1] 122009
24A	Locknut – Bearing	2	[2] 903541	88	O-Ring - R/V Cap	1	[1] 701926
24B	Lockwasher – Bearing	2	[1] 903542	104	Grease Seal – LGLD4B	2	[1] 331908
26	Gasket - Bearing Cover	2	[1] 385125	186	Shaft Protector	1	341801
27	Bearing Cover – LGLD4B	2	041815		Tool – Locknut		903092
28	Capscrews - Bearing Cover	12	920285		Kit – Maintenance		898922
35	Key – Shaft	1	[1] 909183		Kit – Rebuild -LGLD4B		899022

[1] Included in Maintenance Kit and Rebuild Kit [2] Included in Rebuild Kit only

MECHANICAL SEAL - STANDARD

Ref. No.	Part Name	Parts Per Pump	Part No.
153	Mechanical Seal Assembly	2	[1] 332050
153A	Stationary Seat (Hardened Steel)	2	**
153B	Seal Face (Carbon)	2	**
153C	Jacket Assembly	2	**
153D	O-Ring - Stationary (Buna-N)	2	701934
153E	O-Ring - Rotating (Buna-N)	2	711912

[1] Included in Maintenance Kit and Rebuild Kits
** NOTE: Mechanical Seal Ref. No. 153 is only sold as a complete assembly. Ref. Nos. 153A, 153B & 153C are not available as separate replacement parts.

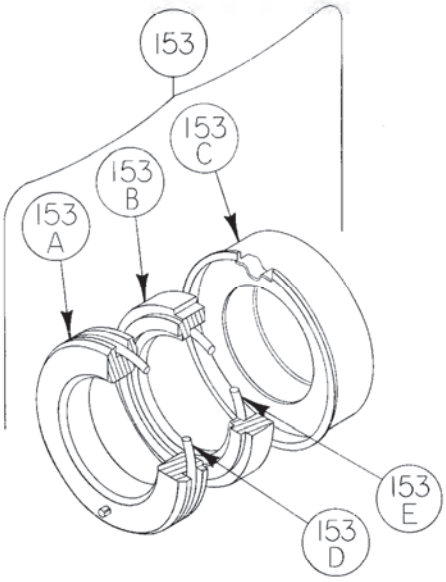

HYDRAULIC MOTOR ADAPTER PARTS

REF. NO.	PART NAME	PARTS PER PUMP	PART NO.
See Below	**Hydraulic Motor Adapter Kit** *	See Below	892037
26A	Gasket – Hydraulic Motor Adapter	1	381817
28A	Capscrew – Hydraulic Motor Adapter / Head	6	920369
34	Coupling w/ Setscrew – 1.25" straight key hyd. motor shaft	1	906970
35	Key – Coupling	1	909184
76	Grease Fitting	1	317815
76A	Grease Relief Fitting	1	701992
135	Hydraulic Motor Adapter – SAE A Flange	1	041829
135A	Capscrew – Adapter / Motor	2	920510

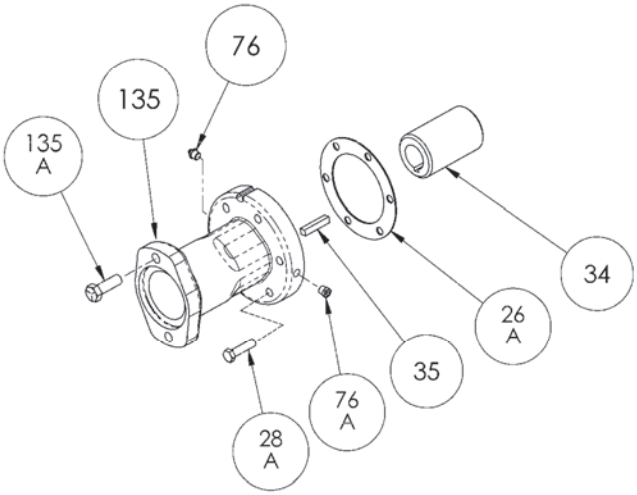

EBSRAY MODELS: RC20 & RC25

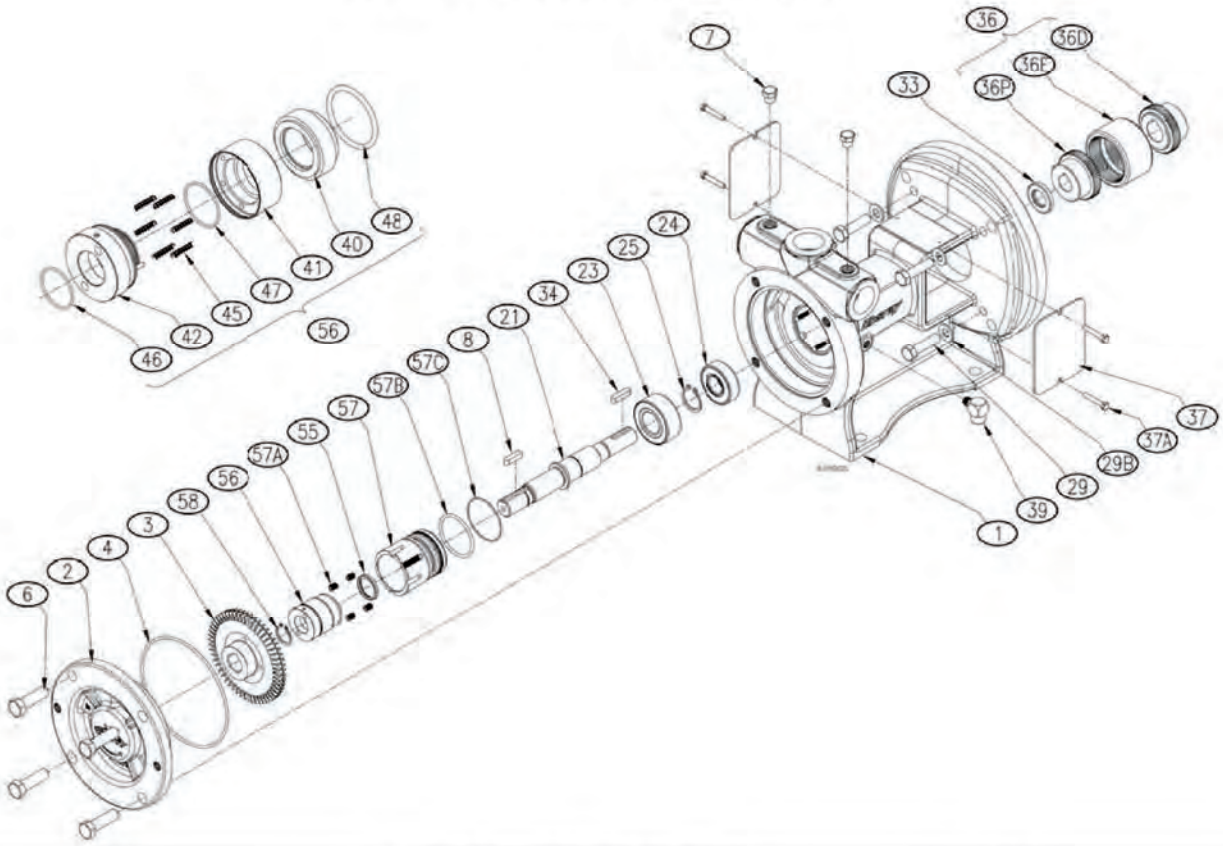

EBSRAY MODELS: RC40

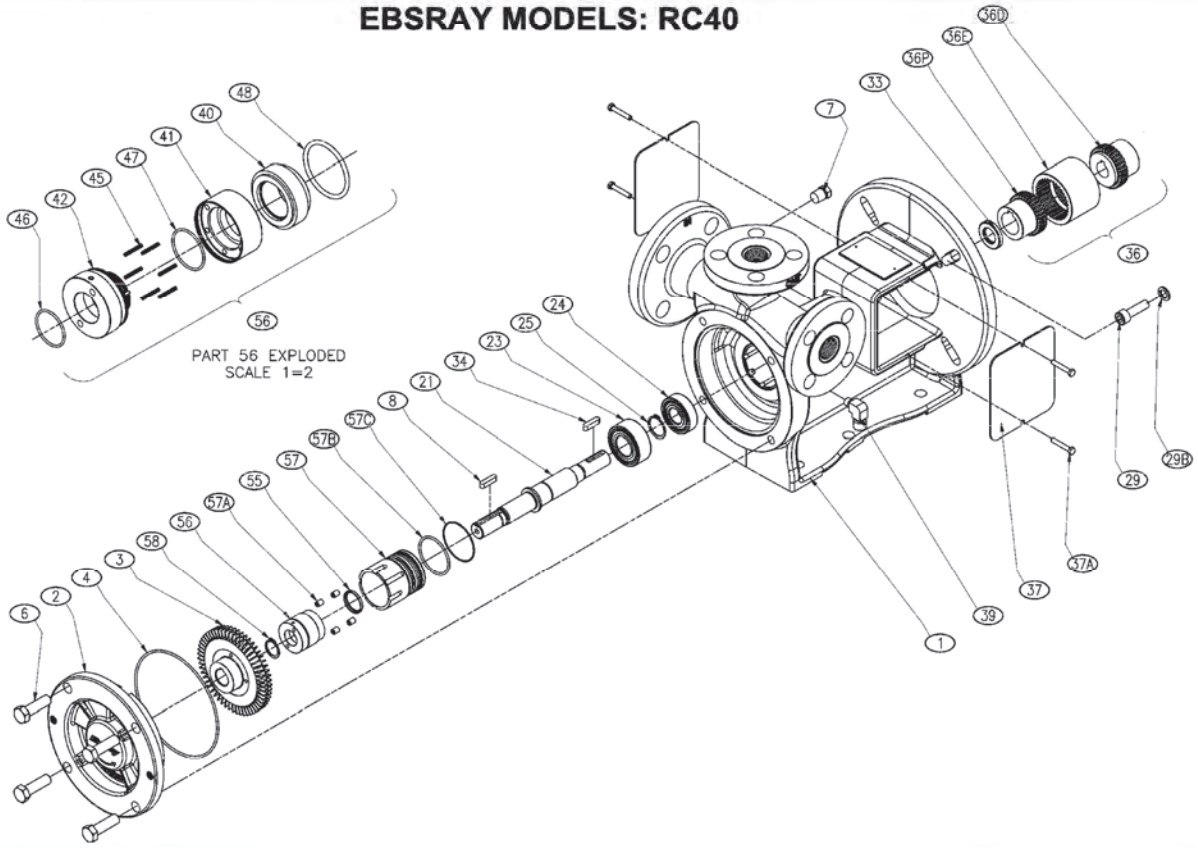

PARTS LIST – EBSRAY MODELS: RC20, RC25 & RC40

Cat #	Description	Qty	RC20	RC25	RC40
1	Body - NEMA	1	EBSC317002-1031	EBSC316003-1031	EBSC319001-1037
2	Cover	1	EBSC317200-1031	EBSC316200-1031	EBSC319200-1037
3	Impeller	1	EBSC317300-3012	EBSC316300-3012	EBSC319300-3012
4	O-Ring – Cover	1	EBSD249-4029		EBSD252-4029
6	Hex Head Capscrew, M12-1.75x40	4			
7	Plug –Gauge Tap	2	BLK908198		
8	Key – Impeller, Steel 6x6x20	1			
21	Shaft	1	[1]815702 - EBSC316350-2152		[1]EBSC319350-2152
23	Ball Bearing – Impeller End	1	[1] 815703 - EBSB072		
24	Ball Bearing – Motor End	1	[1] 815704 - EBSB073		
25	Circlip – Bearing	1	[1] 815705 - EBS8177-025S		
33	Dust Seal - Bearing	1	815706 - EBSZ044-4011		
34	Key – Pump Shaft, Steel 6x6x20	1			
36	Coupling Assembly - 0.875 Motor Shaft, NEMA 140TC, 184C	1	EBSL575-028-019-087		
	Coupling Assembly - 1.125 Motor Shaft, NEMA 180TC, 215C	1	EBSL575-028-019-306		EBSL575-038-019-306
	Coupling Assembly - 1.375 Motor Shaft, NEMA 213TC, 215TC	1			EBSL575-038-019-297
	#36D Half Coupling – 0.875 Motor Shaft	0-1			
	#36D Half Coupling – 1.125 Motor Shaft	0-1			
	#36D Half Coupling – 1.375 Motor Shaft	0-1			
	#36E Coupling Element	1			
	#36P Half Coupling – Pump	1			

37	Coupling Guard	2	EBSC316700-3081	EBSC319700-3081
37A	Hex Head Capscrew – Coupling Guard, M5-0.8x30	4		
39	Seal Drain Elbow	1	EBS-8312-012S	
55	Lip Seal - Secondary Seal	1	[1] EBSZ043-4015	
56	Mechanical Seal Assembly	1	[1] EBSL751-25-096-05	
40	Seal Seat	1	EBSC310009-4035	
41	Rotating Seal Face	1	EBSC316625-1043	
42	Seal Sleeve	1	EBSC316650-2162	
45	Seal Spring	6	EBSC753001-2223	
46	O-Ring – Shaft	1	EBSD020-4029	
47	O-Ring – Seal Sleeve	1	EBSD020-4029	
48	O-Ring – Seal Seat	1	EBSD218-4029	
57	Cartridge - Mechanical Seal	1	[1] EBSC316676-1035	
57A	Oval Point Setscrew, 1/4-28x0.375	4		
57B	O-Ring – Cartridge Primary	1	[1] EBSD224-4029	
57C	O-Ring – Cartridge Secondary	1	[1] EBSD032-4029	
58	Circlip - Mechanical Seal	1	[1] EBS8177-020S	
	Quill Assembly, All items marked [1]	1	EBSL316376	EBSL319376

- All items marked [1] are included in the Quill Assembly.

RC20/RC25

	Motor Attachment - NEMA 140TC, 184C	
29	Hex Head Capscrew - 0.375-16 x 1.50	4
29B	Spring Lock Washer - 0.375	4
	Motor Attachment - NEMA 180TC, 215C	
29	Hex Head Capscrew - 0.500-13 x 2.00	4
29B	Spring Lock Washer - 0.500	4

RC40

	Motor Attachment – NEMA 213TC/215TC	
29	Hex Head Capscrew – 0.500-13 x 2.00	4
29B	Spring Washer – 3/8" UNC	4

SPARE PARTS

1. When ordering spare parts, ***ALWAYS*** quote the pump Serial Number located on the nameplate of the pump.

Ebsray Pump Model	Flow at Maximum Differential Pressure	Ebsray Bypass Valve
RC20 50 Hz / 2 Pole	4 gpm at 152 psid Max (16 lpm at 1,050 kPa)	RV18CBS2
RC20 60 Hz / 2 Pole	5 gpm at 203 psid Max (19 lpm at 1,400 kPa)	RV18CBS2 or RV18VRS10
RC25 50 Hz / 2 Pole	8 gpm at 152 psid Max (31 lpm at 1,050 kPa)	RV18CBS2 or RV18VRS14
RC25 60 Hz / 2 Pole	15 gpm at 203 psid Max (56 lpm at 1,400 kPa)	RV18CBS2 or RV18VRS14
RC40 50 Hz / 2 Pole	25 gpm at 152 psid Max (95 lpm at 1,050 kPa)	RV18CBS3 or RV18VRS19
RC40 60 Hz / 2 Pole	35 gpm at 203 psid Max (132 lpm at 1,400 kPa)	RV18CBS3 or RV18VRS19

BLACKMER PARTS LIST
PUMP MODEL: TLGLF3C

Keep this parts list with Installation, Operation and Maintenance Instructions 501-D00

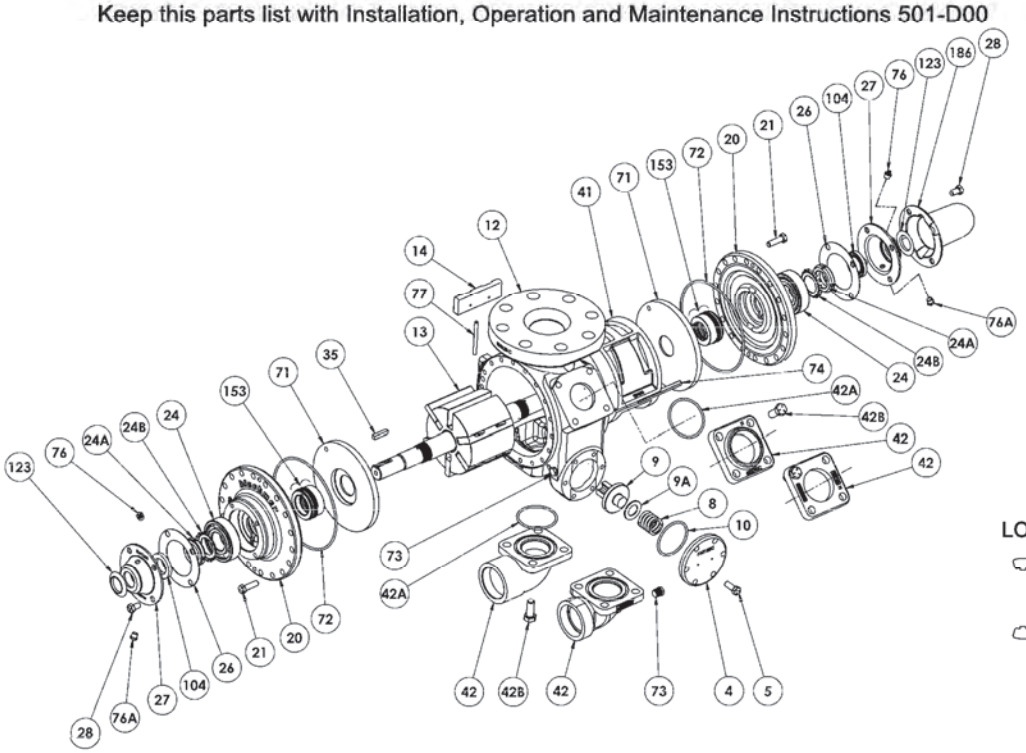

LOCKNUT TOOL

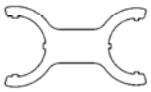

Ref. No.	Description	Parts Per Pump	Part No.
4	Cover - Relief Valve (R/V)	1	415108
5	Capscrew - R/V Cover	6	920331
8	Spring - R/V	1	[1] 471428
9	Valve - R/V	1	[4] 451460
9A	Relief Valve Shim, .035"	0-1	332907
	Relief Valve Shim, .075"		332937
10	O-Ring - R/V Cover	1	[1] 701919
12	Casing	1	015128
13	Rotor & Shaft Assembly [5]	1	[2] 265147
14	Vane - Duravane	6	[1] 095132
20	Head	2	035132
21	Capscrews - Head	36	920351
24	Ball Bearing	2	[1] 903156
24A	Locknut - Bearing	2	[2] 903521
24B	Lockwasher - Bearing	2	[1] 903522
26	Gasket - Bearing Cover	2	[1] 383940
27	Bearing Cover	2	041431
28	Capscrews - Bearing Cover	8	920285
35	Key – Shaft Current, .25 Sq.	1	[1] 909209
	Key – Shaft OBS, Woodruff		[1] 909130
41	Liner	1	[2] 185101

Ref. No.	Description	Parts Per Pump	Part No.
42	Flange - 2" NPT	1-2	652010
	Flange - 2" Slip-on Weld		652024
	Flanged Elbow - 2" NPT		655100
	Flanged El - 2" Socket Weld		655109
	Blank Flange for Auxiliary Inlet		652036
	Flange – 2" NPT Stainless		655200
	Flange – 2" Slip-on Weld Stainless		655209
	Flange – 2" Socket Weld El Stainless		655224
42A	O-Ring – Flange 2 5/8" x 2 7/8" (current)	2	[1,3] 702004
	O-Ring – Flange 2 1/2" x 2 3/4" (older pumps)		[1] 701919
42B	Capscrew - Flanges	8	920491
71	Disc	2	[1] 065121
72	O-Ring – Head	2	[1] 711923
73	Gage Plug	2	908198
74	Key - Liner	1	[2] 185193
76	Grease Fitting	2	317815
76A	Grease Relief Fitting	2	701992
77	Push Rod	3	[1] 121607
104	Grease Seal	2	[1] 331918
123	Dirt Shield	2	[1] 701480
186	Shaft Protector	1	341601
—	Tool - Locknut	—	903091
—	Kit – Maintenance	—	898980
—	Kit – Maintenance with R/V	—	899225
—	Kit – Rebuild	—	899080
—	Kit – Rebuild with R/V	—	899125

[1] Included in Maintenance Kit and Rebuild Kit [2] Included in Rebuild Kit
[3] Larger O-Ring introduced October 2002
[4] Additional parts Included in Kits with R/V [5] Includes Ref. No. 24A & 24B

MECHANICAL SEAL – NH_3 OR DUAL SERVICE – SNCN (ID Code = QA)

Ref. No.	Part Name	Parts Per Pump	Part No.
153	Mechanical Seal Assembly	2	[1] 334439
153A	Stationary Seat (Steel)	2	**
153B	Seal Face (Carbon)	2	**
153C	Jacket Assembly	2	**
153D	O-Ring - Stationary (Buna-N)	2	711924
153E	O-Ring - Rotating (Buna-N)	2	711918

[1] Included in Maintenance Kit and Rebuild Kit

** NOTE: Mechanical Seal Ref. No. 153 is only sold as a complete assembly. Ref. Nos. 153A, 153B & 153C are not available as separate replacement parts.

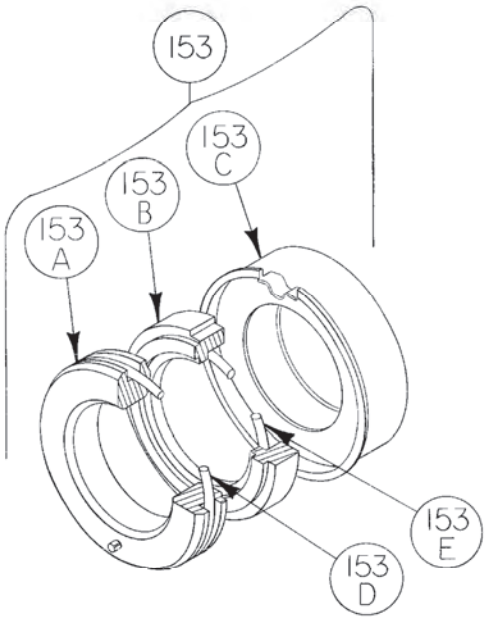

OPTIONAL HYDRAULIC MOTOR ADAPTER PARTS

REF. NO.	PART NAME	PARTS PER PUMP	PART NO. 1-¼" Hyd Motor Shaft	PART NO. 1" Hyd Motor Shaft .
See Below	**Hydraulic Motor Adapter Kit** *	See Below	891458	891205
26A	Gasket – Hydraulic Motor Adapter	1	383940	383940
28A	Capscrew – Hydraulic Motor Adapter / Head	4	920369	920369
34	Coupling w/ Setscrew – straight key hyd. motor shaft	1	906967	906966
35	Key – Coupling	1	909184	N/A
76	Grease Fitting	1	317815	317815
76A	Grease Relief Fitting	1	701992	701992
135	Hydraulic Motor Adapter – SAE A Flange	1	041828	041827
135A	Capscrew – Adapter / Motor	2	920510	920510

* Hydraulic Motor Adapter Kits shipped prior to Spring 2002 were a two two piece design – refer to page 206-C00.

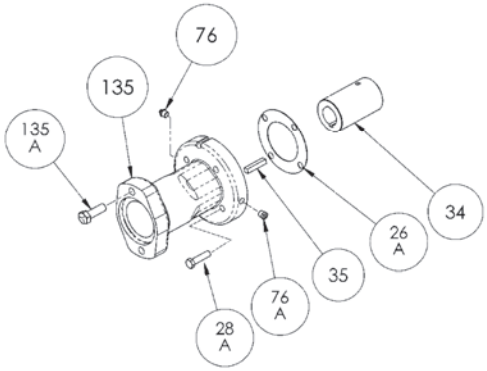

BLACKMER PARTS LIST
PUMP MODEL: TLGLF4B

TLGLF4 pump parts are no longer available. TLGLF4A or TLGLF4B are **NOT** interchangeable with the TLGLF4.

Keep with 501-E00 for Installation, Operation and Maintenance Instructions

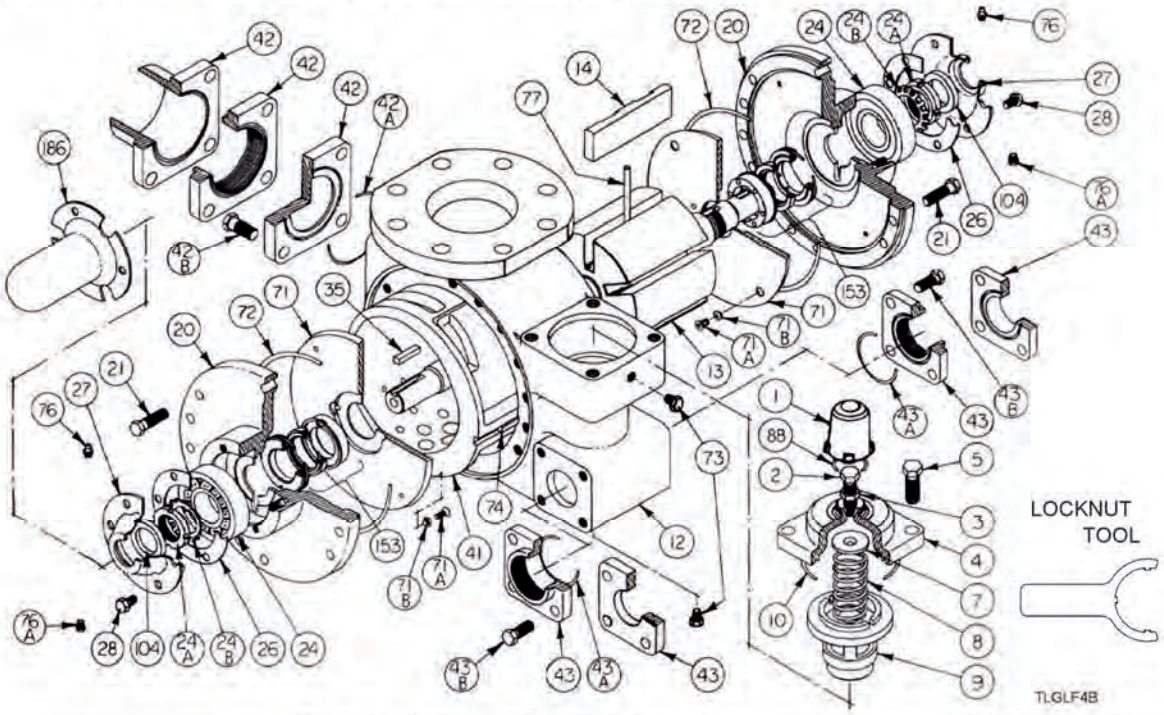

Ref. No.	Description	Parts Per Pump	Part No.
1	Cap - Relief Valve (R/V)	1	413957
2	Adjusting Screw - R/V	1	436310
3	Locknut - Adjusting Screw	1	432039
4	Cover - R/V	1	412001
5	Capscrews - R/V Cover	4	920663
7	Spring Guide - R/V	1	426355
8	Spring - R/V	1	[1] 472039
9	Valve - R/V	1	452001
10	O-Ring - R/V Cover	1	[1] 701946
12	Casing	1	012041
13	Rotor & Shaft Asy. (includes Ref. No. 24A & 24B)	1	[2] 262041
14	Vane - Duravane	6	[1] 092019
20	Head	2	032041
21	Capscrews - Head	28	920532
24	Ball Bearing	2	[1] 903166
24A	Locknut - Bearing	2	[2] 903541
24B	Lockwasher - Bearing	2	[1] 903542
26	Gasket - Bearing Cover	2	[1] 385125
27	Bearing Cover	2	041815
28	Capscrews - Bearing Cover	12	920285
35	Key - Shaft	1	[1] 909183
41	Liner	1	[2] 182000
	AUXILIARY INLET OPTIONS		
42	Flange - 3" NPT	1	652012
	Flange - 2" NPT		652030
	Flange - 4" Weld		652005
	Flange - 3" Weld		652007
	Flange - Blank		652000

Ref. No.	Description	Parts Per Pump	Part No.
42A	O-Ring – Aux. Inlet Flanges	1	701937
42B	Capscrew – 2", 3" NPT Flange	4	920663
	Capscrew - 3", 4" Weld Flange; Blank Flange		920640
	TWIN DISCHARGE PORT OPTIONS		
43	Flange - 2" NPT	2	652010
	Flange - 2" Slip-on Weld		652024
43A	O-Ring - 2" Discharge Flanges	2	[1] 702004
43B	Capscrew - Discharge Flange	8	920491
71	Disc	2	[1] 062039
71A	Machine Screw - Disc	8	[2] 920015
71B	Lockwasher - Machine Screw	8	[2] 909634
72	O-Ring - Head	2	[1] 702039
73	Gage Plug	2	908198
74	Key - Liner	1	[2] 182040
76	Grease Fitting	2	317815
76A	Grease Relief Fitting	2	701992
77	Push Rod - Composite	3	[1] 122009
88	O-Ring - R/V Cap	1	[1] 701926
104	Grease Seal	2	[1] 331908
186	Shaft, Protector	1	341801
	Tool - Locknut		903092
	Kit – Maintenance		898922
	Kit – Rebuild		899022

[1] Included in Maintenance Kit and Rebuild Kit [2] Included in Rebuild Kit

MECHANICAL SEAL

Ref. No.	Part Name	Parts Per Pump	Part No.
153	Mechanical Seal Assembly	2	[1] 332050
153A	Stationary Seat (Hardened Steel)	2	**
153B	Seal Face (Carbon)	2	**
153C	Jacket Assembly	2	**
153D	O-Ring - Stationary (Buna-N)	2	701934
153E	O-Ring - Rotating (Buna-N)	2	711912

[1] Included in Maintenance Kit and Rebuild Kit
** NOTE: Mechanical Seal Assy. (Ref. 153) is only sold as a complete assembly. Ref. Nos. 153A, 153B & 153C are not available as separate replacement parts.

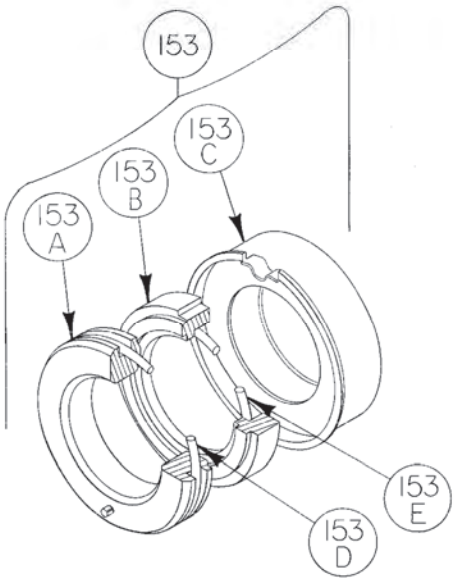

OPTIONAL HYDRAULIC MOTOR ADAPTER PARTS

Ref. No.	Part Name	Parts Per Pump	Part No.
See Below	**Hydraulic Motor Adapter Kit**	See Below	892037
26A	Gasket – Hydraulic Motor Adapter	1	381817
28A	Capscrew – Hydraulic Motor Adapter / Head	6	920369
34	Coupling w/ Setscrew – 1.25" straight key hyd. motor shaft	1	906970
35	Key – Coupling	1	909184
76	Grease Fitting	1	317815
76A	Grease Relief Fitting	1	701992
135	Hydraulic Motor Adapter – SAE A Flange	1	041829
135A	Capscrew – Adapter / Motor	2	920510

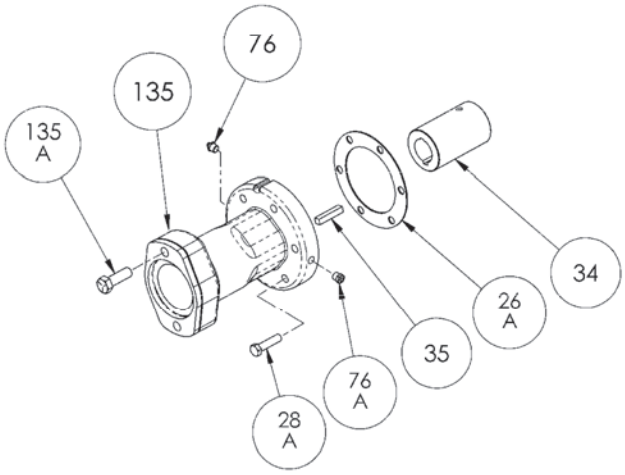

COMPRESSORS & EMERGENCY EVACUATION KIT

COMPRESSORS

BLACKMER OIL-FREE COMPRESSORS

Blackmer offers a variety of factory assembled compressor packages to fit most application requirements. Standard base mounted units are available in a variety of styles.

Item #	Approx. Liquid Transfer Rate	Motor Size
LB081	45 GPM @ 780 RPM	5 HP
LB161	90 GPM @ 780 RPM	7.5 HP
LB361	194 GPM @ 780 RPM	15 HP
LB601	351 GPM @ 790 RPM	25 HP
LB942	640 GPM @ 750 RPM	40 HP
LB943	680 GPM @ 800 RPM	50 HP

LB081 OIL-FREE RECIPROCATING GAS COMPRESSOR

Blackmer oil-free gas compressors deliver high efficiency in handling propane, butane, anhydrous ammonia and other liquefied gases. At about half the capacity of the Blackmer LB161, the LB081 is well suited to small plants or vessels. These compressors are designed to provide maximum performance and reliability under the most severe service conditions and offer the best combined characteristics of sustained high level performance, energy efficiency, trouble-free operation and low maintenance cost.

Applications

* Small tank unloading
* Portable evacuation skids
* Line stripping
* Vapor recovery

PORTABLE LIQUID TRANSFER, VAPOR RECOVERY SYSTEMS FROM BLACKMER

Custom skid mounted compressor units offer flexibility for transferring liquids in remote locations or emergency situations.

These units are customized to fit your specific needs.

Blackmer recommends the following oils for compressors:

Mineral Based Non-detergent
Mobile Rarus 427, ISO Grade 100, 46, 32, 22 or equivalent.

Synthetic Hydrocarbon Non-detergent
Mobile Rarus SHC1026, ISO Grade 100, 46, 32, 22 or equivalent.

KRUG VAPOR COMPRESSORS

- Has LP Gas fueled engine (uses LP being transferred as fuel)
- 20 GPM transfer rate
- 1/2" FNPT connections

Item #	Description
K-VP-HK	Connecting hose kit
K-VP-HK-100	100' Krug Hose Kit
K-VP-HK-50	50' Krug Hose Kit
K25459B	Replacement Compressor
K488-25274	Krug compressor seal kit
K209870	3/4" replacement clutch
K3X927	Replacement pulley
K-VP-LPH	Compressor with Lauson gas engine

*K4L390 Drive Belt
*Uses 30 wt non-detergent oil

KRUG HAND PUMP

Operates on the simple principle of the automotive piston. Used for filling 20# cylinders, lift truck cylinders, etc.
Inlet: 1" FNPT
Outlet: 3/4" FNPT
Capacity: 6 GPM at 40 strokes/min.

Item #	Description
KHP	Hand pump
K-HP-HK	Connecting hose kit

EMERGENCY EVACUATION KIT

VENTUR-EVAC

The VENTUR-EVAC is a Tank Evacuation Assembly that allows you to use a bobtail to easily evacuate LP tanks.

- Reduce liquid & vapor hose requirements by 50%
- One person, one truck operation reduces tank evacuation labor costs
- Evacuation flow rate of 11 to 16 GPM
- Weighs only 6 pounds
- FAST and EASY hookup reduces connection and take down time
- the VENTUR-EVAC fits easily into a truck mounted tool box

EVACHOSEKIT

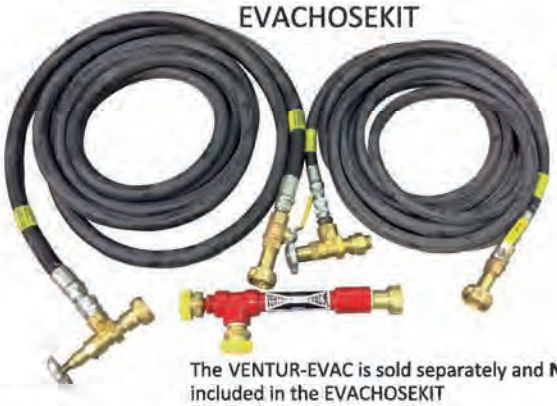

The VENTUR-EVAC is sold separately and **NOT** included in the EVACHOSEKIT

Hose Kit for VENTURE-EVAC assembly. INCLUDES 25 FT LIQUID AND VAPOR HOSE ASSEMBLIES
- Includes 25' liquid and vapor hose assemblies
- Contains liquid and vapor side connections

ME612 Adapter

3-1/4" F ACME x 1-3/4" M ACME adapter

Optional

MOTOR SWITCHES

KECF212 EXPLOSION PROOF FLEXIBLE CONNECTOR

For connecting wiring to motor on a pump unit so motor can be adjusted 3/4" x 12"

B800H-2HA7 REMOTE PUSH BUTTON STATION

Provides remote operation of magnetic starters
Class 1, Group D (60 Cycle) NEMA Type 3R, 7 and 9

KXS52C OFF/ON SWITCH

For use with 1 and 1-1/2 HP explosion proof motors.
Class 1, Group D (60 Cycle) NEMA Type 3R, 7 and 9

K1222

Toggle switch only for KXS52C.

B800-TFX

Emergency Electrical Kill Switch. Die cast weather resistant enclosure, NEMA 4 rated. Large red mushroom head switch, push to close. Switch head has "E-STOP" printed in large letters.

ELECTRICAL SEAL-OFF

AC1F01A ELECTRICAL SEALING KIT

Kit includes everything needed to seal up to 16 electrical sealing fittings. Includes 1 oz bag of fiber material for creating a cement dam, and a 16 oz can of sealing compound premixed and ready to pour.

OUNCES REQUIRED PER FITTING		
HUB SIZE	SEALING COMPOUND	PACKING FIBER
1/2"	1.0 oz.	1/16 oz.
3/4"	2.0 oz.	1/8 oz.
1"	4.5 oz.	1/4 oz.

(For Vertical Conduit)

EY SEALING FITTINGS				
HUB SIZE	PART #	DIMENSIONS		TURNING RADIUS
	KILLARK ALUMINUM	A	B	
1/2"	EY-1	3-1/16"(78)	2-3/4"(70)	2-1/4"(57)
3/4"	EY-2	3-1/16"(78)	2-3/4"(70)	2-1/4"(57)
1"	EY-3	4-9/32"(109)	3-1/8"(79)	2-3/8"(60)

FEATURES-SPECIFICATIONS

Material/Finish
Copper-free Aluminum
(less than 4/10 of 1%)

EY & EYD Series
Class I, Div. 1 & 2, Groups C, D
Class I, Zone 1, Groups IIB, IIA
Class II, Div. 1 & 2, Groups E, F, G
Class III

File No. E10514
Certified File No. LR11716
See files for details or call Killark.

Dimensions

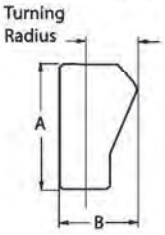

EY Series

The purpose of seals in a Class I hazardous location is to minimize the passage of gases and vapors and prevent the passage of flames from one electrical installation to another through the conduit system. Seals are required to be installed within 18 inches on any conduit run entering an enclosure which contains devices that may produce arcs, sparks, or high temperature. Where two enclosures are connected by a run of conduit not over 3 ft. long, a single seal located at the center of the run is considered satisfactory. Only explosion-proof unions, couplings, elbows, and conduit bodies similar to "L", "T", and "X" type shall be permitted between the sealing fitting and the enclosure.

Motor Starter Selection Guide

The following guide will help in selecting the proper starter for your motor. The starter and heater pairings listed below are based on our stock motors. If you have a motor from a different source, please verify the Full Load Amperage (**FLA**) for the motor listed for the voltage you are using. If this value matches the motors we provide, then the same starter and heaters can be used. If not, please see the heater table specified for the desired starter, and find the proper heater based on the FLA of your motor.

Explosion Proof Motors

Wiring Diagram for AXPD010C1M and AXPD015C1M motors

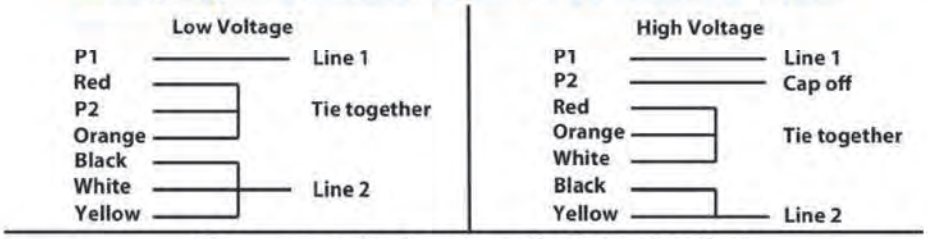

*** To reverse rotation, interchange the Black and Red leads**

*** FLA = Full Load Amperage**

Class I, Group D – 60 HZ – 1750 RPM

Part Number	HP	Phase	Voltage	FLA 230V	FLA 460V	Frame Size	Frame Type	RPM
AXP020T3B	2	3	230/460	6.2	3	145T	Rigid	1800
AXP030T3B	3	3	230/460	9	4.2	182T	Rigid	1800
AXP030C3B	3	3	230/460	9	4.2	184C	C Face	1800
**C303B	3	3	230/460	7.4	3.7	182TC	C Face	3600
**C304B	5	3	230/460	12.4	6.2	182TC	C Face	3600
AXP050T3B	5	3	230/460	13	6.5	184T	Rigid	1800
AXP050C3B	5	3	230/460	13	6.5	215C	C Face	1800
AXP075T3B	7.5	3	230/460	20	10	213T	Rigid	1800
AXP100T3B	10	3	230/460	26	13	215T	Rigid	1800
AXP150T3B	15	3	230/460	39	19.5	254T	Rigid	1800
AXP200T3B	20	3	230/460	50	25	256T	Rigid	1800
AXP250T3B	25	3	230/460	62	31	284T	Rigid	1800
Part Number	**HP**	**Phase**	**Voltage**	**FLA 115V**	**FLA 230V**	**Frame Size**	**Frame Type**	**RPM**
*APD010C1M	1	1	115/208/230	13	6.5	56C	C Face	1800
*APD015C1M	1.5	1	115/208/230	16	8	56C	C Face	1800
AXPB02T1B	2	1	115/230	22	11	184T	Rigid	1800
9293306	2	1	115/230	22	11	184C	C Face	1800
AXPB03T1B	3	1	115/230	30	15	215T	Rigid	1800
**929007	3	1	208/230	29	15	184TC	C Face	3600
**929008	5	1	208/230	-	19.5	184TC	C Face	3600
929941	5	1	230	-	21	215T	Rigid	1800
929943	5	1	208/230	-	21	215C	C Fae	1800

**These motors are equipped with internal overload circuits, and do not require a starter*

***These motors are intended for use with the Ebsray high differential pumps*

3 Phase Motor Starter Selection

STARTERS – 3 PHASE

All starters are Type R, 7, & 9 - Class I C & D - Class II E, F, & G - Division 1 & 2.
3 Phase starters require 3 heater overload units for operation.

B509 Series

Magnetic Starters – B509 Series						
HP	230 Volt Operation			460 Volt Operation		
	NEMA Size	Model	Heater	NEMA Size	Model	Heater
2	0	B509-AHA-1	W47	0	B509-AHB-1	W39
3	0	B509-AHA-1	W51	0	B509-AHB-1	W43
5	1	B509-BHA-1	W55	0	B509-AHB-1	W47
7.5	1	B509-BHA-1	W61	1	B509-BHB-1	W52
10	2	B509-CHA-1	W63	1	B509-BHB-1	W55
15	2	B509-CHA-1	W67	2	B509-CHB-1	W59
20	3	B509-DHA-1	W69	2	B509-CHB-1	W62
25	3	B509-DHA-1	W72	2	B509-CHB-1	W65

Magnetic starters are stocked for 230/460 volt operation. Optional coils can be ordered to change this configuration in the field, however **coils are non-returnable**.

Optional Coils:

CB249 - 208V 60Hz control coil for B509 Series magnetic starters. NEMA sizes 0 and 1.
CC249 - 208V 60Hz control coil for B509 Series magnetic starters. NEMA sizes 2.
CD249 - 208V 60Hz control coil for B509 Series magnetic starters. NEMA sizes 3.

All starters are Type R, 7, & 9 - Class I C & D - Class II E, F, & G - Division 1 & 2.
3 Phase starters require 3 heater overload units for operation.

B609 Series

Manual Starters – B609 Series						
HP	230 Volt Operation			460 Volt Operation		
	NEMA Size	Model	Heater	NEMA Size	Model	Heater
2	0	B609-AHW	W46	0	B609-AHW	W38
3	0	B609-AHW	W50	0	B609-AHW	W42
5	1	B609-BHW	W54	0	B609-AHW	W46
7.5	1	B609-BHW	W59	1	B609-BHW	W51
10	-----	-----	-----	1	B609-BHW	W54
15	-----	-----	-----	-----	-----	-----
20	-----	-----	-----	-----	-----	-----
25	-----	-----	-----	-----	-----	-----

Single Phase Motor Starter Selection

STARTERS – SINGLE PHASE

All starters are Type R, 7, & 9 - Class I C & D - Class II E, F, & G - Division 1 & 2.
Single Phase starters require 1 heater overload unit for operation.

Magnetic Starters – B509 Series						
HP	115 Volt Operation			230 Volt Operation		
	NEMA Size	Model	Heater	NEMA Size	Model	Heater
2	1	B509-BHXD-1	W60	0	B509-AHXA-1	W52
3	1P	B509-XHXD-1	W63	1	B509-BHXA-1	W55
5	-----	-----	-----	1P	B509-XHXA-1	W59

B509 Series

Magnetic starters ar stocked for 230/460 volt operation. Optional coils can be ordered to change this configuration in the field, however **coils are non-returnable**.

Optional Coils

CB249 - 208V 60Hz control coil for B509 series magnetic starters. NEMA sizes 0 and 1.

CC249 - 208V 60Hz control coil for B509 series magnetic starters. NEMA sizes 2.

CD249 - 208V 60Hz control coil for B509 series magnetic starters. NEMA sizes 3.

STARTERS – SINGLE PHASE

B609 Series

All starters are Type R, 7, & 9 - Class I C & D - Class II E, F, & G - Division 1 & 2.
Single Phase starters require 1 heater overload unit for operation.

Manual Starters – B609 Series						
HP	115 Volt Operation			230 Volt Operation		
	NEMA Size	Model	Heater	NEMA Size		Heater
2	1	B609-BHX	W59	0		W51
3	1P	B609-XHX	W62	1		W54
5	-----	-----	-----	1P		W58

ASKW SERIES

RADIO REMOTE FUELING CONTROLS

Up to 8 channels of bulletproof control. The industry standard in petrochemical applications including propane bobtails and refined fuels trucks. Range up to 1000 feet and battery life over 300 hours continuous transmission. Complies with US and Canadian DOT requirements for "Off Truck Remote Shut Off".

PROCONTROL 2

REMOTE READOUT with RFID

Up to 9 channels of control with remote meter display and with RFID reader capability. Used primarily in the petrochemical industry for fleet refueling and home delivery trucks where pump and volume control is critical. Up to 1000 feet range, increases safety and reduces spill risk.

EMERGENCY SHUTDOWN

BULK FUEL PLANT

WIRELESS EMERGENCY SHUTDOWN:

Wireless Emergency Shutoff system for bulk plant and industrial facilities. Eliminates expensive wiring, conduit, and labor needed to connect hard-wired shutoff switches. Includes test mode, low battery warning and optional solar charging.

LPG DISPENSER/ AUTOGAS STATION

WIRELESS EMERGENCY STOP

Designed specifically for LPG Dispenser and Autogas facilities by the world leading experts in LPG Wireless Emergency Stop Systems. ATEX and IECEx approved for use in Zone 0 Hazardous environments.

ASKW SERIES

RADIO REMOTE FUELING CONTROLS: Up to 8 channels of bulletproof control. The industry standard in petrochemical applications including propane bobtails and refined fuels trucks. Range up to 1000 feet and battery life over 300 hours continuous transmission. Complies with US and Canadian DOT requirements for "Off Truck Remote Shut Off".

NEW PRODUCT

BASESTATION

ONBOARD COMPUTER

AN INTUITIVE ONBOARD COMPUTER THAT AUTOMATES AND STREAMLINES THE FUELING PROCESS. FROM BACK OFFICE REPORTING TO INVENTORY MANAGEMENT

WIRELESS DEADMAN SWITCH

RADIO REMOTE FUELING CONTROLS

Our wireless deadman system utilizes spread-spectrum, frequency-hopping radio technology that virtually eliminates interference-related signal loss. Up to twelve functions can be specified providing hose-end control of the deadman valve, hose reel, PTO, engine RPM, pump, meter and other truck equipment.

CRANE SERVICE TRUCK

PROPORTIONAL HYDRAULIC RADIO REMOTE CONTROLS

Variable speed toggle switch control. Features high/low range selector for precision movement. Up to 12 control functions with PWM interface to hydraulic system. Rechargeable batteries and range to 2000 feet.

CRANE SERVICE TRUCK

NON-PROPORTIONAL HYDRAULIC RADIO REMOTE CONTROLS

Up to 12 channels of On / Off control. Used on electric or hydraulic service trucks, cranes and other applications requiring interference-free control. Features rechargeable batteries, serial communication and up to 2000 feet range.

TRANSPORT LEAK DETECTION

DCE CERTIFIED 'PASSIVE' SYSTEM

An automatic leak detection and shut down system for LPG, Anhydrous Ammonia and Butane bulk transports. Trailer mounted unit monitors the off-loading process for broken or damaged hoses, fittings and piping. System complies with US and Canadian DOT Requirements for "Passive" Shut Off equipment.

BASELINK

WIRELESS DATA TRANSMISSION

Ideal for industrial applications where cabling is not practical. Low powered, compact, and completely weather proof, these radio data links open up a world of machine to machine communication options.

DRIVER AUTHORIZATION SYSTEM

BULK TRUCK THEFT PREVENTION

BASE Engineering's Driver Authorization System is designed specifically for Bulk Fuel Delivery Trucks. The system prevents unauthorized vehicle drive-away with or without engine running.

CAS1000

Leather carrying case for handheld remote.

Base systems have a 4 year manufacturers warranty.
Base parts have a 1 year factory warranty.

BASE ENGINEERING INC.
FUEL TRANSFER AUTOMATION

METERS

E4000 - NEPTUNE ELECTRONIC REGISTER

Replace your Bobtail's Neptune or Veeder-Root mechanical register with this easy to use electronic register.

- To install an E4000 on a 1 1/2" Neptune meter, use a 201072-001 1 1/2" adaptor plate.
- To install an E4000 on a LC meter, add:

1000678	Kit
LC499988	Strainer cover
LC81256	Thermowell
LC06854	O-ring

TM-U295-071 EPSON SLIP PRINTER

RL100508A1VA (NEPTUNE) 90028-101 (LIQUA-TECH) 1" LIQUID PROPANE METER

Designed for metering small quantities of liquid propane into portable containers and engine fuel tanks. Complete with strainer, vapor eliminator, & differential valves.
Flow Range: 3 to 18 gpm.

NEPTUNE E1000 REGISTER FOR DISPENSERS

Replaces 90028-101 mechanical register.
*Battery powered

VEEDER-ROOT PRINTING REGISTER

Replace your Neptune register with a long lasting Veeder-Root Register

ITEM#	DESCRIPTION
L789002-002	Printing Register - Veeder Root
L788700-036	Non-Printing Register, Veeder Root, 1/10th gallon
L788700-039	Non-Printing Register, Veeder Root, whole gallon
L886201-001	Adaptor to fit 1 1/4" to 2" Neptune without ATC
L886205-001	Adaptor to fit 1 1/4" to 2" Neptune with ATC
L312020-905	10:1 Pulser - Veeder Root

833-ORM REMANUFACTURED SCHLUMBERGER/NEPTUNE 833 PRINTER REGISTER

1 Year ***or*** 1 Million Gallon warranty (whichever comes first). Rebuilt 833 registers provide you with the same quality measurement and reliability that you have grown accustom to! Totally rebuilt, reconditioned and repainted units. All parts are inspected and any defect will be completely corrected.

METERS (CONTINUED)

M250TC METRIS VAPOR METER

This 3/4" meter will meter 400,000 BTU at 11" W.C. and up to 1,200,000 BTU of 5 psig inlet pressure (max.). It has a direct read CFU index. 3/4" connections. Larger sizes are available.

M250TC is Temperature Compensated c/w Direct Read Index. Choices of connection are 20-LT with 3/4" npt straight swivels or 20-LT with 3/4" npt ninety degree swivels.

M015664 Replacement gasket for 3/4" swivel connection.

400ATC is Temperature Compensated c/w Direct Read Index. Choices of connection are 30-LT with 1 1/4" npt straight swivels or 45-LT with 1 1/2" npt straight swivels.

Inlet Pressure	M250TC SCFH Nat. Gas	M250TC btu p/h propane	400ATC SCFH Nat. Gas	400ATC btu p/h propane
11"wc	250@7"wc	968,000	400@7"wc	1,300,000
2psi	660	1,040,000	930	1,475,000
5psi	750	1,190,000	1,055	1,670,000
10psi	950 (HP)	1,500,00 (HP)	1,255	1,990,000
15psi			1,440 (HP)	2,285,000 (HP)
20psi			1,620 (HP)	2,570,000 (HP)
25psi			1,795 (HP)	2,840,000 (HP)

** HP (High Pressure) meters are available by special order only.*

PRESSURE CORRECTION FACTORS

To Compensate for over 11" wc Pressure
First multiply reading by 100 & then

Pressure	Multiply
2 psi	x 1.113
5 psi	x 1.317
10 psi	x 1.656
15 psi	x 1.996
20 psi	x 2.335
25 psi	x 2.675

Note: This chart is a general guideline
To convert SCFH reading to Gallons Per Hour LP divide by 36.39

METER SEALS

Item #	Description
163-057-510S	18" Seal Wire with lead seals

NEPTUNE CORIOLIS MASS FLOW LIQUID METERS

For bulk plants and bobtails. The Coriolis reduces LP Gas under-measurement, and compared to traditional mechanical flow meters, the Coriolis offers better accuracy with higher flow rates over a longer service life. When combined with the Neptune E4000 Register, the Coriolis allows an upgrade path not obtainable with competitive electronic transaction management systems. Features electronic temperature compensation and the availability of combining with hand helds. Available in sizes from 12 - 70 GPM.

LPM-102 REPAIR KITS

Liqua-Tech

L087188-001
VALVE ASSEMBLY WITH FLOAT KIT

QTY.	Description	Part Number
1 Float Only	3/4", 1" Vapor Eliminator	L087189-001
1 Vapor Return Valve Only	3/4", 1" Vapor Eliminator	L087190-001
1 Cotter Pin		L041403-000

L087190-102
VAPOR ELIMINATION UPGRADE KIT

QTY.	Description	Part Number
1	Rego Vent Valve	L003165-000
1	Flange Cover for Vent Valve	L087179-711
1	Vapor Return - Valve only 3/4", 1", Type B	L087190-010
1	Flange Seal, 3/4"	L100139-007
1	1/16" x 1", S.S. Cotter Pin	L041403-000

L090028-GIT
INTERNAL REBUILD KIT

QTY.	Description	Part Number
1 Measuring Chamber	3/4", 1", Type 4D	L042075-101
1 Valve Assembly with Float	3/4", 1", Vapor Eliminator	L100028-011
1 Gear Train	43.5 Ratio, 1 US Gallon Standard Spindle	L080905-017
1 Strainer	1", 120 Mesh, New Style	L101738-002
1 Differential Valve Kit	3/4", Soft Seat	L100028-011
3 Flange Seal	3/4"	L100139-007
1 Gasket	Vapor Eliminator, 1/8"x3 1/4"	L100139-012
1 Magnet	Strainer	L101738-101

LPM-102 METER REPAIR KITS

L101738-200 STRAINER/ DIFFERENTIAL VALVE PULLER 3/4"

Description	Part #
1 Strainer Puller Tool	L101738-201
1 Differential Valve Puller Kit	L100028-100

L090028-011
DIFFERENTIAL VALVE ASSEMBLY KIT

QTY.	Description	Part Number
2 U-Cup	Differential Valve, Extra Low Friction, 3/4"	L100025-008
1 O-Ring	Differential Valve, Soft Seat (Buna) 3/4"	L100025-101
1 O-Ring	Differential Valve, Soft Seat, (Viton) 3/4"	L100025-102
1 O-Ring	Seal, Differential Valve Sleeve, 3/4"	L100139-006
1 Differential Valve Only	3/4" Sleeve	L100027-010
1 Piston	Aluminum, 3/4" (Brass)	L100160-040
1 Differential Valve Retainer	3/4" (Brass)	L100160-050
1 Spring	3/4" Differential Valve	L100024-001
1 Flange Seal	3/4"	L100139-007
1 Screw	10-32 x 1/2" Buttonhead S.S.	L041750-010

L100028-050
DIFFERENTIAL VALVE SEAL KIT

QTY.	Description	Part Number
2 U-Cup	Differential Valve, Extra Low Friction, 3/4"	L100025-008
1 O-Ring	Differential Valve, Soft Seat (Buna) 3/4"	L100025-101
1 O-Ring	Differential Valve, Soft Seat, (Viton) 3/4"	L100025-102
1 O-Ring	Seal, Differential Valve Sleeve, 3/4"	L100139-006

L100139-102
SEAL KIT, FLANGES

QTY.	Description	Part Number
4 Flange Seal	3/4"	L100139-007
1 Gasket	Vapor Eliminator, 1/8"x3 1/4"	L100139-112
1 Main Case Gasket	3/4"	L004861-016
1 O-Ring	Gear Train, (Buna-N)	L100138-003
1 U-Cup Seal	Gear Train, (Buna-N)	L100025-002

LPM-102 Parts List

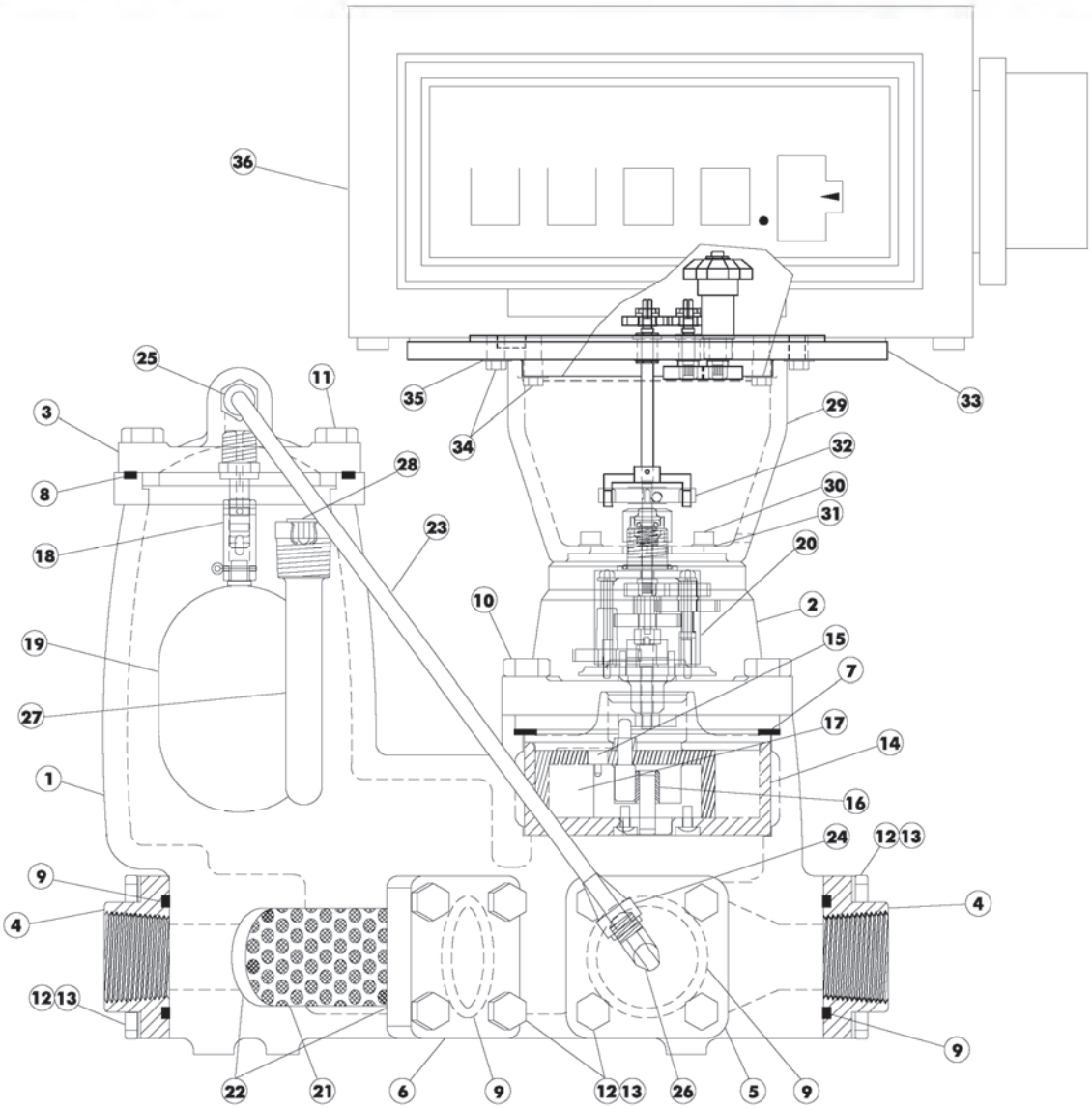

Ref.	Description	Part Number
1	Main case housing	L400027-001
2	Cover, main case	L087173-710
3	Cover, vapor eliminator	L087193-710
4	¾" Flange inlet/outlet	L087180-710
	1" Flange inlet/outlet	L087180-711
5	Flange, differential valve	L087179-710
6	Flange, strainer	L400025-001
7	Gasket, main case	L004861-016
8	O-ring, vapor eliminator flange	L100139-012
9	O-ring, inlet/outlet flange	L100139-007
10	Bolt, hex head, 7/16" NC x 1¼", drilled	L040237-005
	Bolt, hex head, 7/16" NC x 1¼", undrilled	L040237-004
11	Bolt, hex head, 3/8"-16 NC x 1"	L100067-027
12	Bolt, hex head, 5/16" NC x 1"	L100063-026
13	Lock washer, split 5/16"	L100121-010
14	Measuring chamber, LP-gas, standard	L042075-101
	Measuring chamber, LP-gas, *Trac-Bearing®*	L042075-501
	15 Seal pin	L042792-000
	16 Roller control	L042086-010
	17 Diaphragm	L042791-000
18	Vapor return valve	L087190-000

Ref.	Description	Part Number
19	Float	L087189-001
20	Gear train, 43.5 ratio, U.S. gallons	L080905-017
	Gear train, 11.6 ratio, liters	L080905-015
21	Strainer assembly, 120 mesh	L101738-002
	22 O-ring, strainer endcaps	L100139-006
23	Tube assembly, vapor release	L087196-001
	24 Nut, flared, 1/4" tube	L087198-000
25	Male connector, 1/8" NPT x 1/4" tube	L084826-100
26	90° elbow, 1/8" NPT X 1/4" tube	L087195-000
27	Thermowell assembly	L086666-702
	28 Cover, thermowell	L083732-000
29	Register adapter tower	L886150-000
30	Screw, 10-32 x 3/8", socket cap	L088524-010
31	Lock washer, split, #10	L041211-000
32	Star drive, w/set screw	L082976-001
33	Register gear plate adapter, no ATC	L886101-001
34	Cap screw, plated, 1/4"-28 x 5/8", undrilled	L100061-100
	Cap screw, plated, 1/4"-28 x 5/8", drilled	L100061-101
35	Lock washer, external, 1/4"	L100123-100
36	Register, non-printing, Veeder-Root	788700
	Register, printing, Veeder-Root	789002

LPM-102 Parts List

Automatic Temperature Compensator

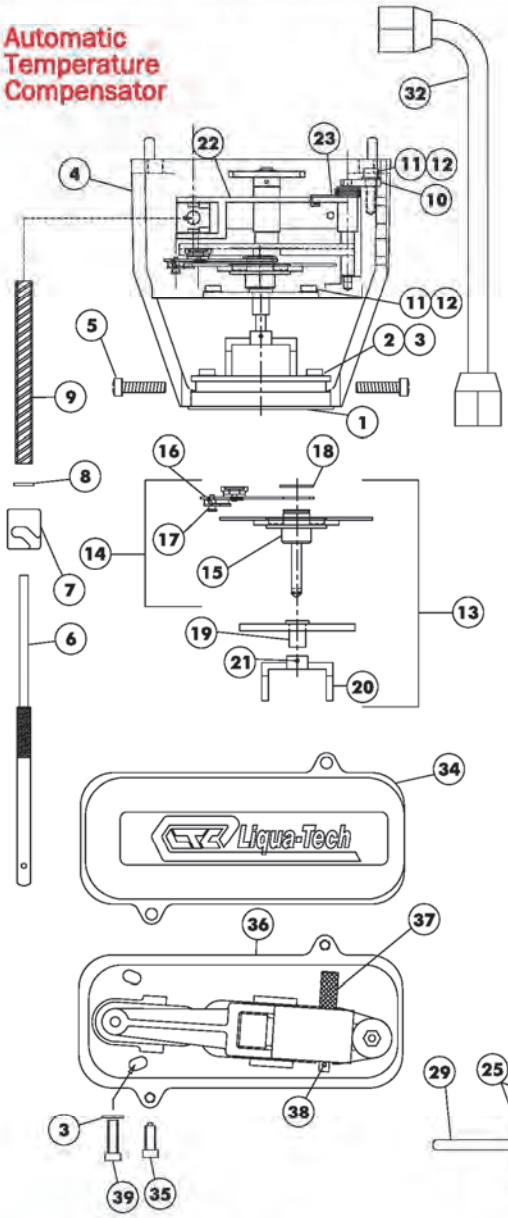

Ref.	Description	Part Number
	ATC Complete, LPM-102	L101080-005
1	Adapter mounting ring, ATC	L101052-001
2	Screw, fillister head 10-32 x 3/4", S.S.	L041750-000
3	Lock washer, split, #10	L041211-000
4	Housing assembly, ATC	L101047-001
5	Screw, fillister head 10-32 x 3/4", undrilled	L041750-000
	Screw, fillister head 10-32 x 3/4", drilled	L041750-002
6	Push rod, ATC	L101059-001
7	Swivel block assembly, all ATC 'S	L086612-000
8	Spacer, spring retainer, all ATC 'S	L088286-003
9	Spring, push rod	L084888-001
10	Plate, offset arm support	L101060-001
11	Screw, 10-32 x 3/8" socket buttonhead	L041750-008
12	Lock washer, internal, #10	L100122-007
13	Lower drive bracket complete, 1" ATC	L084913-000
	14 Ratchet wheel assembly w/arms, ATC	L084916-000
	14 15 Ratchet wheel and shaft assembly, ATC	L084917-000
	14 16 Ratchet arm set (1,2,33,44)	L086055-000
	14 16 Ratchet arm assembly, #1	L086057-001
	14 16 Ratchet arm assembly, #2	L086064-001
	14 16 Ratchet arm assembly, #33	L086637-001
	14 16 Ratchet arm assembly, #44	L086639-001
	14 17 Spring, ratchet pawl, ATC	L086063-000
	14 18 Retaining ring, 1/2" extension	L086071-000
	19 Plate drive assembly, ATC	L101055-001
	20 Drive fork (long)	L084192-006
	21 Roll pin, 1/16" x 3/8", steel	L100370-003
22	Arm complete, offset spider	L084910-004
23	Spring, offset spider, ATC	L008355-506
24	Thermostat cover, ATC	L087179-001
25	Screw, socket head, 1/4"-20 x 3/4"	L008325-401
26	Thermostat housing, ATC	L101048-001
27	Screw, button head, 1/4"-20 x 5/8", S.S.	L008325-020
28	Lock washer, 1/4", split	L041117-000
29	Thermostat pin, ATC	L086648-006
30	Thermostat bellows assembly	L086646-000
31	O-ring, thermostat	L100139-005
32	Connecting tube, LPM-102, ATC	L101065-001
33	Elbow, 3/8" NPT x 3/8" SAE	L084825-000
34	Cover, lever arm mounting plate	L086665-000
35	Screw, cover, 10-32 x 3/4", special, drilled	L009287-003
36	Lever arm assembly & mounting plate	L086649-003
37	Pin, lever arm lock	L086661-001
38	Cotter pin, 1/16" x 3/8", S.S.	L041401-000
39	Screw, fillister head, 10-32 x 5/8", steel	L041221-002

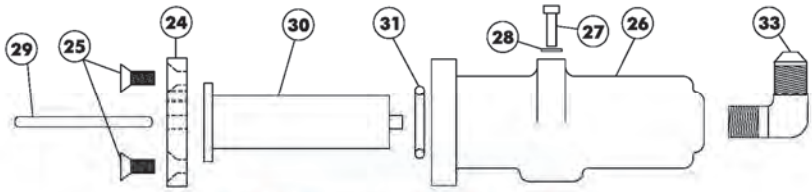

Stuffing Box Assembly

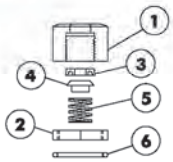

Ref.	Description	Part Number
1	Nut, stuffing box, complete, w/bushing	L083536-000
2	Clamp nut	L000034-000
3	U-cup seal (buna-n)	L100025-002
4	U-cup expander	L083539-000
5	Spring, stuffing box	L083540-000
6	O-ring, gear train, (buna)	L100138-003

Differential Valve Assembly

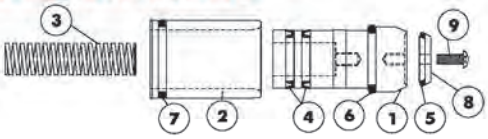

Ref.	Description	Part Number
	Differential valve assembly, soft seat	L100028-011
1	Piston, differential valve	L100160-040
2	Sleeve, differential valve	L100027-010
3	Spring, differential valve	L100024-001
4	U-cup seals, extra low friction (2)	L100025-008
5	O-ring, secondary, soft seat (viton)	L100025-102
6	O-ring, primary, soft seat (buna-n)	L100025-101
7	O-ring, sleeve	L100139-006
8	Retainer, differential valve, (brass)	L100160-050
9	Screw, 10-32 x 1/2", buttonhead, S.S.	L041750-010

NEPTUNE/LIQUA-TECH METER PARTS

DESCRIPTION	PART #		
3/4" and 1" Meter	**3/4"**	**1"**	
Gasket, Main Case	L4861-016	L4861-016	
Measuring Chamber, Complete	L42075-101	L42075-101	
Gasket, O-Ring, Vapor Release Cover	L100139-012	L100139-012	
Strainer Assembly	L101738-001	L101738-001	
Seal, Differential Valve, U-Cup	L100025-008	L100025-008	
O-Ring, Inlet/Outlet, Differential Valve	L100139-007	L100139-007	
Differential Valve Repair Kit	L100028-011	L100028-011	
Complete Gasket/Oring Kit	L101756-001	L101756-001	
1 1/4", 1 1/2", and 2" Meter	**1 1/4"**	**1 1/2"**	**2"**
Stud, Register Mounting	L84435-000	L84435-000	L84435-000
Gasket, Main Case	L4862-008	L4862-008	L84806-000
Measuring Chamber, Complete	L43260-101	L83271-101	L45806-101
Star Connection	L82976-001	L82976-001	L82976-001
Gear Train, Complete	L83501-000	L84981-000	L83502-000
Seal, U-Cup Shaft	L100025-002	L100025-002	L100025-002
Complete Gasket/Oring Kit	L101757-001	L101757-001	L101758-001
Vapor Release and Strainer		**1 1/2"**	**2"**
Gasket, O-Ring. Vapor Release Cover		L100139-022	L100139-022
Main Valve, Complete		L89274-006	L89274-006
Piston, Seal		L83179-000	L83179-000
Float, Complete		L82476-001	L82476-001
Strainer and Gasket Assembly		L101433-704	L101462-003
Inlet Check Valve, Complete		L84983-704	L84813-702
Gasket, O-Ring, Strainer Cover		L100139-010	L84818-000
Differential Valve		**1 1/2"**	**2"**
Diaphragm		L83771-002	L83771-002
O-Ring		L100139-001	L100139-001
Gasket, Flange		L82060-000	L84818-000
Temperature Compensator	**1 1/4"**	**1 1/2"**	**2"**
Gear Train, Complete	L83501-000	L84981-000	L83502-000
Seal, U-Cup Shaft	L100025-002	L100025-002	L100025-002
Adapter Unit, Complete	L86602-005	L86602-005	L86602-005
Stud, Regoster Mounting	L84435-000	L84435-000	L84435-000
Rollpin	L100370-003	L100370-003	L100370-003
Drive Fork	L84192-006	L84192-006	L84192-006
Neptune Registers	**Part#**		
600 Series Register (for 3/4" meter)	100498-009		
833 Printer Register	880030-000		
601 Series Register (for 1" meter, 1/10th)	100498-016		

HANNAY REELS

SERIES PB

Explosion-proof power rewind reels. Standard inlet is 90° ball bearing swivel joint with 1 1/2" female NPT threads. Reels are available with top or bottom mounted guide master for use when recovery is at an angle other than straight off the reel.

MODEL NUMBER*	1" HOSE CAPACITY
*24-23-24	125'
30-23-24	150'
28-25-26	200'

* Add Prefix EPB, EPBGMB or EPGBMT to model number to specify style reel desired.

EPB

EPBGMB

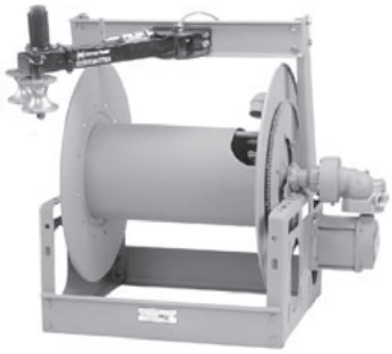

EPBGMT

HANNAY REEL PARTS ID GUIDE

SWIVEL JOINTS, RISERS, HUB ASSEMBLIES

ITEM NO.	Part No.	DESCRIPTION
C1	9927.8138	1/2" 90° MxF BP Super Swivel
C2	9929.8538	1" 90° FxF BP Super Swivel
C3	Specify	Barco Repair Kit (Specify Size)
C4	9927.8151	1/2" 90° FxF Super Swivel (FxF also Avail) 9927.8151
C6	Specify	Super Swivel Repair Kit (Specify Size)
C7	9930.4210	1-1/2" 90° FxFxV Swivel (WHJ1590)
C8	9930.0080	1-1/2" Straight FxFxV Swivel (WHJ15180)
C9	9936.0642	1-1/2" PK-1 BUNA-N Packing (Merkel)
C10	9930.5703	1 1/2" Straight Victaulic H-5 Joint
C11	9936.0659	H-5C Rope Packing Seal for H-5 Joint
C12	9929.0501	1" 90° Full Circle Swivel
C13	9930.0531	1-1/2" 90° FxF Full-Circle Swivel
C14	9901.1600	1" FIPT Iron Welded Hub Assembly (Specify Model)
C15	9901.3760	1-1/2" FIPT Iron Flanged Riser
C16	9965.0021	H-150G Gasket for 1-1/2" Riser
C17	9901.2840	1-1/2" Hub Assy Complete (Specify Model)

HANNAY REEL PARTS ID GUIDE

BEARINGS

ITEM No.	Part No.	DESCRIPTION
E3	9902.1200	1/2" S.A. Ball Bearing Complete
E4	9902.1300	1/2" S.A. Ball Bearing Insert
E5	9902.1400	1" S.A. Ball Bearing Complete
E6	9902.1500	1" S.A. Ball Bearing Insert
E7	9902.1610	1 1/2" S.A. Bronze Bearing Complete (E-coated)
Not Shown	9902.1620	1 1/2" S.A. Bronze Bearing Complete (304 S.S.)
E8	9902.1700	1 1/2" S.A. Bronze Bearing Insert
E9	9902.1730	1 1/2" S.A. Bronze Bearing Insert

SWITCHES AND ELECTRICAL

ITEM No.	Part No.	DESCRIPTION
B1	9917.0001	Red dot EXPB-2A Switch (12 volt)
B2	9917.0012	Red Dot Internal Switch
B3	9917.0150	Cover Plunger Assembly
B4	9917.0061	Red Dot 5-Port Round Junction Box/Cover
B5	9917.0062	#6 Wire Nut (For Red Dot Junction Box)
B6	9917.0063	Insulated "Bug" Connector
B7	9917.0025	12 Volt Solenoid (Diode-Suppressed)
B8	specify	SDLM Circuit Breaker (Specify Amperage)
B9	9917.0024	CB-2 Mounting Bracket (for Cuircuit Breaker)
B10	9917.0006	Push-Button 12 Volt Switch (Less Cap)
B11	9917.0008	Rubber Cap (For Push Button Switch)
B12	9917.0200	EPS-1 Switch (Used with Guidemaster)
B13	9917.0207	EPS-2 Mounting Bracket (Used with EPS-1)
B13A	9917.0205	EPS-1 Mounting Bracket (Used with GM600)
B14	9917.0208	Extension Bracket for EPS-2
B15	9916.0085	Rectifier for 115 Volt Exp-Proof Motor
*	BSW90030	Push button 12 Volt Switch w/ Rubber Cap

**BSW90030 is a replacement for B10 & B11*

MOTORS, SPROCKETS, CHAIN

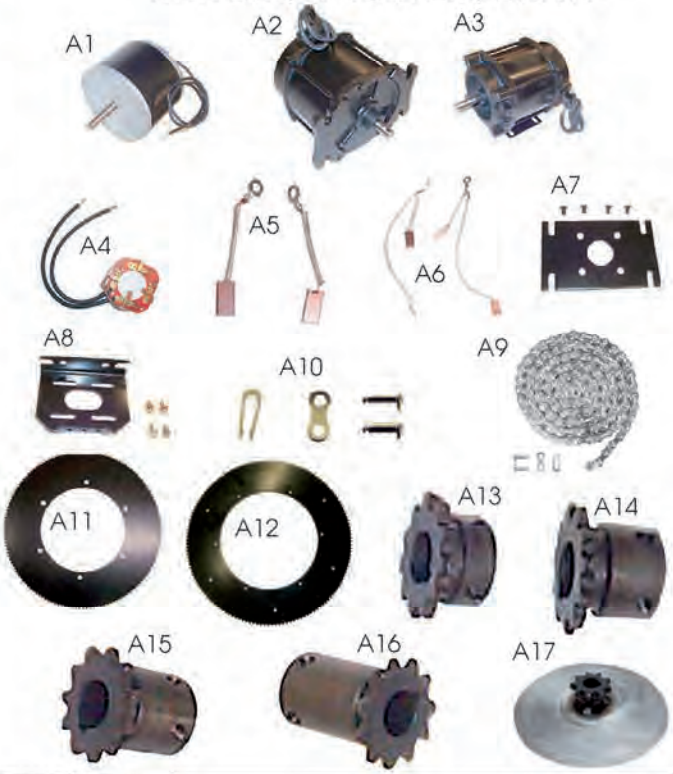

ITEM No.	Part No.	DESCRIPTION
A1	9915.0042	12 Volt Flange Mount Non-Explosion Proof Motor
A2	9915.0003	12 Volt Flange Mount Explosion Proof Motor, 1/2 HP, pre-2009
	9915.0009	12 Volt Flange Mount Explosion Proof Motor, 2/3 HP, post-2009
A3	9915.0014	12 Volt Base Mount Explosion Proof Motor
A4	9916.0013	Brush Board Assembly (w/ springs and brushes) for 12 Volt 1/2 HP Motor
A5	9916.0071	Pair of Brushes for 12 Volt Non-Explosion Proof Motor (#572008)
A6	9916.0070	Two Pairs of Brushes for 12 Volt Explosion Proof Motor (#572000)
A7	9923.0008	Flange Mount Motor Plate for Non-Explosion Proof Motor
A8	9923.0006	P66A-00090 Motor Mounting Plate Right Angle for Non-Explosion Proof Motor
A9	9912.0001	#35 Chain, 10' Length w/ Connecting Link (35C10)
	9912.0006	#35 Chain (SS), 10' Length w/ Connecting Link
A10	9912.0010	Connecting Link for #35 Chain
	9912.0017	Connecting Link for #35 Chain, SS
A11	9910.1423	138T35 Disc Sprocket, 16 5/8" Diameter, E-coated
A12	9910.3128	146T40 Disc Sprocket, 23 1/2" Diameter, E-coated
Not Shown	9910.1321	112T35 Disc Sprocket, 13 3/8" Diameter. E-coated
A13	9910.1116	11T35 Sprocket, 3/4" Long
A14	9910.1117	11T35 Sprocket, 1 1/16" Long
A15	9910.1118	11T35 Sprocket, 1 5/16" Long
A16	9910.1119	11T35 Sprocket, 1 3/4" Long
	9910.1120	11T35 Sprocket, 2 3/8" Long

****#40 Chain Sprockets (2006 and newer model reels) Most Likely Have This Chain Configuration***

Part No.	DESCRIPTION
9912.0002	#40 Chain, 10' Length w/ Connecting Link (40C10)
9912.0009	Connecting Link for #40 Chain
9912.0108	#40 Chain (SS), 10' Length w/ Connecting Link
9912.0018	Connecting Link for #40 Chain, SS
9910.0908	9T40 Sprocket, 7/8" Long
9910.0917	9T40 Sprocket, 1 5/16" Long (plated)
9910.0919	9T40 Sprocket, 1 3/4" Long

Retrofit Kit

9920.3001	Retrofit Kit to Convert #35 Chain to #40 Inclusing Chain, Large & Small Sprockets
	**Requires model of Reel being converted to properly size sprockets*

HANNAY REEL PARTS ID GUIDE (CONTINUED)

ROLLER ASSEMBLIES, CABLE GUIDES, HOSE STOPS

ITEM NO.	Part NO.	DESCRIPTION
D1	Specify	Top Wind FH-3 Mtg. Brkt. (Specify Model)
D2	9939.0042	FH-3 Roller & Spool Assy. (Specify Model)
D3	9940.0012	FH-307 Delrin-Over-Steel Step Bolt
D4	9940.0004	FH-309 Chrome Snap Cap
D5	9940.0005	FH-301 Spool
D6	9940.0006	FH-302 Block
D7	9940.0007	FH-303-15 (1.5") Trunnion Bearing
D8	9940.0008	FH-303-2 (2") Trunnion Bearing
D9	9939.0062	Utility Hose Roller Assy. "C" (Spec. Model)
D10	9940.0076	EH-650 Mounting Block (Plated)
D11	9939.0003	EH-714 Roller Assembly
D12B	9922.0200	HS-35 Hose Stop (Specify O.D. of Hose)
D13	9922.0012	HS-45 Hose Stop (Specify OD of Hose)
D14	9951.0009	GR-4A Guide Arm Positioner
D15	9951.0010	GR-4 Guide Arm
D16	9951.0012	GR-5 Bronze Scoop Cable Guide
D17	Specify	"R200" Series Roller Assembly
D18	Specify	"N200" Series Roller Assembly
D19	Specify	"R300" Series Roller Assembly
D20	Specify	Roller Mounting Arm (2) per reel (For "N" Serires Spring Reels)
D21	9940.0016	FH-303 1 1/2" Trunnion Bearing (New Style) (No through hole)
D22	9940.0010	FH-305 2" SST Roller Tubing
D23	9940.0003	1 1/2" SST Roller Tubing
D24	9940.0009	FH-304 Roller Rod
D25A	9940.0071	LEFT HAND roller mounting block (plated)
D25B	9940.0072	RIGHT HAND roller mounting block (plated)
D26	9939.1062	Assy C2 Roller with 1 1/2 Diam. Roller (Style 2) (Specify Model)

GUIDEMASTER PARTS AND BRACKETS

ITEM NO.	Part NO.	DESCRIPTION
G1	9945.0026	GM Ball Bearing (For GM-609 Roller)
G2	9945.0044	GM-108 Ball Bearing (For GM-109 Roller)
G3	9945.0019	GM-609 Roller w/GM Bearing
G5	9944.0040	GM-700 Guide Arm Body Assy w/ mtg. Yoke
G6	9945.0009	GM Mounting Yoke w/ Bronze Bushing
G7	9945.0011	GM Oil-Impregnated Bronze Bushing
G8	9945.1001	GM Roller body w/ Mtg. Bolts
G10	9945.1005	GM roller Mtg Bolts
G11	9945.1003	Pinlock assy for GM 700
G12	9945.1004	GM Roller Bolt Mounting Plate
G15	9945.0035	GM Cross Member Assembly (3 Pieces) (Specify Model)
G16	9945.0036	GM Bottom-Wind Brackets (Pair)
G17	9945.0037	GM Top-Wind Brackets (Pair)
G18	9939.0069	Assy. "B" Roller for Bottom-Wind Guidemaster Reels (Specify Model)

HANNAY REEL PARTS

REWIND ASSEMBLIES, BRAKES, RATCHETS

ITEM NO.	Part NO.	DESCRIPTION
F1	Specify	30" Rewind Bracket (specify right or left)
F2	9914.0233	VR-1 Vertical Rewind Assembly
F3	9914.0372	H-26 Ring Gear
F4	9914.0382	H-28 Ring Gear
F5	9914.0393	H-27 Pinion Gear
F6	9914.0404	H-29 Pinion Gear
F7	Specify Model	Pinion Shaft
F8	9914.0351	Pinion Shaft Collar
F9	9914.0618	Pinion Gear Guard (E-Coated)
F10	9914.0243	H-2A Pinion Shaft Bearing
F11	9914.0413	H-30A Brake Wheel
F12	9914.0451	H-31 Brake Spring
F13	9914.0433	H-3 Brake Pad
F14	9914.0011	H-18 Hand Crank
F15	9947.0020	Air Caliper Brake
Not Shown	9947.0001	Manual Caliper Brake
F16	9947.0024	Pair of Brake Pads (For Air Caliper Brake)
F17	9947.0035	Comet Brake Assembly (IV Style)
F18	9947.0036	Comet Brake Strap Only (IV Style)
F19	9947.0038	Comet Brake Iron Hub (IV Style)
F21	9922.0015	Ratchet Wheel (new 2 position)
F22	9965.0030	PL-1 Pinlock
F23	9965.0036	PL-1 Pinlock with Extended Mounting Ears
F24	9922.0029	Ratchet Locking Assembly (for N-Series Spring Reels)
F25	Specify Model	Ratchet Locking Assembly (for Regular Frame Spring Reels)
F26	9947.0090	Comet Brake Assembly (Bearing Mounted Style with Stub Shaft)
Not Shown	9947.0043	Comet Brake Assembly (Bearing Mounted Style with Stub Shaft)
F27	9947.0130	Cam Lever Drag Brake Kit (including mounting hardware
Not Shown	9922.0008	Ratchet Locking Spring

SWIVEL JOINTS

MARSHALL HOSE SWIVEL

For use with all hose end valves. The swivel action makes connection of those end valve to filler valve much easier.

Item#	Connection Size
ME850SS-6	3/4" MNPT x 3/4" FNPT
ME850SS-6/8	1"MNPT x 3/4" FNPT
ME850SS-8	1"MNPT x 1" FNPT
ME850SS-8/6	3/4"MNPT x 1" FNPT

LP-92 TUBE OF GREASE

SMITH "FULL-CIRCLE" SWIVEL JOINTS

SMAC-112

1 1/2" 90° joint is designed to replace a Hannay hose reel joint, or it can be used as a swivel in a rigid pipe loading arm system.

SMAC-200 2" Full Circle Swivel

Kit#	Repairs	Description
SMAC-112NSK	SMAC-112	1 1/2" NH3 Repair Kit
SMAC-112SK	SMAC-112	1 1/2" Smith Repair Kit

GLOVES

WINTER MONKEY GRIP
G23-193
Liquidproof vinyl coating resists oil, acids, chemicals, and caustics. Curved fingers, wing thumb, and general softness make this glove very comfortable and easy to wear. Foam insulation locks out cold, keeps hands warm. Deep fleece lining helps retain warmth, feels good on the hand.

G52-547L
Summer weight driving glove

BLUE HYCRON LARGE GLOVE
G27-805-10
Made extra tough for heavy-duty jobs involving rough, abrasive materials. Soft jersey lining eliminates seams from working areas for greater comfort. Heavy-duty nitrile coating provides excellent dry grip as well as superior performance when handling rough, abrasive materials.

RAISED FINISH MONKEY GRIP GLOVE
G23-173
Liquidproof vinyl coating resists oil, acids, chemicals, and caustics. Curved fingers, wing thumb, and general softness make this glove very comfortable and easy to wear. Foam insulation locks out cold, keeps hands warm. Deep fleece lining helps retain warmth, feels good on the hand.

FIBERWIRE NITRILE DIPPED GLOVE
GFN-12K1L SIZE - XL
GFN-12KLF SIZE - L
Glove is lined with a seamless knitted High-Density Polyethylene (HDPE) & Glass Fiber for superior cut and abrasion protection. Palm is dipped in BLACK Nitrile and then in SANDY Nitrile for grip in dry, wet or oily conditions. The Nitrile is resistant to chemicals and caustic substances.

GLASSES & KNEE PADS

QUEST SAFETY GLASSES
EQT-12KA BLACK W/ AMBER LENSES
EQT-12KC BLACK W/ CLEAR LENSES
EQT-12KST BLACK W/ SMOKE LENSES
EQT-12CFA CAMO W/ AMBER LENSES
Small to medium fit and coverage. Optically correct polycarbonate lenses. Frame is constructed with soft rubber temple and nose bridge. Impact protection meets ANSI Z87.1. Exceeds UV-A/UV-B-UV-C.

KAX-OK APEX GEL KNEE PROTECTORS

Contains a gel insert that protects the knee cap maximizing comfort and protection. Adjustable dual strap design that resists slipping. Hinged upper strap to prevent binding and offering optional upper strap removal. Textured TPR knee cap maximizes traction and stability on all surfaces. Ballistic nylon construction that resists abrasion for increased durability. Designed to prevent "roll off" on hard surfaces. Designed and engineered for professional use.

EMERGENCY WARNING TRIANGLES

R219-3C
Set of 3 triangles in a case.

FIRE EXTINGUISHERS

CLASS A - B - C DRY CHEMICAL FIRE EXTINGUISHERS

Item #	Description
TGP-10G	10#
TGP-20D	20#

V138
Fire extinguisher decal, 4" x 18"

M138
Fire extinguisher sign, 4" x 18" (Aluminum)

VEHICLE BRACKETS

Item #	Description
TRB/10	10#
TRB/20	20#

SERVICE EQUIPMENT

FIRST AID KIT

FA20030

This first aid kit meets or exceeds ANSI Z308.1-1998 minimum requirements for workplace safety.

Kit contains:

1 oz. eyewash, 10 antiseptic towelettes, burn cream with lidocaine, sheer 1" x 3" bandages (16), conforming gauze dressing 2" x 5 yd., 1/2" x 5 yd. adhesive tape, (4) 3" x 3" gauze pads, triangular bandage, 4 pair disposable latex gloves, small boxed ice pack, wire scissors, tweezers, 5" x 9" abdominal pad (sterile), first aid guide, 10 ammonia inhalant swabs, 8 flexible fingertip bandages, 8 bulk alcohol pads, 6 triple antibiotic ointment, 2 sterile gauze pads 4" x 4", and 12 aspirins.
Box Dimensions: 7 3/16" H x 10 11/16" W x 2 3/8" D.

BOBTAIL PEG KIT

MEP300K

Safety wood plugs for plugging broken valves or pipes in emergencies. Plugs are driven into opening with a hammer to slow or stop flow temporarily until tank can be emptied. Includes 3/4", 1 1/2", & 2 1/2" 12" long plugs with holder.

CHOCK BLOCKS

WC1267

Aluminum Chock block (sold individually)

WCB186

Bracket for WC1267 Chock Block

ME200

Aluminum Chock block
7"H x 10"L x 7"W
(sold individually)

ALD-B
DOUBLE RAIL CAR CHOCKS

THERMOMETERS

TANK CAR THERMOMETERS

Thermometer is designed to measure the temperature of propane in a railroad tank car.

Item #	STEM LENGTH
X21420	12" Thermometer w/case
X21272G	12" Thermometer

EXPLOSION-PROOF FLASHLIGHT

1259

Explosion proof flashlight designed to be used in hazardous locations, such as on a bobtail.

VALVE LOCKS

511

Tamper proof SAF-T-LOCK

511-K

Spare key for 511 SAF-T-LOCK

D1134 Locking cap for 1 3/4" acme filler valves.

LCS4 Service Valve Lock. Clamps over a handwheel to prevent valve from being opened.

8509910 BARRELL LOCK

Locks Meter Stop Valves.

8610005 KEY

Extra Key for 8509910 Lock.

TRENCHER

F1202H13 TRENCHMASTER

A light weight, easily transported trencher perfectly suited for laying gas lines. Has a Honda 13HP engine.

Weight:	273 lbs.
Wheels:	Steel w/pneumatic tires
Points:	Tungsten carbide
Drive:	Pulley & belt system
Rate:	Up to 20 feet per minute
Depth:	3 to 12 inches
Width:	1/2" to 3"

MAGNESIUM ANODE

Under most soil conditions, the installation of a magnesium anode will not protect a base steel surface by itself. The steel surface must be covered by a good dielectric mastic tape or coating. Care should be taken that there are no scrapes or breaks in the protective coating.

ITEM #	SIZE	SUGGESTED TANK SIZE*
AN5#	5 LBS.	UP TO 120 GAL
AN9#	9 LBS.	UP TO 300 GAL
AN17#	17 LBS.	UP TO 500 GAL

* The size of the anode is dependent on different variables such as soil condition, etc.
** For 1000 gallon tanks, use 2 17# Anodes.

THERMOWELD MOLD WITH STRIKER

M100 - pipe connections larger than 4"
M101 - pipe connections less than 4"

MAGNESIUM ANODE (CONTINUED)

STRIKER
Flint Gun

A200
#12 copper sleeve

CA15
THERMOWELD metal shot (20 per box including discs)

TSP01K
ANODE TEST APPARATUS

Use this apparatus to test to determine if the anode is properly protecting the tank or gas line.

Part #	Description
*8B	Copper Sulfate Half Cell
*TSP01	Anode Test Pole
*DM383	Digital Multi Tester with Boot

*TSP01K components can be ordered individually

ATK04
Anode Test Kit w/ Case

Kit includes: Half-Cell Electrode, Digital Multimeter, Copper Sulfate Crystals, & Anode Test Sheet

ATS
ANODE TEST STATION

Provides a convenient way to monitor underground tank systems. Cathodic protection test station and terminal enclosure is a high strength, maintenance free, and non conductive.

SPECIAL TOOLS

C1430G
BRASS HAMMER

FYR-STYK
EXTENDABLE MATCH HOLDER

Only 5 1/2" long when closed, extends to over 19" for hard to reach pilots & burners. Has magnet and pocket clip.

TRUCK COMPONENTS

408A2F-2M
TRAP-IT FILTER

Primarily used as filter in the liquid control line on a Rego Flomatic Internal Valve. 3/8" Flare X 3/8" MPT.

CV25
THROTTLE CONTROL CABLE

25' cable designed to control the throttle of a bulk truck from the rear of the vehicle.

C2570-25
PTO CABLE

Waterproof covered cable control for power take-offs.

ENGINE REMOTE SAFETY SHUT-OFF SYSTEMS

A push of the button on the small hand remote transmitter instantly shuts down the engine, stopping the pump, allowing a Rego Flomatic valve or a pneumatically operated valve to close. For a manually operated valve, see WR1760K Air Compressor Kit.

Item #	Description
M3300-FGL	Remote Safety Shutoff, Generic w/lockout
K02-004	ARO Solenoid Valve w/ Bracket
MVAP327G	Remote Transmitter Only, Generic
M-ABK	Air Brake Kit
WR1924-01	DOT Approved 1/4"OD Tubing
MVAP2272120	Transmitter Battery
IEM378463	Air Valve (Toggle Type)
IEST146749	Air Valve (Push Button Type)
VAP-WIRE	M3200 Wiring Harness
WR17609016	Air Pressure Switch

See page 161 for DOT air line tubing and fittings.

WR1760K
AIR COMPRESSOR W/ INSTALLATION KIT

This kit is designed to provide an air source to allow the use of air operated internal valves on bulk trucks without air brakes.

WR1760K-2047
AIR COMPRESSOR ONLY

PROPANE FLARE / VAPORIZERS

PROPANE FLARE

RED DRAGON MANUAL PROPANE FLARE

Make Evacuating Remote Propane Tanks quick, safe and easy.

- Flare up to 529 gallons/hr.
- No electricity required
- Compact & portable design
- Quick & easy setup & simple to use
- Great for emergency evacuation situations
- Stable & strudy construction

The **RED DRAGON Manual Propane Flare** allos you to evacuate bulk tanks, bobtails and other tanks anywhere quickly, safely and without venting raw propane into the atmosphere. This compact, durable unit is quick to set up, very simple to use and requires no electricity making it perfect for emergency crews, haz mat teams and fire departments who need to act fast and in remote locations. Keep one on hand in case emergency flare-off is necessary. Also great for propane distributors and dealers flaring off tanks so that valves and gauges may be changed out, saving you time and money. Comes with everything necessary except the vapor cylinder for pilot torch operation.

FEATURES OF ALL FLARE MODELS

- Flares liquid or vapor propane
- Telescoping flare tower sets up fast & stands 9' above the ground keeping the flame at a safe distance
- Convenient valve box & simple design featuring quick connectors & flared fittings make set up quick & easy
- Flare Tower stands 9' above the ground, keeping the flame at a safe distance
- 25' U.L. listed evacuation hose with bulk adaptor
- 10' U.L. listed pilot hose & regulator
- Stable triangular base & ground stakes for set up on any terrain
- Quick and easy setup & operation

PFM-16-LPS

1/2" Flare
48,300,000 BTU/hr Max
Flares up to 529 gal/hr

VAPORIZERS

WHAT IS A PROPANE VAPORIZER?

A propane vaporizer is actually a boiler. Instead of boiling water, it boils propane. It may sound strange that heat is required to vaporize propane when propane will boil at -44 degrees F., but when propane vaporizes by expansion alone, it causes a refrigeration action. In applications with high propane demand, the uncontrolled vaporization will cause freeze-ups. Direct fired vaporizers use a portion of the propane they vaporize to supply the heat for the vaporization process.

RANSOME VAPORIZERS

These units feature a modular design that provides maximum capacity in a compact, rectangular unit. It incorporates 2 stage pressure regulation and a precision operating temperature switch which is factory-set and sealed to prevent tampering. Mechanical liquid inlet valve provides positive control of LP Gas liquid level on all RH50, 90, and RH120 sizes. Larger sizes incorporate a reliable float switch and electric inlet valve to prevent liquid carryover.

RH OPTIONS

Electric Pilot Reignitor Add Suffix E
Protects against pilot outage due to unusually turbulent winds and eliminates need for matches to start vaporizer. 110 V required.

Item #	Gal./Hr.	Millions of BTU/Hr.
RH50	50	4.58
RH80	80	7.32
RH120	120	10.98
RH200	200	18.30
RH400	400	36.60
RH600	600	54.90
RH800	800	73.20
RH1000	1000	91.50

ALGAS-SDI DIRECT FIRED VAPORIZERS

Range in size from 40 gph to 800 gph. The Direct Fired Vaporizers are used in a wide variety of applications, temporary and permanent, such as construction heating, crop drying, greenhouses, animal confinement and small to medium industrial applications. The units are simple to install with only two connections to make and require no electricity. The units are standard with a 9VDC Auto re-ignitor and relief valve pipe-away adapter.

Model #	GPH Rating	Million BTU/Hr.
40/40H	40	3.64
80/40H	80	7.28
120/60H	120	10.92
160H	160	14.5
320H	320	29.1
480H	480	43.6
640H	640	58.2
800H	800	72.8

VAPORIZERS (CONTINUED)

ELECTRIC VAPORIZERS

Algas-SDI Electric Vaporizers range in size from 12.5 gph to 160 gph. Algas -SDI manufactures three types of reliable, dry electric vaporizers in sizes for every application. Their explosion proof design allows for installation near a tank or building with no distance restrictions. The electric vaporizers are ideal for compact installations with space restrictions and are used in a wide variety of applications such as schools, hospitals, mine sites, animal confinement, hotels and other commercial applications.

TORREXX ELECTRIC VAPORIZERS

The TORREXX Electric Vaporizers provide instant operation within on minute from a cold start. Suitable for all climates and available in worldwide voltages. All units are standard with auto restart. Available options include economy valve, remote alarm box, TX stand and a valve & strainer package for ease of installation. The TORREXX meets Class 1, Division 1, Group D (explosion proof) requirements per NPFA #58 & #70.

Model #	Gal./Hr.	Millions of BTU/Hr.
TX25	12.5	1.14
TX50	25	2.28
TX100	50	4.55
TX160	80	7.28
TX240	120	10.9
TX320	160	14.5

VAPORIZERS (CONTINUED)

ZIMMER™ ELECTRIC VAPORIZER

The ZIMMER™ is a simple, reliable and affordable option for smaller loads. The unit can be operated on multiple voltages ranging from 120V/1Ph to 240V/1Ph without re-wiring the unit. Frequently used in applications such as animal confinement, restaurants and light commercial applications, it's small, compact and explosion proff design allows it to be mounted on the wall or directly on top of your tank! Low maintenance with fewer parts to maintain. Optional tank and wall mount kits are available lwth piping kits to match each one.

Model #	GPH Rating	Million BTU/Hr	
Z40P-V1	20	1.82	**
Z40P-UL/CE-V1J	20	1.82	UL/CE Approved

**Explosion proof electrical seal-off factory installed. UL/CE model needs seal-off installed in the field.

ALGAS 2ND SUN

Catalytic heating is a flameless process that involves chemical reactions aided by a catalyst. The reactions occur on an electrically heated catalyst surface causing complex molecules to rearrange as simpler molecular structures. The primary byproduct of this catalytic process is heat. Second Sun emits this heat against the wetted surface of the tank as infrared waves similar to a radiant heater. This warm, low intensity heat mimics the energy from the sun. Since catalytic heating is flameless, Second Sun meets Class I, Division 2, Group D hazardous location requirements.

Vaporization Type:	No Flame (Catalytic heater)
[1]Start-up Electrical:	DC (only for start-up)
[2]Operating Electrical:	Self-generated
Electrical Class:	Hazardous Locations (Class I Division 2 Group D)
Environmental Range:	-40° F to 120° F (-40° C to 49° C)
Fuel Type:	Propane, butane or any LPG blend
Inlet Fuel Connection:	¼" NPT
Max. Inlet Pressure:	Regulated: 10 – 11" wc; (254 – 279mm H20); Unregulated: 10 – 250 PSIG; (0.7 – 17.2 barg)
On/Off Activation: *Factory Settings*	Via tank pressure (adjustable set point) ON @ <50 PSIG (3.45 barg); OFF @ >60 PSIG (4.14 barg)

Safety Monitoring (Per NFPA 58)

Tank Pressure: *>160 PSIG (11.03 barg)*	OFF — Manual restart required
Tank Surface Temperature (2): *>125° F (51.7° C)*	Upper Sensor: Reverts to Standby mode Lower Sensor: OFF — Manual restart required
Below Min Pilot Temp.:	OFF — Manual restart required

[1] *Use vehicle battery and "jumper cables"*

[2] *Thermoelectric device creates voltage based on ΔT*

[3] *Second Sun* ***adds*** *vaporization capability to the ambient vaporization capability of the tank itself.* ***Total vaporization*** *becomes the sum of the 'natural' + 'added' vaporization.*

	MODEL SS-30	MODEL SS-10 — LAUNCH FALL 2013 —
Heat Input:	30,000 BTU/h (7560 kcal/h)	10,000 BTU/h (2520 kcal/h)
[3]Added Vaporization to Tank:	2.2MMBTU/h @ -20°F (550,000 kcal/h @ -28°C	0.5MMBTU/h @-20°F (126,000 kcal/h @ -28°C
Mounts To:	1,000–12,000 US Gal. Tanks (3,785-45,425 liters)	250–3,900 US Gal. Tanks (946–14,742 liters)
Tank Diameters:	41" – 84" (1,041 – 2,134 mm)	30" – 84" (762 – 2,134 mm)
Unit Weight:	125 lbs. (57 kg)	25 lbs. (12 kg)
Unit Dimensions:	74"L x 19"W x 9" H (1,880mm L x 486mm W x 227 mm H)	35"L x 14"W x 9"H (889mm L x 356mm W x 227mm H)
Shipping Weight:	185 lbs. (84 kg)	50 lbs. (23 kg)
Shipping Dimensions:	84"L x 24" W x 12" H (2,134mm L x 610mm W x 305mm H)	42"L x 21"W x 12"H (1,067mm L x 533mm W x 305mm H)

TORCHES / SEDIMENT TRAPS / HEATERS

MANCHESTER TORCHES

M8062 HANDIBOY KIT

Contains 30" burner w/10' of hose, POL connector and instructions. Capacity is 245,000 BTU @ 50 psig and 350,0000 BTU @ 100 psig.

M8061 POWERJET KIT

Contains 3' burner w/10' of hose, 0-100 lb. adjustable regulator, pressure gauge, POL connector & instructions. This torch has a pilot & a squeeze control valve for intermittent operation. Capacity is 350,000 BTU @ 50 psig and 500,000 BTU @ 100 psig.

M8012 SUPER 8 BURNER

8' Burner is similar to the Powerjet burner but extra length allows for better access to weeds, etc. For the kit add optional items:

Item#	Description
MER613-300	25' hose
ME318	POL adaptor
MEGR-6120-30	Adjustable regulator

FLAME ENGINEERING TORCHES

FEVT2-23C HAND TORCH KIT

Includes 100,000 BTU/hr hand torch, 10' of hose, flame adjusting valve, POL adapter, & flint igniter.

FEVT3-30C TORCH KIT

Includes 500,000 BTU/hr 30" torch, 10' of hose, flame adjusting valve, & POL adapter.

SEDIMENT TRAPS

DRIP LEG KITS

These kits include a tee, two nipples, and a cap. They are available in malleable black pipe or galvanized pipe. For low pressure use.

Item #	Description
DLKB-3/8	3/8" Black
DLKG-3/8	3/8" Galvanized
DLKB-1/2	1/2" Black
DLKG-1/2	1/2" Galvanized
DLKB-3/4	3/4" Black
DLKG-3/4	3/4" Galvanized

INFRA-RED HEATERS

HS125LP/NG CONTRACTOR SERIES

The HS125 is a 125,000 BTU Radiant Heater. Made of rugged durable steel, this heater is built to last. The HS125 provides reliable heat for areas up to 3000 square feet. The HS125LP operates up to 17 hours on a 100# propane. The HS125 now features a folding handle and transport wheels for easy moving. This unit also features a piezo push button ignition. The HS125LP comes ready to use with the included 12 foot hose and regulator.

HS25N/HS22L INFRA-RED GARAGE/SHOP HEATER

Wall mounted unit gives you the choice of LPG (22,000 BTU/hr.) or Natural Gas (25,000 BTU/hr.). All necessary brackets, hardware and thermostat included. No electricity required.

MH35CLP

Portable radiant LP heater. Heats up to 800 sp. ft. CSA certified. No electricity required - heats during power out-ages. Clean burning, quiet & odorless. Tip-over switch with safety shutoff. POL. connection with 20' hose included. Operates on standard 20# cylinder. Fully assembled, ready to use.

HS35CLP

This heater has a built-in battery and charger. Runs 8 hours per charge. Recharges in 5-6 hours. Unit can operate while plugged in and is charging. Utilizes an ultra quiet fan and burner. Unit has a lower surface temperature.

INFRA-RED HANGING HEATERS

INFRARED HEATER APPROXIMATE COVERAGE

40,000 BTU	$400'^2$	Mounted 12'-14'
60,000 BTU	$600'^2$	Mounted 16'-18'
100,000 BTU	$1000'^2$	Mounted 20'-24'
120,000 BTU	$1200'^2$	Mounted 22'-28'

4040 SERIES OVERHEAD HEATERS

For use in low profile buildings w/ceil-ings from 10' to 15'.
Approximate coverage area is 400^2 foot.

MODEL #	GAS	IGNITION	BTU'S/HR*	WEIGHT
*HS4040PPNG	N	POWER PILE	40,000	25 LBS.
*HS4040PPLP	LP	POWER PILE	40,000	25 LBS.
*HS4040SPNG	N	AUTO SPARK	40,000	25 LBS.
*HS4040SPLP	LP	AUTO SPARK	40,000	25 LBS.

NOTE: All 4040 Heaters come with an extra orifice to convert to 30M.
*Available as a non-stock item.

8060 SERIES OVERHEAD HEATERS

For use in high profile buildings w/ ceilings from 16' to 20'. Approximate coverage area is 600^2 foot.

MODEL #	GAS	IGNITION	BTU'S/HR*	WEIGHT
*HS8060PPNG	N	POWER PILE	60,000	34 LBS.
*HS8060PPLP	LP	POWER PILE	60,000	34 LBS.
*HS8060SPNG	N	AUTO SPARK	60,000	34 LBS.
*HS8060SPLP	LP	AUTO SPARK	60,000	34 LBS.

NOTE: All 8060 Nat Gas Heaters come with extra orifices to convert to 50M or 70M. A11 8060 LP Gas Heaters come with an extra orifice to convert to 50M.
*Available as a non-stock item.

9100S SERIES OVERHEAD HEATERS

For use in high buildings w/ceilings from 18' to 24'.
Approximate coverage area is 1000^2 foot.

MODEL #	GAS	IGNITION	BTU'S/HR*	WEIGHT
*HS9100PPNG	N	POWER PILE	100,000	46 LBS.
*HS9100PPLP	LP	POWER PILE	100,000	46 LBS.
*HS9100SPNG	N	AUTO SPARK	100,000	46 LBS.
*HS9100SPLP	LP	AUTO SPARK	100,000	46 LBS.

NOTE: All 9000S Heaters come with extra orifices to convert to 80M or 90M.
*Available as a non-stock item.

INFRA-RED HEATERS (CONTINUED)

9120 SERIES OVERHEAD HEATERS

For use in ultra high buildings w/ ceilings from 24' & higher. Approximate coverage area is 1200^2 foot.

MODEL #	GAS	IGNITION	BTU'S/HR*	WEIGHT
*HS9120PPNG	N	POWER PILE	120,000	61 LBS.
*HS9120PPLP	LP	POWER PILE	120,000	61 LBS.
*HS9120SPNG	N	AUTO SPARK	120,000	61 LBS.
*HS9120SPLP	LP	AUTO SPARK	120,000	61 LBS.

NOTE: All 9120 Nat Gas Heaters come with extra orifices to convert to 100M or 140M. All 9120 LP Gas Heaters come with an extra orifice to convert to 100M.
*Available as a non-stock item.

MR. HEATER SMALL PORTABLE HEATERS

EMH15T/TS

POL connection for use with standard 20# cylinders. Variable BTU's: 8, 12 & 14,000 BTU/HR. Heater shuts off with loss of flame. Operating time on high: up to 1.5 hours. For outdoor use only. This heater has electronic ignition.

EMH30T/TS

Two burner tank top heater. POL connection for use with standard 20# cylinder. Variable BTU's, 8, 12, 14, 16, 28,000 BTU/HR. Heater shuts off with loss of flame. Maximum heating time/HI: up to 15 Hrs. For outdoor use only. This unit has electronic ignition.

EMH45T

Three burner tank top heater. POL connection for use with standard 20# cylinder. Variable BTU's, 8, 12,14, 16, 24, 28, 36, 42,000 BTU/HR. Heater shuts off with loss of flame. Maximum heating time/HI: up to 10 Hrs on a single 20# cylinder. For outdoor use only.

EMH540T

The Mr. Heater 540° Heater 30,000 – 45,000 BTU Liquid Propane Tank Top heater with soft nose POL is the perfect solution for a variety of outdoor heating applications. This heater is constructed with an adjustable 360° burner head that swivels up to 180° which allows you to focus radiant heat in multiple directions. The MH540T is easy to light due to the push button TE valve, and its high quality stainless steel components bring you longer lasting durability and the standard tip over safety shut-off switch brings you peace of mind.

LPG SMALL ENGINE MOTOR FUEL OPPORTUNITIES

Propane is the engine fuel with the best safety record, bar none!
No contamination, environmentally sound, and very very cost effective!
Propane provides a quick payback, typically 30% less than gasoline.
Longer engine life. No spillage or contamination. Less maintenance.
Reduced cost of operation 60% reduction in smog forming emissions and 80% reduction in toxic emissions compared with diesel and gasoline fuel.




There are many small engine market areas
We can provide conversion kits tailored to convert almost any gasoline powered engine

Lawn Care, Floor Buffers , Carpet Cleaning, Forklifts, Pressure Washers, Ag Equipment, Pump Motors,Off Road Vehicles, Rock Climbers, Hill Climbers, Mudders, Generators, Emergency, Standby, Portable, RV, Commercial and Marine Airboats, Concrete Saws, Finishing Equipment, Garden Care, Tillers, Plows, etc

Our systems are engineered for specific applications and come complete with or without tanks, you specify your needs




Types of Conversions

- **Spud in**
- **Adaptor Plate**
- **Direct Carb Replacement**
- **Low Pressure and Hi- Pressure (Stationary or Mobile)**
- **Air or Water Cooled Engines**
- **Bi-fuel and Tri-Fuel Kits available for many Engines**

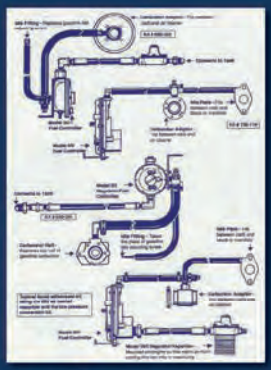

Conversion kits available for these engines and many more

Arctic Cat, Briggs & Stratton, Craftsman, Chrysler, Cushman, Ford, General Motors, Generac, Honda, Kawasaki, Kohler, Kubota, Lauson-Tecumseh, Makita, Mitsubishi, Onan, Tecumseh, Wisconsin, Robin, and Yamaha, plus Chinese clones

To order we need the following information

(Briggs & Stratton, Kohler, Onan, etc.) (**Most Important be Specific**)

Stationary or Mobile_____ Application _____
(Generator, Mower, Buffer etc.)

Type of Fuel _____

(LPG or NatGas) (Mono or Bi-Fuel) Electric or Rope Start

IMPCO MIXERS AND CARBURETORS


50 Series


100/200 Series

50 SERIES


125/225 Series

ITEM #	DESCRIPTION	REPAIR KIT
ICA55	Carburetor (Replaced Model 50)	IRKCA55

60/100/200 SERIES

ITEM #	DESCRIPTION			AIR GAS VALVE ASSY
	MIXER	DIAPHRAGM	AIR HORN	
ICA100M	Standard	Hydrin		IAV1-14

125/225 SERIES

ITEM #	DESCRIPTION		AIR GAS VALVE ASSY
	MIXER	DIAPHRAGM	
ICA125M	Standard	Hydrin	IAV1-14
ICA125M-2	Standard	Silicone	IAV1-14-2
ICA225M-2	Standard	Silicone	IAV1-12-6

IMPCO MIXERS AND CARBURETORS


300 - 1, 20, 50, 70 Series

300-1, 20, 50, 70 SERIES


425 Series

ITEM #	DESCRIPTION	MINOR REPAIR KIT	MAJOR REPAIR KIT
ICA300AM-2	Series 1 standard mixer; Hydrin diaphragm w/ V2-11 standard flow gas valve; Boden cable and cam, no filter or top cover	IRK300MI1/20	IRK300MA1/20
ICA300AM50-2	Series 50 standard mixer; Silicone diaphragm w/ V2-39 high flow gas valve; Boden cable and cam, no filter or top cover	IRK300MI50-2	IRK300MA50-2

425 SERIES

ITEM #	DESCRIPTION		AIR GAS VALVE ASSY
	MIXER	DIAPHRAGM	
ICT425M-2	Standard	Silicone	IAV1-16-2*
IFT425M-2	Feedback	Silicone	IAV1-1651-2
*For EC1 system use IAV1-1637-2			

When replacing a tamper-resistant IFB425M-2TP mixer on a factory converted Ford truck (1993-97 429 cubic inch engine),use an ICA425M-2 mixer and replace standard air gas valve with an IAV1-1644-2.

IMPCO CONVERTERS AND REGULATORS


J Series


L Series


E Series

J SERIES
TWO STAGE CONVERTER 100 HP

ITEM #	SECONDARY DIAPHRAGM	OUTLET PRESSURE	REPAIR KIT
IJB-2	Silicone	-1-1/2"	IRKJ-2
IJO-2	Silicone	-1/2"	IRKJ-2

COBRA SERIES
TWO STAGE CONVERTER 100 HP

ITEM #	SECONDARY DIAPHRAGM	OUTLET PRESSURE	REPAIR KIT
ICOBRA	Fluorosilicone	-1-1/2"	IRK-COBRA
ICOBRAI	Fluorosilicone	-1/2"	IRK-COBRA

E AND PEV SERIES
TWO STAGE CONVERTER 325 HP

ITEM #	SECONDARY DIAPHRAGM	OUTLET PRESSURE	REPAIR KIT
IEB-2	Silicone	-1-1/2"	IRKE-2
IEO-2	Silicone	-1/2"	IRKE-2

FUEL LOCK-OFFS AND FILTERS

AFC-111
MULTI-FUEL SHUT-OFF VALVE
1/8" FNPT Inlet and Outlet
12 Volt

AFC-152
INLINE FILTER SHUT-OFF VALVE
1/4" FNPT Inlet
1/4" MNPT Outlet
12 Volt
Replaceable filter

AFC-121 & 123
MULTI-PURPOSE SHUT-OFF VALVE
1/4" FNPT Inlet and Outlet
12 Volt

AFC-121	Straight Through
AFC-123	90° Side Inlet and Bottom Outlet

AFC-418B
FILTER LOCK-OFF VALVE
1/4" FNPT Inlet and 1/4" MNPT Outlet
12 Volt
Ceramic magnet traps fine metallic particles. High performance filtration capability with integrated 20 micron replaceable filter.

AFC-155
INLINE FILTER WITH MAGNET
1/4" FNPT Inlet
1/4" MNPT Outlet
12 Volt
Cleanable and replaceable 40 micron filter element. Bonded ceramic magnet.

AFC-156
BULKHEAD FITTING WITH FILTER
1/4" FNPT Inlet (Bottom fitting)
1/4" FNPT Outlet (Top fitting)

Replacement Filter:	AFC-156F

FUEL LOCK-OFFS AND FILTERS

Protect fuel injectors and precision components...and save!

Blue Moon®
Today's most advanced filtration system.

Blue Moon is a unique multi-stage filtration system that is designed to extract 90-97% of impurities from LPG. This innovative filter eliminates heavy ends and par-ticulates such as sulfur, metal flake, etc, protecting fuel injec-tors and precision components. Over the long haul...this means savings on replacement parts and repairs.

FST-RF6

Multi-Stage filtration for complete results...

Stage 1 ~ designed to remove and hold water, heavy oilds and particulates along with most sulfur.

Stage 2 ~ designed to remove par-ticulates and water down to a level of 20 microns.

Stage 3 ~ filtration forms larger droplets encapsulating particulate and heavy oil aerolsol droplets to a level of 10 microns.

Stage 4 ~ designed to present optimum structure of filter media. Most unwant-ed molecules have been removed in the first three stages prior to this stage, this final "micro" stage is able to work longer and more efficiently.

FST-634

Part#	Description	Flow Rate GPM	Replacement Cartridge	Replacement Filter Change-Out (gal)*
FST634	1" FPT Blue Moon Filter for LPG	50	FST-RF6	250,000

*When pressure gauge reads 15 psi differential, that indicates the need to order replacement filters. DO NOT allow differential pressure to exceed 30 psi.

C2341

12 VOLT LP FUELOCK
1/4" FNPT Inlet
1/4" MNPT Outlet

C2655

LP BULKHEAD FILTER W/ MAGNET
1/4" FNPT Inlet and Outlet
Replacement Filter Kit: C286-1798

IVFF30-2

IMPCO VACUUM FUELOCK

Vacuum fuelock and filter with silicone diaphragm.

Repair Kit:	IRK-VFF30-2
Filter Pad and Gasket:	IAF1-10
Replaceable Filter Only:	IF1-10

Please call Rutherford Equipment for all of your LP Gas Carburetion needs!

DONALDSON FILTERS

SPECIFICATIONS

Housing Diameter	4" (102mm)	5" (127mm)
LPG Filter Heads	P577043	P575844
LPG Filter Housings	P575845	P575837
LPG Particulate Filter*	P575846	P575836
Particulate Filter Efficiency	4 µ @ β 2000	
LPG Carbon Adsorbent Filter	n/a	P577040'
Connection	1" NPTF	2" NPTF
Drain Plug	1/8" NPTF	
Max. Fluid Range	60 gpm (227 lpm)	150 gpm (568 lpm)
Fluid Compatibility	Liquefied petroleum gas	
Design Pressure**	350 psi (24.1 bar)	
Rated Static Burst	2300 psi (158.6 bar)	800 psi (55.2 bar)
Material	Nickel plated steel housing and head	

* Includes Viton® replacement o-ring
** Contact Donaldson for LPG applications above 350 psi
' Coming Soon

Viton® is a registered trademark of E.I. DuPont de Nemours Company

Particulate Filter

LPG Filter Head

FEATURES

- Highly efficient filtration of 4 µ @ b 2000
- High phosphorus nickel plated steel provides corrosion resistance
- Inline porting for easy installation
- Common 1" and 2" NPT connections
- Built-in drain plug for convenient servicing
- Meets or exceeds NFPA 58 standards

For LPG Dispensers up to 150 GPM; Indoor or Outdoor

LARGE SOLENOID VALVES

High flow solenoid valves for vapor service on fixed industrial engines.

PART #	SIZE	VOLTAGE
FL-50046-008	3/4"	12V
P8215B50	1"	12V
P8223G5	3/4"	120V

VACUUM SWITCHES

1501-L

BEAM MICROVAC VACUUM SWITCH

Ultra-sensitive vacuum switch. Ideal for use in low vacuum situations.

Switch with Installation hardware:	1501-PA
Complete Repair Kit:	1501-RK
Repair Kit for Switch Only:	1501-26

MATERIAL HANDLING CONVERSION EQUIPMENT

We carry a complete selection of IMPCO conversion kits for lift trucks and other material handling applications.

ALTERNATIVE FUEL SYSTEMS

Prins

VSI

- VSI: Vapour Sequential Injection
- Fully integrated "master – slave" management system
- EOBD compatible (no signal emulation required)
- System diagnostics by monitoring vital signals and components
- Emission strategy functions for optimization
- System Communication via CAN-bus prepared
- Available for LPG and CNG configurations
- LPG performance comparable to petrol
- R67-01 and R 110 homologated
- Corrosion protected.

REDUCER

- Single Stage
- Large capacity (14gr/s)
- Stable dynamic characteristics
- Adjustable pressure range with anti-tamper seal
- Map independent system, due to excellent LFR of injector
- Map function, optional if required
- Integrated OEM coolant sensor
- Complies with R67-01 homologation with 5 bar pressure relieve valve
- Complete with electronic lock off valve, liquid filter, and magnet
- Compact design for ease of installation

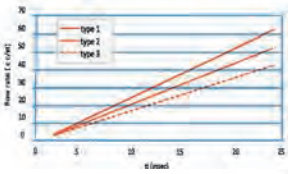

KEIHIN OEM INJECTOR

- Developed in cooperation with Prins by Keihin Corp, Japan one of the worlds leading injector manufacturer, ensuring quality and reliability
- Excellent linear flow rate (LFR = linear behavior from minimum to maximum flow)
- Linear form 2,5 ms
- Model range available to cater for small and large engine displacement
- OEM quality injectors, performance guaranteed and long durability (290 million cycles)

INJECTOR RAIL

- Uncomplicated fitting
- assembled and leak tested at factory prior to despatch
- 2/3/4/5/6 cylinder assemblies

FILTER UNIT

- Compact design with single or dual delivery outlets
- Fitted with 10-micron (ß10>75) dry gas filter protecting the fine tolerance of the injectors, form gaseous pollutants.
- Combined gaseous temperature and pressure sensor

VSI ECM

- ECM injector driver capability up to 8 cylinders
- Injector drivers based on "closed loop peak & hold current control"
- Injector diagnostics constant monitoring: - No load
  - Overload
  - Driver temperature
  - Short circuit
- Diagnostics, service and parameter load software operates from Windows 98 / 200 / XP applications
- CAN-controller (2.0b) communications possible with OEM CAN-bus
- Complete wiring harness: color coded, with text and numbering to ensure simple and efficient installation

FUEL SELECTOR SWITCH

- Small and compact design suits all cabin interiors
- Fuel select: via smart touch control, informs operator of LPG tank contents, audible buzzer to alert low level switching or fault codes, illuminated fault code warning with LED

Call to see if we have an EPA certified conversion kit for your vehicle!

RegO Repair Parts

RegO®

Kit#	Repairs	Description
R1475-80	*1475V, *1475W, *2593, *2594	Filler Kit Less Body
R19100-50B	9101P5H, *8555A, 8555D	Includes: Bonnet, Stem, O-ring & Handwheel
R19101-50	9101P5H, *8475 Series, 6542A 6543A	Complete Multibonnet Assy
R19104-50	7556 Series, *8477 Series, *8484, 8593 Series, *8594 Series, 8555R, 6532A, 6543A, 6532R, 6533R, 6542R, 6543R	Cut Off Kit: Multi Bonnet Includes Bonnet, Stem & Handwheel
R19104-80	7556 Series, *8477 Series, *8484, 8593 Series, *8594 Series, 8555R, 6532A, 6543A, 6532R, 6533R, 6542R, 6543R	Bonnet Repair Kit - Upper Packing w/ Seal Rings. For Multi Bonnet Only
R2418-51	*1475V, *1475W, *2418, *2465, *2550, *2593, *2594	Vapor Kit w/ Body
R3100-80A	*1475 Series, *2593, 2594, *3100 & *7100 Series	Cut-Off Kit
R3100-80B	*3100 * *7100 Series	Repair Kit
R3100-81K	*1475V, *1475W, *2593, *2594 *3100 & *7100 Series	Bonnet Assy, Right Hand Thread
R6542B-50	8555DL11.6, 8555D, 8555R, *8555, 6532, 6532A, 6533A, 6542A, 6543A, *6532D, *6533D *6542D, 6543D, 6532R, 6533R, 6542R, 6543R	Bonnet Assy, Top Complete
R6542B-80	8555DL11.6, *8555, *8555A, 8555D, 8555R, *8555S, 6532A, 6533A, 6542A, 6543A, *6532D, *6533D, *6542D, *6543D, 6532R, 6533R, 6542R, 6543R	Internal Repair Kit
R7141M-3	7141M	Internal Flat Washer
R7579-50	6579, 7579	Filler Kit w/ Body
R7579-80	7579, 6579	1 1/4" MNPT x 1 3/4" ACME Filler Valve Repair Kit
R7647B-80	7647SC	3/4" MNPT x 1 3/4" ACME Filler Valve Repair Kit
R8100-50	7556 Series, *8484, 8593 Series *8594 Series, *R8555	Cut-Off Kit
R8475-50	*8475 Series, *8477 Series, *8484 & 8593 Series, 8594 Series	Filler Kit w/ Body
R8475-51A	7556 Series, *8475 Series, *8477 Series, *8484, 8593 Series, *8594 Series	Vapor Kit w/ Body
R8475-80	*8475 Series, *8477 Series, *8484, 8593 Series, *8594 Series	Filler Kit Less Body
R8475-81A	7556 Series, *8475 Series, 8477 Series, 8593 Series, *8594 Series	Vapor Kit Less Body
R8545AK-KIT	8545AK	Repair Kit
R903-50	9101P5H	Repair Kit
R903-51	*8555S, *6532D, *6533D, *6542D, 6543D	Cut-Off Kit

*** Denotes Obsolete Valve**

LF1-B - 1" DELUXE PUMP KIT

KEY	DESCRIPTION	QTY
1	C407M-10-05 - INTERNAL VALVE	1
2	N10X20 - 1 1/4" X 8" NIPPLE	1
3	E10902 - 1 1/4" ELBOW	2
4	N10X100 - 1 1/4" X 3" NIPPLE	1
5	ME653S - 1" STRAINER	1
6	GC10-18" - 1 1/4" X 18" HOSE	1
7	U103 - 1 1/4" UNION	1
8	S10X08 - 1 1/4" X 1" SWAGE	1
9	1" PUMP - NOT INCLUDED	
10	H124 - HYDROSTATIC RELIEF	1
11	B08X06 - 1" X 3/4" BUSHING	1
12	ME880-6/28 -EXCESS FLOW - 3/4"	1
13	GC06-144" 3/4" X 12' HOSE ASM.	1
14	ME820-06 - 3/4" SNAP ACTION	1
15	ME111 - FILL COUPLING	1
16	MEJ400 - VENT VALVE	1
17	ME355EX18 - MPOL X 1/2" FL., E.F.	1

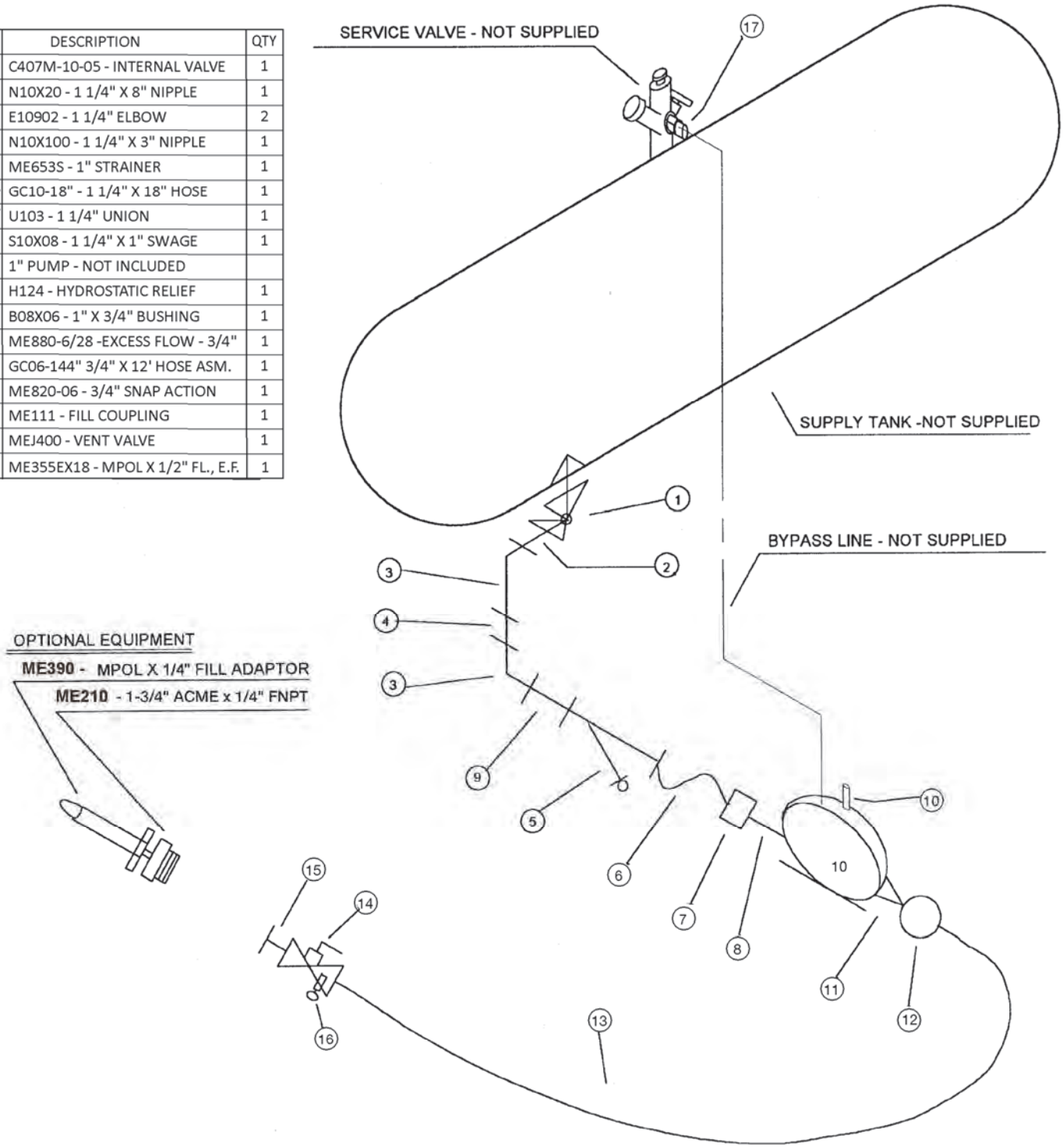

LF1-C Dispenser Connecting Kit

Key	Part	Description	Qty
1	C407-10-05	1-1/4" internal valve	1
2	N10X60	1-1/4" X 6" nipple	1
3	E10902	1-1/4" 90 deg. elbow	2
4	N10X30	1-1/4" X 3" nipple	1
5	ME653S	1-1/4" Y strainer	1
6	HP06	3/4" hex head plug	-
7	GC10-18"	1-1/4" X 18" flex hose	1
8	C103	1-1/4" coupling	1
9	S10X08	1-1/4" X 1" swage nipple	1
10	U083	1" union	1
11	ME355EX18	M.POL X 1/2 FL excess flow	1
12	48FK	1/2 FL X 3/4"MIP adapter	1
13	T062	3/4" tee	1
14	ME663	Vapor valve	1
15	B06X04	3/4" X 1/2" bushing	1
16	N04X15	1/2" X 1-1/2" nipple	1
17	J100-703	1/2" ball valve	1
18	ME141	1/2" vapor coupling	1
19	P341	Fuse latch for internal valve	1
20	ESOCABLE	Emergency pull cable	16
21	ESOHANDLE	Emergency cable handle	1
-	WIRECLIP-01	Cable clips	4

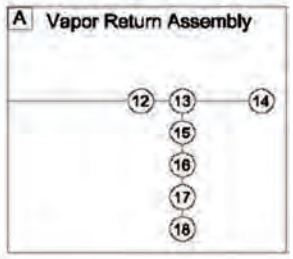

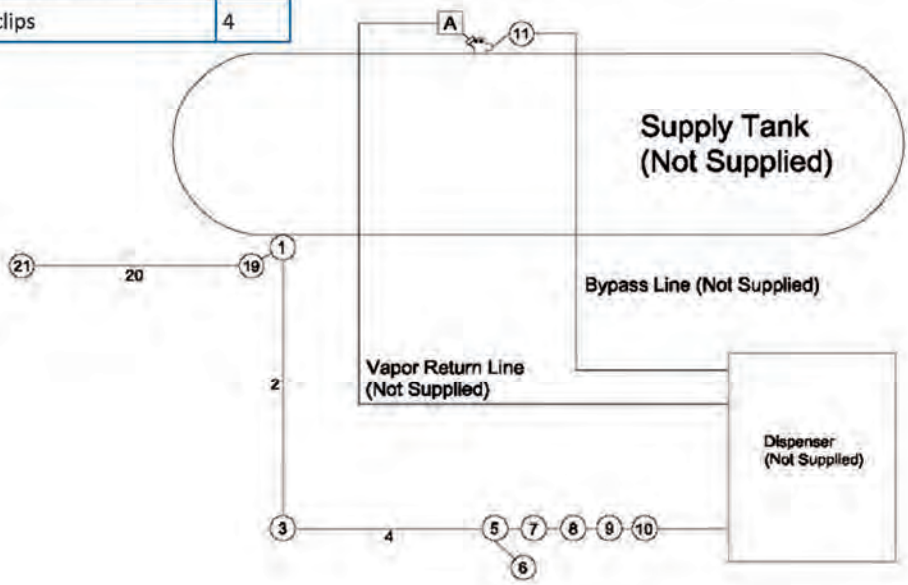

LF1-AIR Dispenser Connecting Kit

Key	Part	Description	Qty
1	C407-10-05	1-1/4" internal valve	1
2	N10X60	1-1/4" X 6" nipple	1
3	E10902	1-1/4" 90 deg. elbow	2
4	N10X30	1-1/4" X 3" nipple	1
5	ME653S	1-1/4" Y strainer	1
6	HP06	3/4" hex head plug	-
7	GC10-18"	1-1/4" X 18" flex hose	1
8	C103	1-1/4" coupling	1
9	S10X08	1-1/4" X 1" swage nipple	1
10	U083	1" union	1
11	ME355EX18	M.POL X 1/2 FL excess flow	1
12	48FK	1/2 FL X 3/4"MIP adapter	1
13	T062	3/4" tee	1
14	ME663	Vapor valve	1
15	B06X04	3/4" X 1/2" bushing	1
16	N04X15	1/2" X 1-1/2" nipple	1
17	J100-703	1/2" ball valve	1
18	ME141	1/2" vapor coupling	1
19	P389	Pneumatic actuator	1
20	WR1924-01	1/4" nylon airline	50
21	6451000	3 way air dump valve	1
-	WR1168X4	1/8" push lock fitting	2
-	WR1168X4X4	1/4" push lock fitting	2
-	WR1170-4-4	Push lock tee	1
-	WRSMPT-4	Push lock coupling	1

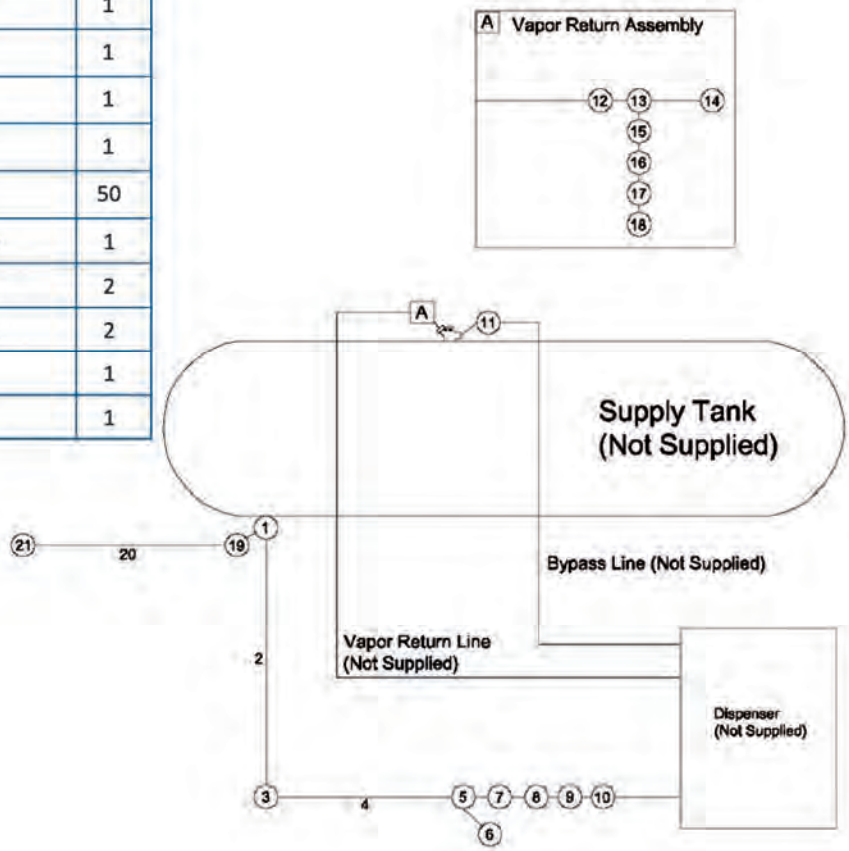

Proposed Single Bulkhead Piping Schematic

KEY	DESCRIPTION
1	LIQUID LEVEL & PRESSURE GAUGE
2	FLOAT GAUGE
3	MEJ701 THERMOMETER
4	H284-250 RELIEF VALVES WITH MEP104-24 PIPEAWAY ADAPTOR & RC300-24 RAIN CAPS
5	C477-2426 INTERNAL VALVE - 3"
6	C477-1615 INTERNAL VALVE - 2"
8	N310-24 GLOBE VALVE - 3"
9	N310-16 GLOBE VALVE - 2"
10	N310-10 GLOBE VALVE - 1 1/4"
11	G112 BACK CHECK VALVE
12	ME656SP STRAINER - 3'
13	LF24X240 3" X 24" FLEX CONNECTOR
14	LGLD3F-VB BLACKMER PUMP UNIT - 3"
15	BV-2-30 BYPASS - 2"
16	F195 EXCESS FLOWVALVE - 3" X 2"
17	N551-16 FISHER E.S.V. - 2"
19	G201-24 FISHER BACK CHECK
20	GC10-15' 1 1/4" X 15' HOSE ASSEMBLY
21	GC16-15' 2" X 15' HOSE ASSEMBLY
22	ME112 ADAPTER WITH ME179 ACME PLUG & MEP148 CHAIN

KEY	DESCRIPTION
23	ME130 ADAPTER WITH ME181 ACME PLUG & MEP183 CHAIN
24	ME217 ADAPTER WITH ME229-1 ACME CAP & CHAIN
25	ME262 ADAPTER WITH ME441 ACME CAP & MEP167 CHAIN
N/S	HYDROSTATIC RELIEF VALVE AS REQUIRED STH24X16X16
	ADDITIONAL EQUIPMENT
5/6/7	INTERNAL VALVES & ACCESSORIES
5/6	P639 PNEUMATIC OPERATOR P340 LATCH & REMOTE RELEASE
5/6/7	SEE PAGE 24-39 FOR MORE ON INTERNAL VALVES
17/18	N550 ESV'S P539 PNEUMATIC OPERATOR, P327D PNEUMATIC RELEASE, SEE PAGES 40-43 FOR MORE INFORMATION
14	MOTORS 7 STARTERS, SEE PAGES 336-339 FOR MORE INFORMATION

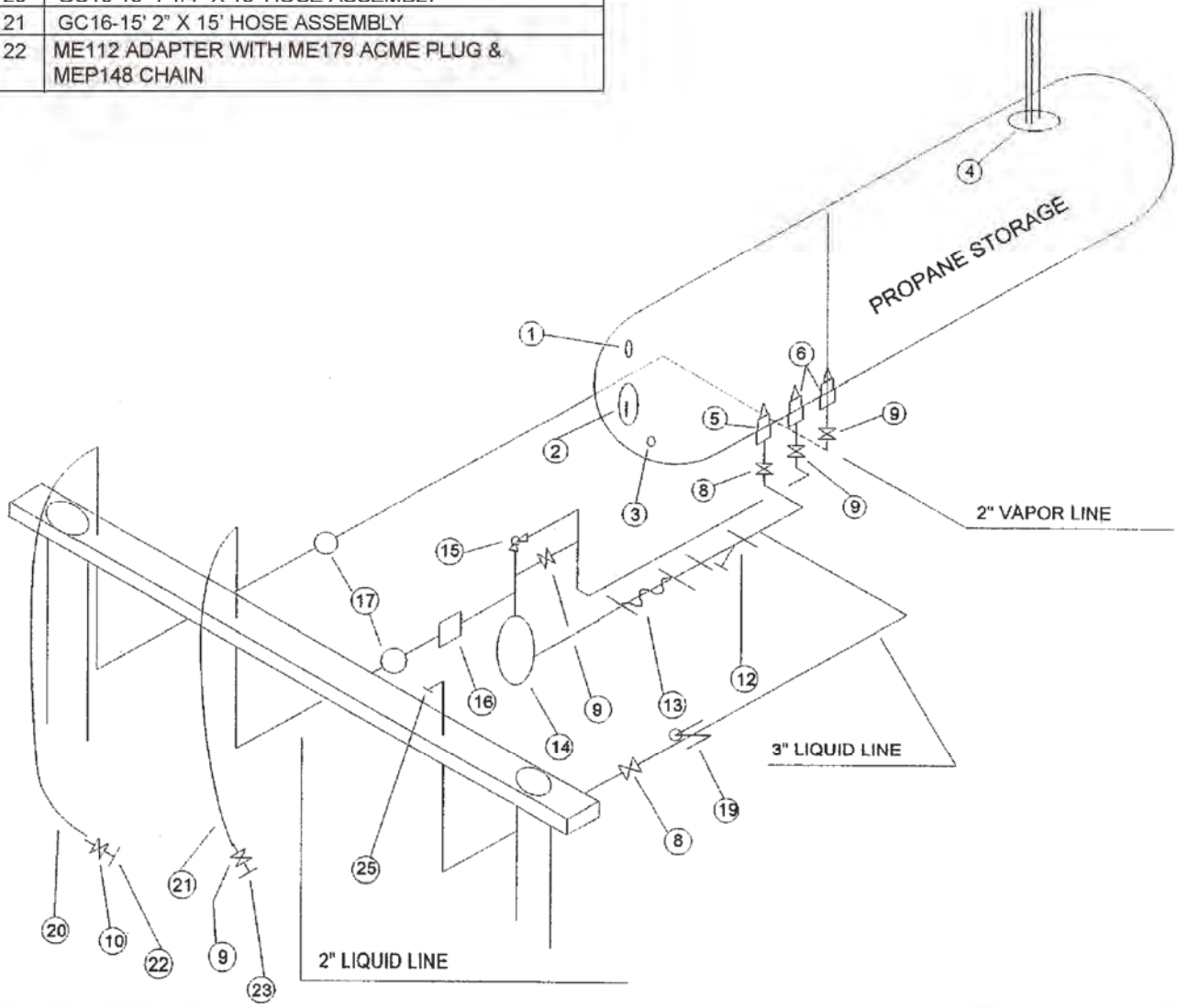

Proposed Double Bulkhead Piping Schematic

KEY	DESCRIPTION
1	LIQUID LEVEL & PRESSURE GAUGE
2	FLOAT GAUGE
3	MEJ701 THERMOMETER
4	H284-250 RELIEF VALVES WITH ME-P104-24 PIPEAWAY ADAPTER & RC300-24 RAIN CAPS
5	C477-2426 INTERNAL VALVE - 3"
6	C477-1615 INTERNAL VALVE - 2"
8	N310-24 GLOBE VALVE - 3"
9	N310-16 GLOBE VALVE - 2"
10	N310-10 GLOBE VALVE - 1 1/4"
12	ME656SP STRAINER - 3'
13	LF24X240 3" X 24" FLEX CONNECTOR
14	LGLD3F-VB BLACKMER PUMP UNIT - 3"
15	BV-2-30 BYPASS - 2"
16	F195 EXCESS FLOW VALVE - 3" X 2"
17	N551-16 FISHER E.S.V. - 2"
19	G201-24 FISHER BACK CHECK
20	GC10-15' 1 1/4" X 15' HOSE ASSEMBLY
21	GC16-15' 2" X 15' HOSE ASSEMBLY
22	ME112 ADAPTER WITH ME179 ACME PLUG & MEP148 CHAIN

KEY	DESCRIPTION
23	ME130 ADAPTER WITH ME181 ACME PLUG & MEP183 CHAIN
24	ME217 ADAPTER WITH M229-1 ACME CAP & CHAIN
25	ME262 ADAPTER WITH ME441 ACME CAP & P167 CHAIN
N/S	HYDROSTATIC RELIEF VALVE AS REQUIRED, BULKHEAD OPTIONAL
	ADDITIONAL EQUIPMENT
5/6/7	INTERNAL VALVES & ACCESSORIES
5/6	P639 PNEUMATIC OPERATOR P340 LATCH & REMOTE RELEASE
5/6/7	SEE PAGES 24-39 FOR MORE ON INTERNAL VALVES
17/18	N550 ESV'S P539 PNEUMATIC OPERATOR, P327D PNEUMATIC RELEASE, SEE PAGES 40-43 FOR MORE ON ESV'S
14	MOTORS & STARTERS, SEE PAGES 336-339 FOR MORE INFO

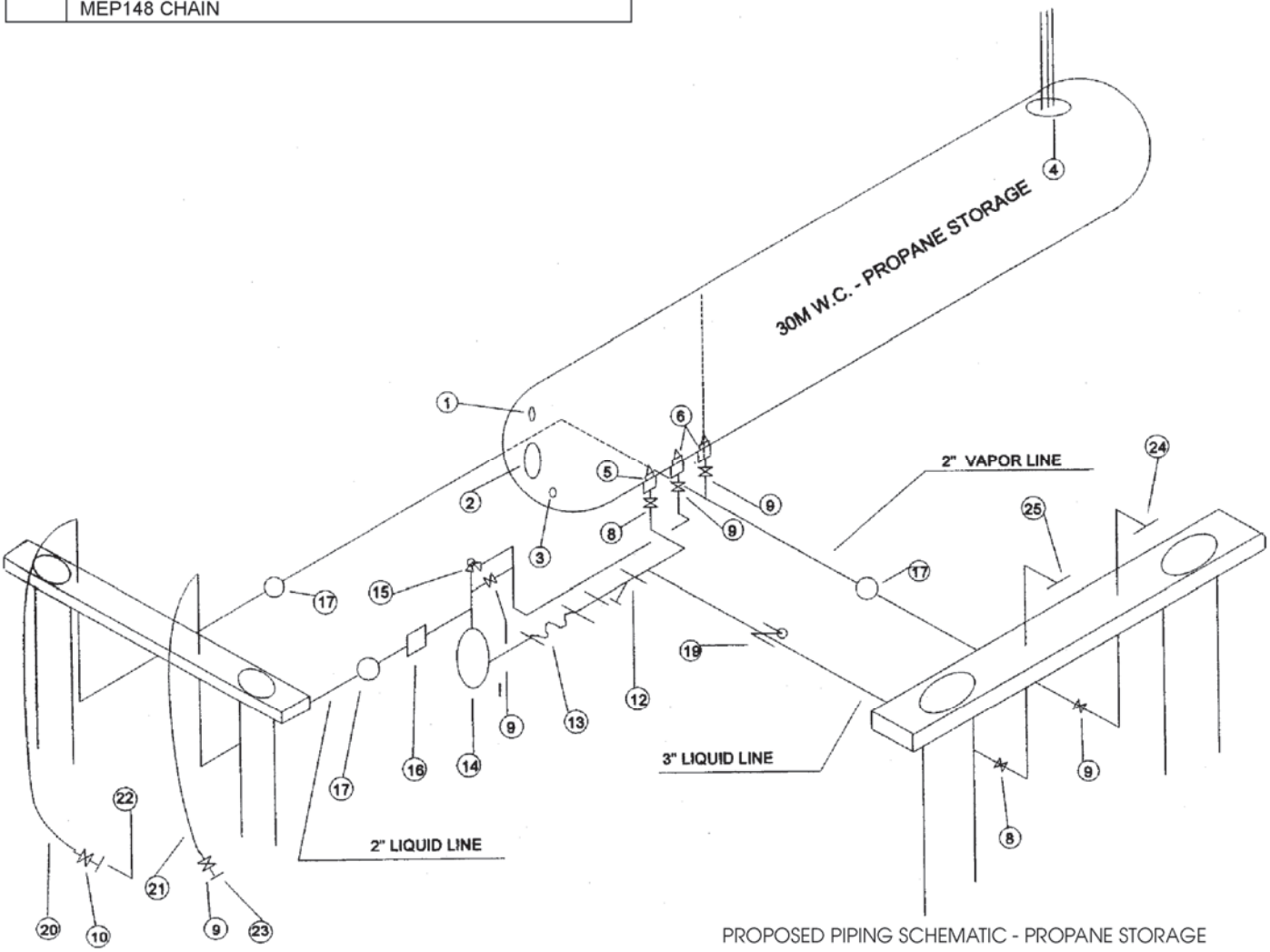

PROPOSED PIPING SCHEMATIC - PROPANE STORAGE

TECHNICAL REFERENCES

Conversion Factors

SI Conversion Factors

Multiply	By	To Obtain
Length and Area		
Millimeters	0.0394	Inches
Meters	3.2808	Feet
Sq. Centimeters	0.155	Sq. Inches
Sq. Meters	10.764	Sq. Feet
Volume and Mass		
Cubic Meters	35.315	Cubic Feet
Liters	0.0353	Cubic Feet
Gallons	0.1337	Cubic Feet
Cubic cm.	0.061	Cubic Inches
Liters	2.114	Pints (US)
Liters	0.2642	Gallons (US)
Kilograms	2.2046	Pounds
Tonnes (metric)	1.1024	Tons (US)
Pressure and Flow Rate		
Millibars	0.4018	Inches WC
Ounces/sq. in.	1.733	Inches WC
Inches w.c.	0.0361	Pounds/sq. in.
Bars	14.50	Pounds/sq. in.
Kilopascals	0.1450	Pounds/sq. in.
Kilograms/sq. cm.	14.222	Pounds/sq. in.
Pounds/sq. in.	0.068	Atmospheres
Liters/hr.	0.0353	Cubic Feet/hr.
Cubic Meters/hr	4.403	Gallons/min.
Miscellaneous		
Kilojoules	0.9478	BTU
Calories, kg	3.968	BTU
Watts	3.414	BTU per hour
BTU	0.00001	Therms
Megajoules	0.00948	Therms

ASME Conversion Factors

Multiply	By	To Obtain
Length and Area		
Inches	25.4	Millimeters
Feet	0.3048	Meters
Sq. Inches	6.4516	Sq. Centimeters
Sq. Feet	0.0929	Sq. Meters
Volume and Mass		
Cubic Feet	0.0283	Cubic Meters
Cubic Feet	28.316	Liters
Cubic Feet	7.481	Gallons
Cubic Inches	16.387	Cubic cm.
Pints (US)	0.473	Liters
Gallons (US)	3.785	Liters
Pounds	0.4535	Kilograms
Tons (US)	0.9071	Tonnes (metric)
Pressure and Flow Rate		
Inches w.c.	2.488	Millibars
Inches w.c.	0.577	Ounces/sq. in.
Pounds/sq. in.	27.71	Inches WC
Pounds/sq. in.	0.0689	Bars
Pounds/sq. in.	6.895	Kilopascals
Pounds/sq. in.	0.0703	Kilograms/sq. cm.
Atmospheres	14.696	Pounds/sq. in.
Cubic Feet/hr.	28.316	Liters/hr.
Gallons/min.	0.2271	Cubic Meters/hr.
Miscellaneous		
BTU	1.055	Kilojoules
BTU	0.252	Calories, kg
BTU per hour	0.293	Watts
Therms	100,000	BTU
Therms	105.5	Megajoules

Abbreviations

ASME	American Society of Mechanical Engineers
BTU per hour	British Thermal Units per Hour
CFH	Cubic Feet per Hour
CGA	Compressed Gas Association
CSST	Corrugated Stainless Steel Tubing
DBC	Diameter Bolt Circle
DOT	Department of Transportation
FNPT	Female National Pipe Thread
FPOL	Female POL Portion of CGA 510 Fitting (See POL)
GPH	Gallons per Hour
GPM	Gallons per Minute
MNPT	Male National Pipe Thread
MPOL	Male POL Portion of CGA 510 Fitting (See POL)
NFPA	National Fire Protection Association
NPT	National Pipe Thread
POL	Generic Term For A Compressed Gas Association Fitting #510
psi	Pounds per Square Inch
psid	Pounds per Square Inch, Differential Pressure
psig	Pounds per Square Inch Gauge
SAE	Society of Automotive Engineers
SCFH	Standard Cubic Feet per Hour
SCFM	Standard Cubic Feet per Minute
SCMH	Standard Cubic Meter per Hour
PTFE	Polytetrafluoroethylene
UL	Underwriters Laboratories Inc.
UNC	Unified National Course (Defines a thread form/shape)
UNF LH	Unified National Fine - Left Hand (Defines a thread form/shape)
WC	Water Column
WOG	Water Oil and Gas

BASIC FACTS

	PROPANE	BUTANE		PROPANE	BUTANE
Formula	C_3H_8	C_4H_{10}	Octane number (Iso-Octane 100)	125	91
Boiling point, °F, at					
atmospheric pressure	-44	31	COMBUSTION DATA:		
Specific gravity of gas			Cu. ft. air required to		
(Air=1) at 60° F, atmospheric pressure	1.53	2.00	burn 1 cu. ft. gas	23.5	30.0
Specific gravity of liquid (Water=1)	0.51	0.58	Ignition Temperature	920-1020	900-1000
Weight per gallon of liquid at 60° F, Lbs.	4.23	4.87	Maximum flame	3600	3625
BTU per gallon (Vaporized)	91,500	102,600	LIMITS OF INFLAMMABILITY: (%OF GAS IN AIR MIXTURE)		
BTU per pound (Vaporized)	21,560	21,180	% at lower limit	2.4	1.9
BTU per cubic foot (Vaporized)	2,500	3,175	% at upper limit	9.5	8.5
Cu. ft. of gas/gallon of liquid at 60° F,	36.5	31.0			
atmospheric pressure					
Cu. ft. of gas/lb. of liquid at 60° F,	8.55	6.51			
atmospheric pressure					

TO CONVERT FLOW CAPACITIES OF ONE KIND OF GAS TO FLOW CAPACITIES OF A DIFFERENT KIND OF GAS

If you have a flow capacity (CFH, etc.) in NATURAL GAS and want to know equivalent flow capacity of:		Multiply by:	If you have BUTANE and want to know equivalent flow capacity of:		Multiply by:
	Propane	0.63		Propane	1.15
	Butane	0.55		Natural Gas	1.83
	Air	0.77		Air	1.42
If you have AIR and want to know equivalent flow capacity of:		Multiply by:	If you have PROPANE and want to know equivalent flow capacity of:		Multiply by:
	Propane	0.81		Natural Gas	1.59
	Butane	0.71		Butane	0.87
	Natural Gas	1.29		Air	1.23

COPPER TUBING SIZING BETWEEN 1ST & 2ND STAGE REGULATORS

Maximum propane capacities listed are based on a 10 psig first stage setting and a 1 psig pressure drop. Capacities in 1,000 BTU/HR.

Tubing Length (Ft.)	REFRIGERATION TUBING				
	3/8" OD	1/2" OD	5/8" OD	3/4" OD	7/8" OD
30	299	726	1367	2329	3394
40	256	621	1170	1993	2994
50	227	551	1037	1766	2574
60	206	499	939	1600	2332
70	189	459	864	1472	2146
80	176	427	804	1370	1996
90	165	401	754	1285	1873
100	156	378	713	1214	1769
150	125	304	572	975	1421
200	107	260	490	834	1216
250	95	230	434	739	1076
300	86	209	393	670	976

To convert to capacities at 5 psig setting with 10% (0.5 psig) pressure drop. multiply values by 0.606.
To convert to capacities at 15 psig setting with 10% (1.5 psig) pressure drop. multiply values by 1.380.

PIPE SIZING
BETWEEN FIRST STAGE AND SECOND STAGE REGULATORS

Maximum propane capacities listed are based on a 10 psig first stage setting and 1 psig pressure drop.

Capacities in 1,000 BTU/HR

NOMINAL PIPE SIZE, SCHEDULE 40

LENGTH IN FEET	1/2" 0.622	3/4" 0.824	1" 1.049	1 1/4" 1.38	1 1/2" 1.61	2" 2.067	3" 3.068
30	1843	3854	7259	14904	22331	43008	121180
40	1577	3298	6213	12756	19113	36809	103714
50	1398	2923	5507	11306	16939	32623	91920
60	1267	2649	4989	10244	15348	29559	83286
70	1165	2437	4590	9424	14120	27194	76622
80	1084	2267	4270	8767	13136	25299	71282
90	1017	2127	4007	8226	12325	23737	66882
100	961	2009	3785	7770	11642	22422	63176
150	772	1613	3039	6240	9349	18005	50733
200	660	1381	2601	5340	8002	15410	43421
250	585	1224	2305	4733	7092	13658	38483
300	530	1109	2089	4289	6426	12375	34868
350	488	1020	1922	3945	5911	11385	32078
400	454	949	1788	3670	5499	10591	29843
450	426	890	1677	3444	5160	9938	28000
500	402	841	1584	3253	4874	9387	26449
600	364	762	1436	2948	4416	8505	23965
700	335	701	1321	2712	4063	7825	22047
800	312	652	1229	2523	3780	7279	20511
900	293	612	1153	2367	3546	6830	19245
1000	276	578	1089	2236	3350	6452	18178
1500	222	464	875	1795	2690	5181	14598
2000	190	397	748	1537	2302	4434	12494

TO CONVERT TO CAPACITIES AT 5 PSIG SETTING WITH 10% (.5PSIG) PRESSURE DROP, MULTIPLY VALUES BY 0.606.

TO CONVERT TO CAPACITIES AT 15 PSIG SETTING WITH 10% (1.5PSIG) PRESSURE DROP, MULTIPLY VALUES BY 1.380.

PIPE AND TUBING SIZING
SIZING BETWEEN SECOND STAGE REGULATOR AND APPLIANCE

*Maximum propane capacities listed are based on a 1/2" W.C. PRESSURE DROP AT 11" W.C. SETTING - CAPACITIES IN 1,000 BTU/HR

PIPE AND TUBING LENGTH IN FEET	COPPER TUBING SIZE, O.D., TYPE L						NORMAL PIPE SIZE, SCHEDULE 40 PIPE								
	3/8"	1/2"	5/8"	3/4"	7/8"	1 1/8"	1/2"	3/4"	1"	1 1/4"	1 1/2"	2"	2 1/2"	3"	4"
10	39	92	199	329	501	935	275	567	1071	2205	3307	6221	10140	17990	36710
20	26	62	131	216	346	630	189	393	732	1496	2299	4331	7046	12510	25520
30	21	50	107	181	277	500	152	315	590	1212	1858	3465	5695	10110	20620
40	19	41	90	145	233	427	129	267	504	1039	1559	2992	4778	8481	17300
50	18	37	79	131	198	376	114	237	448	913	1417	2646	4343	7708	15730
60	16	35	72	121	187	340	103	217	409	834	1275	2394	3908	6936	14150
80	13	29	62	104	155	289	89	185	346	724	1086	2047	3329	5908	12050
100	11	26	55	90	138	255	78	162	307	630	976	1811	2991	5309	10830
125	10	24	48	81	122	224	69	146	275	567	866	1606	2654	4711	9613
150	9	21	43	72	109	202	63	132	252	511	787	1496	2412	4281	8736
200	8	19	39	66	100	187	54	112	209	439	665	1282	2038	3618	7382
250	8	17	36	60	93	172	48	100	185	390	590	1138	1808	3210	6549
300					43	90	168	353	534	1030	1637	2905	5927		
350					40	83	155	325	491	947	1505	2671	5450		
400					37	77	144	303	458	883	1404	2492	5084		

POLYETHYLENE PIPE AND TUBING (PE 2406/YELLOW)
LINE SIZING CHART FOR LP GAS VAPOR

Line sizing for LP gas vapor between 1st and 2nd stage regulators allowing a pressure drop of 1 psi at 10 psi setting.

TUBING LENGTH (FT)*	1/2" CTS SDR7 (.090")	1/2" IPS SDR 9.3(.090")	3/4" IPS SDR 11(.095")	1" CTS SDR 11.5(.099")	1" IPS SDR 11 (.119")	1-1/4" IPS SDR 10 (.166")	2" IPS SDR 11 (.216")
10	1406	4235	8940	10803	16486	28912	82488
20	944	2843	6001	7252	11067	19409	55373
30	747	2252	4753	5744	8766	15372	43858
40	634	1908	4029	4868	7429	13029	37171
50	557	1679	3544	4282	6535	11460	32695
60	502	1512	3191	3856	5884	10319	29441
70	459	1383	2920	3529	5385	9444	26944
80	425	1281	2704	3268	4987	8746	24953
90	397	1197	2527	3054	4661	8173	23319
100	374	1127	2379	2874	4287	7693	21948
125	329	991	2092	2528	3858	6766	19305
150	296	893	1884	2277	3474	6093	17384
175	271	817	1724	2084	3180	5576	15909
200	251	756	1597	1930	2945	5164	14733
225	235	707	1492	1803	2752	4826	13768
250	221	665	1405	1697	2590	4542	12959
275	209	630	1330	1607	2452	4300	12268
300	199	599	1265	1528	2332	4090	11669
350	182	548	1157	1399	2134	3743	10680
400	169	508	1072	1295	1976	3467	9890

* Total length of piping from outlet of first stage regulator to inlet of farthest second stage regulator.

NOTE: Polyethylene pipe/tubing shall be limited to vapor service, not exceeding 30 psig, and must be installed outdoors and underground.
The above numbers were calculated by using the Mueller formula for high pressure installations of smooth pipe such as plastic, copper, brass, etc. carrying gas at pressures greater than 1 psig.

2 PSI SIZING CHART
COPPER TUBING AND STEEL PIPE SIZING

Maximum Capacity of Pipe and Tubing in 1000's BTU of Gas/hr. for Gas Inlet Pressure of 2 PSIG and a Pressure Drop of 1PSIG.

Size of Pipe or Copper Tubing		**Length of Pipe or Tubing**									
		10'	**20'**	**30'**	**40'**	**50'**	**60'**	**70'**	**80'**	**90'**	**100'**
Copper Tubing (O.D.)	3/8"	451	310	249	213	189	171	157	146	137	130
	1/2"	1020	701	563	482	427	387	356	331	311	294
	5/8"	1900	1306	1049	898	795	721	663	617	579	547
	3/4"	3215	2210	1774	1519	1346	1219	1122	1044	979	925
Pipe Size	1/2"	2687	1847	1483	1269	1125	1019	938	872	819	773
	3/4"	5619	3862	3101	2654	2352	2131	1961	1824	1712	1617
	1"	10585	7275	5842	5000	4431	4015	3694	3436	3224	3046
	1 1/4"	21731	14936	11994	10265	9098	8243	7584	7055	6620	6253
	1 1/2"	32560	22378	17971	15381	13632	12351	11363	10571	9918	9369
	2"	62708	43099	34610	29621	26253	23787	21884	20359	19102	18043

INDEX

A

B

B CONT'D

C

C CONT'D

D

E

INDEX

E CONT'D

F

F CONT'D

G

H

H CONT'D

I

J

K

L

INDEX

M

N

O

P

P CONT'D

Q

R

R CONT'D

S

T

INDEX

T CONT'D

U

V

V CONT'D

W

Y

1. **APPROVED CREDIT** must be established for open account status. Until established, all shipments will be C. O. D. or be charged to a credit card.

2. **TERMS OF PAYMENT** - Net 30 days from the date of invoice. Interest of 3/4% per month will be added to all overdue invoices.

3. **PRICING** - Prices are subject to change without notice. All orders will be billed at current prices on the date of shipment.

4. **FREIGHT** - All shipments will be via FedEx,UPS or motor freight. A two dollar box/handling charge will be added to UPS shipments. Motor freight shipments will be prepaid and added to the invoice. A surcharge of 10% (maximum of $10.00) will be added to freight charges for handling the payment of freight. Motor freight shipments can be shipped freight collect if so requested.

5. **MINIMUM ORDER** - All orders are subject to a $20.00 minimum. Orders for less than $20.00 will be increased with the same product to reach the minimum.

6. **DAMAGED SHIPMENTS** - Merchandise properly packed and delivered to freight carrier releases Rutherford Equipment from all responsibility. Claims for damaged shipments are the responsibility of and must be filed by the consignee against the carrier. Please inspect all shipments before signing for your merchandise.

7. **RETURNS** - All returns must be approved in advance and issued an RGA number. A restocking fee may be charged.

8. **WARRANTY** - All products are warranted by their manufacturer. Rutherford Equipment will return defective merchandise to the manufacturer for credit consideration. Rutherford Equipment does not supplement or extend a manufacturer's warranty. The manufacturer makes final decisions on warranty claims.

9. **TAX** - Any state or federal tax levied against the net sale price is an additional charge to be assumed and paid by the purchaser.

10. **EXPORT** - All pricing and quotes are in U. S. dollars unless otherwise stated in writing. The purchaser must pay all duties, taxes and exchange rate in currency.

11. **DEBITS** - No debit memorandum will be accepted. Rutherford Equipment will issue prompt credit on all authorized returns in compliance with our Return Merchandise Policy.

12. **SPECIAL ORDERS** - Orders for special products, not considered by Rutherford Equipment as a stocked product, are noncancelable and nonreturnable unless agreed to in advance by our supplier.

13. **SPECIAL HANDLING** - A minimum charge of $30.00 will be added to any order which must be delivered by Rutherford Equipment to the airport or other point of special shipment.

Rutherford
EQUIPMENT • QUALITY GAS PRODUCTS

Proudly representing these quality manufacturers

EQUIPMENT

FISHER
Blackmer
MEC
Algas-SDI
cavagna group
TracPipe Flexible Gas Piping by Omega Flex
CounterStrike For Enhanced Lightning Protection by TracPipe
Dormont
Dwyer
elster Perfection
enerco
Cardinal DETECTO
Blue Moon Today's most advanced filtration system.
FLAME ENGINEERING, INC. Red Dragon Torch
Goodall
Donaldson FILTRATION SOLUTIONS
Hannay Reels The reel leader
Sumter Coatings
IMPCO
Jomar VALVE
Liqua-Tech
MANCHESTER TANK SINCE 1946
BASE ENGINEERING INC. FUEL TRANSFER AUTOMATION
MID:COM Improves Accuracy & Efficiency
Parafour Innovations, LLC
Prins ALTERNATIVE FUEL SYSTEMS
QUALITY STEEL Because Quality Steel Means Quality Tanks
RANSOME MANUFACTURING
RED SEAL MEASUREMENT
SENSIT Technologies
Smart-Hose TECHNOLOGIES
Kam Co We've got you covered.
LIFT
CLEANFUEL USA
UEI TEST INSTRUMENTS

CONSUMER PRODUCTS

realfyre PREMIUM GAS LOGS
FIREMAGIC SAVOR THE MOMENT
AOG AMERICAN OUTDOOR GRILL
AMERICAN FYRE DESIGNS by R H Peterson Co.
firegear Outdoors A DIVISION OF SKYTECH PRODUCTS GROUP
NAPOLEON
MHP Outdoor Grills
Summerset PROFESSIONAL GRILLS
DuraVent Member of M&G Group
MEMPHIS WOOD FIRE GRILLS
GB
SKYTECH Wireless Control Systems
MASON-LITE
HEATSTAR by ENERCO
Stellar hearth products
Amantii

GA: 800-241-5652 • FL: 800-432-1869 • NC: 800-426-9293
sales@rutherfordequipment.com • www.rutherfordequipment.com