# LLOYD INDUSTRIES INC.



Fire Dampers, Combination Fire/Smoke Dampers,
Air Control Dampers, Ceiling Radiation Dampers, Access Doors,
Louvers, Brick Vents, Backdraft Dampers, & More


231 Commerce Dr.
Montgomeryville, PA 18936
Tel: 215-412-4445
Fax: 215-412-4409
Email: lloydind@firedamper.com

138 Industrial Loop West
Orange Park, FL 32073
Tel: 904-541-1655
Fax: 904-541-1657
Email: lloydind1@firedamper.com

B1, 4/F., Luen Ming Hing Factory Building
36 Mook Cheong St.
To Kwa Wan, Kowloon, H.K.
Tel: 852-2760-4188
Fax: 852-2760-4177
Email: tatanlexyim@lloydasia.com

www.firedamper.com

# Contents


| | Page No. |
|---|---|
| **Fire Damper** | |
| 75AV/AH(1-1/2 HR Rating) | 8 |
| 75BV/BH(1-1/2 HR Rating) | 9 |
| 75C/CR/CO (1-1/2 HR Rating) | 10 |
| 75DV/DH (1-1/2 HR Rating) | 11 |
| 75DB (1-1/2 HR Rating) | 12 |
| 75L (3 HR Rating) | 13 |
| 75LB (3HR Rating) | 14 |
| 75LC/LCR/LCO (3HR Rating) | 15 |
| 75N (3HR Rating) | 16 |
| 75NB (3HR Rating) | 17 |
| **Fire Damper Sizing Chart** | |
| Pan Sizing Chart | 18-19 |
| Standard Sizing Chart for 75C, CR, CO | 20-22 |
| **Dynamic Fire Damper** | |
| 75A-DY (1-1/2 HR Rating) | 23 |
| 75B-DY (1-1/2 HR Rating) | 24 |
| 75C-DY (1-1/2 HR Rating) | 25 |
| 75CO-DY (1-1/2 HR Rating) | 26 |
| 75CR-DY (1-1/2 HR Rating) | 27 |
| 75D-DY (1-1/2 HR Rating) | 28 |
| 75DB-DY (1-1/2 HR Rating) | 29 |
| 75L-DY (3 HR Rating) | 30 |
| 75LB-DY (3 HR Rating) | 31 |
| 75LC-DY (3 HR Rating) | 32 |
| 75LCO-DY (3 HR Rating) | 33 |
| 75LCR-DY (3 HR Rating) | 34 |
| 75N-DY (3 HR rating) | 35 |
| 75NB-DY (3 HR rating) | 36 |
| 75ETL (electro-thermal link) | 37 |
| FD-111-PB | 38 |


231 Commerce Dr. Montgomeryville, PA 18936
Tel: 215-412-4445 Fax: 215-412-4409
Email: lloydind@firedamper.com

138 Industrial Loop West, Orange Park, FL 32073
Tel: 904-541-1655 Fax: 904-541-1657
Email: lloydind1@firedamper.com

B1, 4/F., Luen Ming Hing Factory Building
36 Mok Cheong St.,
To Kwa Wan, Kowloon, H. K.
Tel: 852-2760-4188 Fax: 852-2760-4177
Email: tatanlexyim@lloydasia.com

Website: www.firedamper.com

*ALL STATED SPECIFICATIONS ARE SUBJECT TO UPDATE WITHOUT NOTICE OR OBLIGATION.



Lloyd Industries Inc. 2017

# Contents


| | Page No. |
|---|---|
| **Sleeves and Accessories for Fire Damper** | |
| 75C/CR/CO | 39 |
| 75A/AF/B/B-1 | 40 |
| Other Accessories | 41 |
| **Combination Fire Smoke Damper** | |
| FSD-111-1-PB (Ultra Low Leakage) | 42 |
| FSD-111-2-PB (Low Leakage) | 43 |
| FSDL-111-1-PB (Front Access) | 44-45 |
| FSD-111-1-GA-PB (GRILL ACCESS) | 46 |
| Damper Sizing | 47-48 |
| FSD/CFSD Allowable Leakage Classification | 49 |
| FSD Performance Data | 50 |
| Lloydstat | 51-52 |
| Sleeve Transition Information | 53-54 |
| **Actuator for Damper** | |
| FSD-111, CFSD-222, SD-333 | 55-56 |
| **Fire Smoke Damper with Detector** | |
| FSD-111-1-PB-D4120 | 57-58 |
| FSD-111-1-PB-B114LP | 59-60 |
| **Corridor Combination Fire Smoke Damper** | |
| CF SD 222-1-PB (Ultra Low Leakage) | 61 |
| CF SD 222-2-PB (Low Leakage) | 62 |
| Fusible Link Re-install Directions | 63 |
| **Smoke Damper** | |
| SD 333-1 PB (Ultra Low Leakage) | 64 |
| SD 333-2 PB (Low Leakage) | 65 |


231 Commerce Dr. Montgomeryville, PA 18936
Tel: 215-412-4445 Fax: 215-412-4409
Email: lloydind@firedamper.com

138 Industrial Loop West, Orange Park, FL 32073
Tel: 904-541-1655 Fax: 904-541-1657
Email: lloydind1@firedamper.com

B1, 4/F., Luen Ming Hing Factory Building
36 Mok Cheong St.,
To Kwa Wan, Kowloon, H. K.
Tel: 852-2760-4188 Fax: 852-2760-4177
Email: tatanlexyim@lloydasia.com

Website: www.firedamper.com

*ALL STATED SPECIFICATIONS ARE SUBJECT TO UPDATE WITHOUT NOTICE OR OBLIGATION.



Lloyd Industries Inc. 2017

# Contents


| | Page No. |
|---|---|
| **Air Control Damper** | |
| AC-10, AC-20 | 66 |
| AC-10, AC-20 (with flanged frame) | 67 |
| AC-10,AC-20 Leakage and Pressure Drop Data | 68 |
| **Actuator for Air Control Damper** | |
| AC-10, AC-20 | 69-71 |
| **Air Control Damper/ Louver Combo** | |
| 2"Deep 2-SRF &2-SRCF Louver | 72 |
| 4"Deep 4-SRF &4-SRCF,4-DL, 4-DLF Louver | 73 |
| 6"Deep 6-DL, 6-DLF Drainable Louver | 74 |
| Assembly of Air Control Damper and Louver | 75-76 |
| Types of Extended Shaft & Bearing Bracket | 77 |
| Actuator on Air Control Damper | 78 |
| **Air Control Damper** | |
| AC-10 Single Blade | 79 |
| AC-10, AC-20 Jumper Bracket | 80-81 |
| AC-10-AF, AC-20-AF | 82 |
| AC-10-AF, AC-20-AF Leakage and Pressure Drop Data | 83-84 |
| Sleeve Transition Information | 85 |
| AC-30 | 86 |
| AC-40 | 87 |
| **Ceiling Radiation Damper** | |
| 50 (Rectangular) | 88 |
| 50EA (Rectangular) | 89 |
| 55 (Round) | 90 |
| 55EA (Round) | 91 |
| 50-4X (Rectangular) | 92 |
| 50-6X (Rectangular) | 93 |
| 45-LT | 94 |
| 45-LTD (Thin Line) | 95 |


231 Commerce Dr. Montgomeryville, PA 18936
Tel: 215-412-4445 Fax: 215-412-4409
Email: lloydind@firedamper.com

138 Industrial Loop West, Orange Park, FL 32073
Tel: 904-541-1655 Fax: 904-541-1657
Email: lloydind1@firedamper.com

B1, 4/F., Luen Ming Hing Factory Building
36 Mok Cheong St.,
To Kwa Wan, Kowloon, H. K.
Tel: 852-2760-4188 Fax: 852-2760-4177
Email: tatanlexyim@lloydasia.com

Website: www.firedamper.com

*ALL STATED SPECIFICATIONS ARE SUBJECT TO UPDATE WITHOUT NOTICE OR OBLIGATION.



Lloyd Industries Inc. 2017

# Contents


| | Page No. |
|---|---|
| **CRD-Boot for register box ASM.** | |
| Boot Clip for Ceiling Radiation Dampers | 96 |
| CRD-50-95-BT & CRD-50-EA-95-BT | 97 |
| CRD-50-96-BT & CRD-50-EA-96-BT | 98 |
| CRD-50-98-BT & CRD-50-EA-98-BT | 99 |
| **CRD with Fire Rated Fiberglass Plenum Box/ Register Box** | |
| K-CRD50-FGPB-4.2 & K-CRD50-EA-FGPB-4.2 | 100 |
| K-CRD50-FGPB-6.0 & K-CRD50-EA-FGPB-6.0 | 101 |
| CRD50-BT-6.0 & CRD50-EA-BT-6.0 | 102 |
| CRD55-BT-6.0 & CRD55-EA-BT-6.0 | 103 |
| CRD55-BT-4.2-45 & CRD55-EA-BT-4.2-45 | 104 |
| CRD55-BT-6.0-45 & CRD55-EA-BT-6.0-45 | 105 |
| CRD50-NI-BT-26GS & CRD50-NI-BT-26GS-EA | 106 |
| CRD50-NI-BT-26GT & CRD50-NI-BT-26GT-EA | 107 |
| CRD4X-NI-BT-26GS | 108 |
| CRD6X-NI-BT-26GS | 109 |
| **Chart & Table** | |
| UL Floor-Ceiling Comparison Chart | 110 |
| Plenum Box & Duct Sizing Table | 111-115 |
| **Ceiling Thermal Blanket** | |
| Model CTB-24 & CTB-28 | 116 |
| **Access Doors** | |
| FRAD-V | 117 |
| Stud Wall Installation Detail | 118 |
| Masonry Installation Detail | 119 |
| 20-HAD & 25-CAD | 120 |
| 60-RHAD & 65-RCAD | 121 |
| 60-HAD & 65-CAD | 122 |
| 60-WHAD & 65-WCAD | 123 |
| 80-HAD & 85-CAD | 124 |
| 90-WI | 125 |


231 Commerce Dr. Montgomeryville, PA 18936
Tel: 215-412-4445 Fax: 215-412-4409
Email: lloydind@firedamper.com

138 Industrial Loop West, Orange Park, FL 32073
Tel: 904-541-1655 Fax: 904-541-1657
Email: lloydind1@firedamper.com

B1, 4/F., Luen Ming Hing Factory Building
36 Mok Cheong St.,
To Kwa Wan, Kowloon, H. K.
Tel: 852-2760-4188 Fax: 852-2760-4177
Email: tatanlexyim@lloydasia.com

Website: www.firedamper.com

*ALL STATED SPECIFICATIONS ARE SUBJECT TO UPDATE WITHOUT NOTICE OR OBLIGATION.



Lloyd Industries Inc. 2017

# Contents


| | Page No. |
|---|---|
| **Extruded Aluminum Louver** | |
| 2-SRF | 126-127 |
| 2-SRCF | 128-129 |
| 4-SRF | 130-131 |
| 4-SRCF | 132-133 |
| 2-SRF COMBO | 134 |
| 2-SRCF COMBO | 135 |
| 4-SRF COMBO | 136 |
| 4-SRCF COMBO | 137 |
| 4-DL | 138 |
| 4-DLF | 139 |
| 4-DL& 4-DLF Performance Data | 140 |
| 4-DL 33º | 141 |
| 4-DLF 33º | 142 |
| 4-DL 33º & 4-DLF 33º Performance Data | 143 |
| 6-DL | 144 |
| 6-DLF | 145 |
| 6-DL & 6-DLF Performance Data | 146 |
| 4-CBL&4-CBLF (Chevron Blade Louver) | 147 |
| **Galvanized, Stainless and copper Louver** | |
| 2-SRF-ML | 148 |
| 4-SRF-ML | 149 |
| **Backdraft Damper** | |
| LBD-1 & LBDF-1 (with Rear Flange) | 150 |
| LBD-1 Assembly | 151 |
| LBDF-2 (with Front Flange) | 152 |
| Optional Blade Counterweights | 153 |
| **Adjustable Backdraft Round Damper** | |
| Model AC 30-BRD (Single Blade) | 154 |
| Model AC 40-BRD (Single Blade) | 155 |


231 Commerce Dr. Montgomeryville, PA 18936
Tel: 215-412-4445 Fax: 215-412-4409
Email: lloydind@firedamper.com

138 Industrial Loop West, Orange Park, FL 32073
Tel: 904-541-1655 Fax: 904-541-1657
Email: lloydind1@firedamper.com

B1, 4/F., Luen Ming Hing Factory Building
36 Mok Cheong St.,
To Kwa Wan, Kowloon, H. K.
Tel: 852-2760-4188 Fax: 852-2760-4177
Email: tatanlexyim@lloydasia.com

Website: www.firedamper.com

*ALL STATED SPECIFICATIONS ARE SUBJECT TO UPDATE WITHOUT NOTICE OR OBLIGATION.



Lloyd Industries Inc. 2017

# Contents


| | Page No. |
|---|---|
| **Extruded Aluminum Brick Vents** | |
| Model 1-BVF Storm resistant (Flanged) | 156 |
| Model 4-BVCF Storm resistant (Channel Frame) | 157 |
| **Stud Protectors** | |
| Stud Protectors | 158-159 |
| **Security Bars** | |
| Model SB-1 &SB-2 | 160 |
| **Curb** | |
| Model LS-CA (Steel) & LA-CA (Aluminum) | 161 |
| Model LS-SF (Steel) & LA-SF (Aluminum) | 162 |
| Model LS-SC (Steel) & LA-SC (Aluminum) | 163 |
| Model LS-SFP (Steel) & LA-SFP (Aluminum) | 164 |
| **Equipment Support Rails** | |
| Model LS-ESF (Steel Self Flashing) & LA-ESF (Aluminum Self Flashing) | 165 |
| Model LS-ESC (Steel) & LA-ESC (Aluminum) | 166 |
| Rail Supports & Roof Curbs Load Test Result | 167 |
| **Fire/Smoke Damper Installation Instructions** | |
| Fire/Smoke Damper | 170-175 |
| Smoke Damper | 176 |
| **Corridor Combination Fire Smoke Damper Installation Instruction** | |
| Corridor Combination Fire Smoke Damper | 177-178 |
| **CRD Installation Instructions** | |
| Boot Clip Installation | 179-182 |
| CRD with Plenum Box/Register Box Assembly Installation Instruction | 183-186 |
| Model 45-LT | 187-189 |
| CRD 45LTD for Flush Mount Grilles | 190-191 |
| CRD 45LTD for Drop Duct | 192 |
| CRD 45LTD for Register & Grille | 193-194 |
| CRD 50-4X & CRD 50-6X (Ducted Supply or Return) | 195-196 |
| CRD 50-4X & CRD 50-6X (Non-Ducted Supply or Return) | 197-198 |


231 Commerce Dr. Montgomeryville, PA 18936
Tel: 215-412-4445 Fax: 215-412-4409
Email: lloydind@firedamper.com

138 Industrial Loop West, Orange Park, FL 32073
Tel: 904-541-1655 Fax: 904-541-1657
Email: lloydind1@firedamper.com

B1, 4/F., Luen Ming Hing Factory Building
36 Mok Cheong St.,
To Kwa Wan, Kowloon, H. K.
Tel: 852-2760-4188 Fax: 852-2760-4177
Email: tatanlexyim@lloydasia.com

Website: www.firedamper.com

*ALL STATED SPECIFICATIONS ARE SUBJECT TO UPDATE WITHOUT NOTICE OR OBLIGATION.



Lloyd Industries Inc. 2017

# Contents


| | Page No. |
|---|---|
| **CRD Installation Instructions** | |
| CRD Assembly with Boot & Collar | 199 |
| CRD55/55EA | 200-201 |
| CRD50/50EA | 202-203 |
| CRD55/55EA (Non Ducted Supply & Return) | 204 |
| CRD55/55EA (Ducted Supply & Return) | 205 |
| CRD50/50EA (Ducted Supply & Return) | 206 |
| General Installation Instruction-CRD-50/CRD-50-EA (Rectangle) | 207 |
| General Installation Instruction-CRD-55/CRD-55-EA (Round) | 208 |
| **Fire Damper Installation Instructions** | |
| Fire Damper Installation Instructions | 209-222 |


231 Commerce Dr. Montgomeryville, PA 18936
Tel: 215-412-4445 Fax: 215-412-4409
Email: lloydind@firedamper.com

138 Industrial Loop West, Orange Park, FL 32073
Tel: 904-541-1655 Fax: 904-541-1657
Email: lloydind1@firedamper.com

B1, 4/F., Luen Ming Hing Factory Building
36 Mok Cheong St.,
To Kwa Wan, Kowloon, H. K.
Tel: 852-2760-4188 Fax: 852-2760-4177
Email: tatanlexyim@lloydasia.com

Website: www.firedamper.com

*ALL STATED SPECIFICATIONS ARE SUBJECT TO UPDATE WITHOUT NOTICE OR OBLIGATION.



Lloyd Industries Inc. 2017

# FIRE DAMPER

**MODEL:**
**75AH & 75AV (1-1/2 HR rating)**



Model 75AV

## APPLICATION

The model 75AH and 75AV fire damper. It is approved for use in walls, floors, and partitions with fire resistance ratings less than 2 hours. This model carries a 1-1/2 hour UL fire damper label.

## RATING:

**UL CLASSIFIED**: UL 555 Fire Resistance Rating
Fire resistance rated 1-1/2 Hours
Partitions materials rated 2 Hours or less

Model 75A meets the requirements for fire dampers established by:
**CSFM California State Fire Marshal Fire Damper Listing (#3225-1417:102)**
**British Standard (BS – 476 Part 20)**

## Standard Construction

Frame: 22 Ga. galvanized steel
Blade: 22 Ga. galvanized steel
Closure Spring: Negator stainless steel
Fusible Link: 165°F
Mounting: Horizontal or vertical

**Optional Material:**
Type 316 stainless steal

| | Single Section | | Multiple Section |
|---|---|---|---|
| | Minimum Size (WxH) | Maximum Size (WxH) | Maximum Size (WxH) |
| Vertical | 4"x4" | 60"x60" | 120"x120" |
| Horizontal | 4"x4" | 60"x60" | N/A |
| Horizontal | 4"x4" | 34"x48" | 68"x96" |

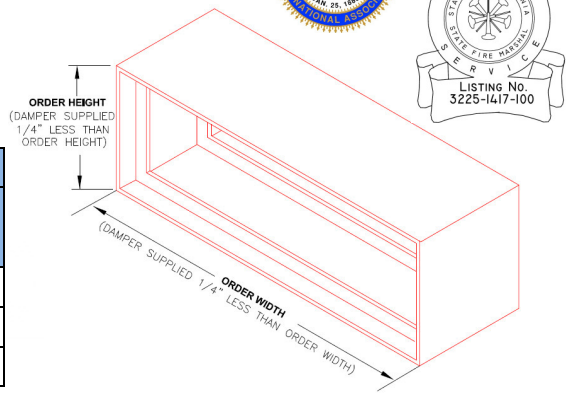


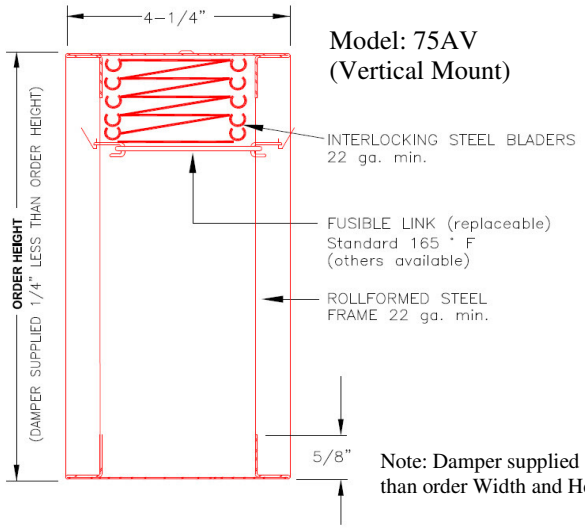


Model: 75AV
(Vertical Mount)

Note: Damper supplied 1/4"less than order Width and Height

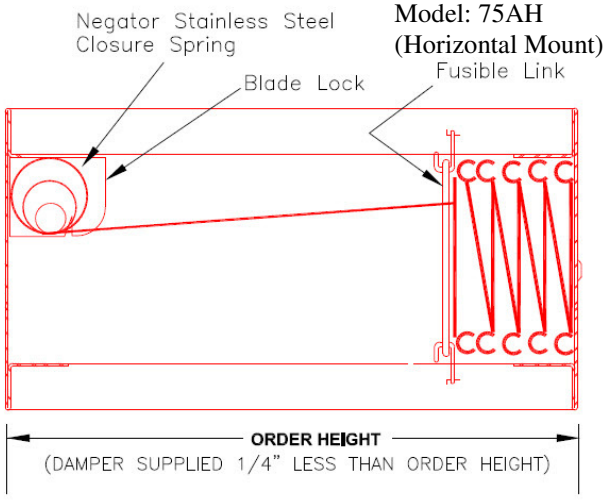


Model: 75AH
(Horizontal Mount)

231 Commerce Dr. Montgomeryville, PA 18936
Tel: 215-412-4445 Fax: 215-412-4409
Email: lloydind@firedamper.com

138 Industrial Loop West, Orange Park, FL 32073
Tel: 904-541-1655 Fax: 904-541-1657
Email: lloydind1@firedamper.com

B1, 4/F., Luen Ming Hing Factory Building
36 Mok Cheong St.,
To Kwa Wan, Kowloon, H. K.
Tel: 852-2760-4188 Fax: 852-2760-4177
Email: tatanlexyim@lloydasia.com

Website: www.firedamper.com

*ALL STATED SPECIFICATIONS ARE SUBJECT TO UPDATE WITHOUT NOTICE OR OBLIGATION.



Lloyd Industries Inc. 2017

# FIRE DAMPER

**MODEL:**
**75BH& 75BV (1-1/2 HR rating)**



## APPLICATION

The model 75B is an out of stream fire damper. It is approved for use in walls, floors, and partitions with fire resistance ratings less than 2 hours. This model carries a 1-1/2 hour UL fire damper label.

## RATING:

**UL CLASSIFIED**: UL 555 Fire Resistance Rating
Fire resistance rated 1-1/2 Hours
Partitions materials rated 2 Hours or less

Model 75B meets the requirements for fire dampers established by:
**CSFM California State Fire Marshal**
**Fire Damper Listing (#3225-1417:102)**

## Standard Construction

Frame: 22 Ga. galvanized steel
Blade: 22 Ga. galvanized steel
Closure Spring: Negator stainless steel
Fusible Link: 165°F
Mounting: Horizontal or vertical

**Optional Material:**
Type 316 stainless steal

| | Single Section | | Multiple Section |
|---|---|---|---|
| | Minimum Size (WxH) | Maximum Size (WxH) | Maximum Size (WxH) |
| Vertical | 4"x3" | 60"x53" | 120"x53" |
| Horizontal | 4"x5" | 60"x53" | NA |

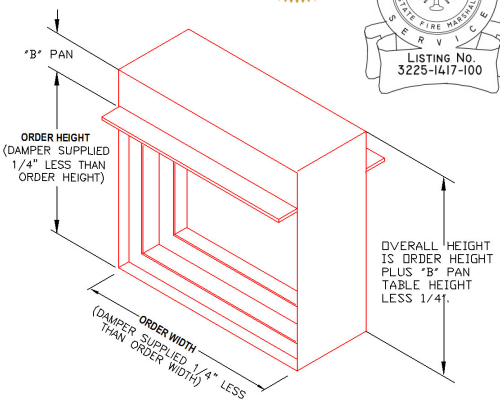


Model: 75BH
(Horizontal Mount)

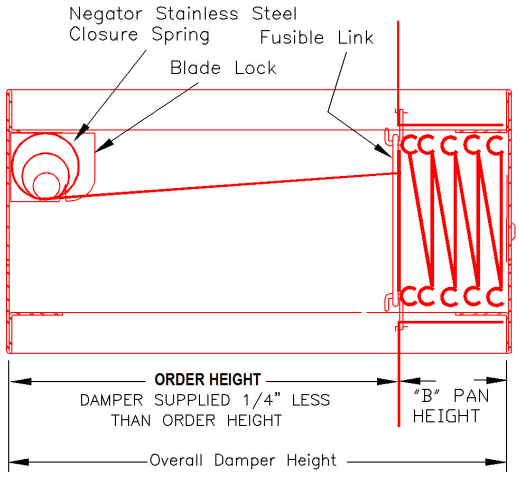


Model: 75BV
(Vertical Mount)

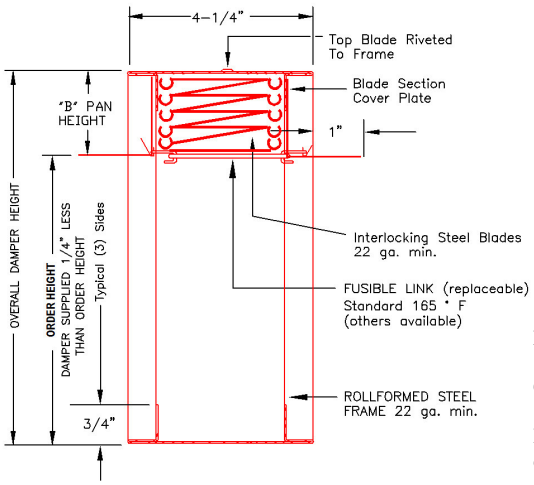


Note:
*Please see "B" PAN Sizing Chart for the "B" PAN Height.

Damper supplied 1/4"less than order Width and Height.

231 Commerce Dr. Montgomeryville, PA 18936
Tel: 215-412-4445 Fax: 215-412-4409
Email: lloydind@firedamper.com

138 Industrial Loop West, Orange Park, FL 32073
Tel: 904-541-1655 Fax: 904-541-1657
Email: lloydind1@firedamper.com

B1, 4/F., Luen Ming Hing Factory Building
36 Mok Cheong St.,
To Kwa Wan, Kowloon, H. K.
Tel: 852-2760-4188 Fax: 852-2760-4177
Email: tatanlexyim@lloydasia.com

Website: www.firedamper.com

*ALL STATED SPECIFICATIONS ARE SUBJECT TO UPDATE WITHOUT NOTICE OR OBLIGATION.



Lloyd Industries Inc. 2017

# LLOYD INDUSTRIES INC.

WWW.FIREDAMPER.COM

# FIRE DAMPER

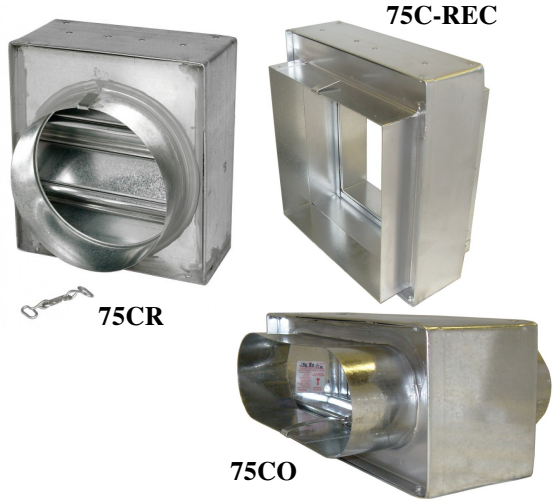
75C-REC
75CR
75CO

**MODEL:**
**75C (1-1/2 HR rating)**
**75CR (1-1/2 HR rating)**
**75CO (1-1/2 HR rating)**

## APPLICATION

The model 75C is a fire damper with blades and frames "Out of Air Stream". It is approved for use in walls, floors, and partitions with fire resistance ratings less than 2 hours. This model carries a 1-1/2 hour UL fire damper label.

## RATING:

**UL CLASSIFIED**: UL 555 Fire Resistance Rating
Fire resistance rated 1-1/2 Hours
Partitions rated 2 Hours or less

Model 75C meets the requirements for fire dampers established by:
**CSFM California State Fire Marshal Fire Damper Listing (#3225-1417:102)**

## Standard Construction

Frame: 22 Ga. galvanized steel
Blade: 22 Ga. galvanized steel
Closure Spring: Stainless steel
Fusible Link: 165°F
Mounting: Horizontal or vertical

**Optional Material:**
Type 316 stainless steal

| | Single Section | | | |
|---|---|---|---|---|
| | Maximum Section (WxH) | Maximum Duct Size (WxH) | Minimum Diameter | Maximum Diameter |
| Vertical | 60"x60" | 120"x120" | 3" | 52" |
| Horizontal | 60"x60" | 60"x60" | 3" | 52" |

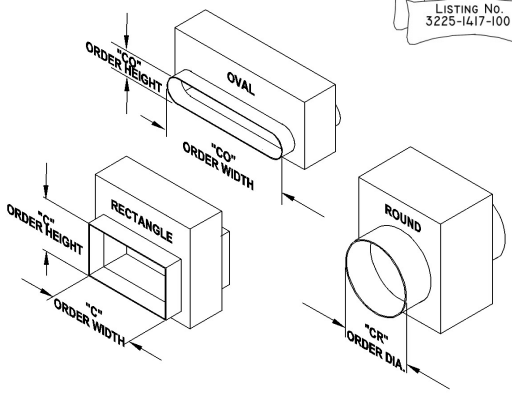


Model: 75CV
75CRV
75COV
(Vertical Mount)

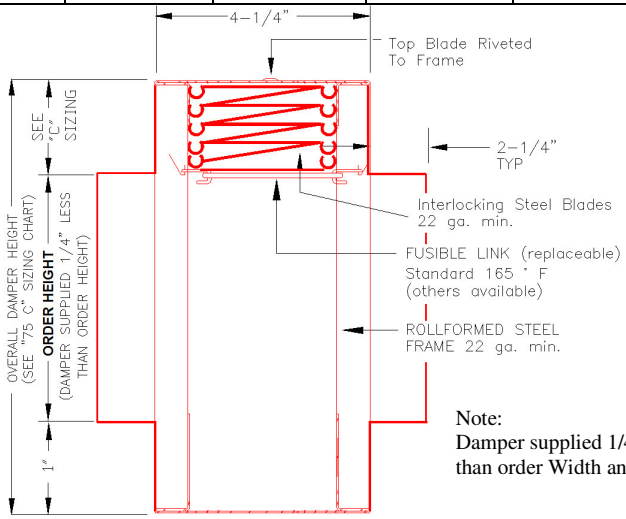


Note:
Damper supplied 1/4"less than order Width and Height.

Model: 75CH
75CRH
75COH
(Horizontal Mount)

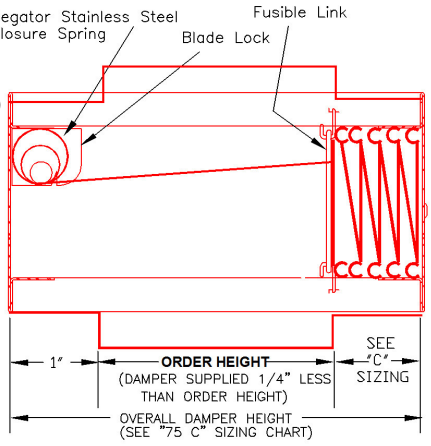



231 Commerce Dr. Montgomeryville, PA 18936
Tel: 215-412-4445 Fax: 215-412-4409
Email: lloydind@firedamper.com

138 Industrial Loop West, Orange Park, FL 32073
Tel: 904-541-1655 Fax: 904-541-1657
Email: lloydind1@firedamper.com

B1, 4/F., Luen Ming Hing Factory Building
36 Mok Cheong St.,
To Kwa Wan, Kowloon, H. K.
Tel: 852-2760-4188 Fax: 852-2760-4177
Email: tatanlexyim@lloydasia.com

Website: www.firedamper.com



*ALL STATED SPECIFICATIONS ARE SUBJECT TO UPDATE WITHOUT NOTICE OR OBLIGATION.





Lloyd Industries Inc. 2017

# FIRE DAMPER

**MODEL:**
**75DV/DH (1-1/2 HR rating)**



## APPLICATION

The model 75D is Lloyd Industries' thin line fire damper with blades in the airstream. It is approved for use in walls, floors, and partitions with fire resistance ratings less than 1-1/2 hours. This model carries a 1-1/2 hour UL fire damper label.

## RATING:

**UL CLASSIFIED**: UL 555 Fire Resistance Rating
Fire resistance rated 1-1/2 Hours
Partitions materials rated 2 Hours or less

## Standard Construction

| | |
|---|---|
| Frame: | 22 Ga. galvanized steel |
| Blade: | 22 Ga. galvanized steel |
| Closure Spring: | Stainless steel |
| Fusible Link: | 165°F |
| Mounting: | Horizontal or vertical |

**Optional Material:**
Type 316 stainless steal

Model 75D meets the requirements for fire dampers established by:
**CSFM California State Fire Marshal**
**Fire Damper Listing (#3225-1417:102)**

| | Single Section | |
|---|---|---|
| | Minimum Size (WxH) | Maximum Size (WxH) |
| Vertical | 4"x4" | 48"x49" |
| Horizontal | 4"x4" | 41"x36" |

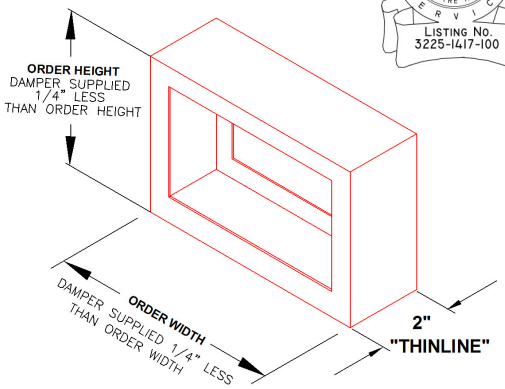


Model: 75DV
(Vertical Mount)

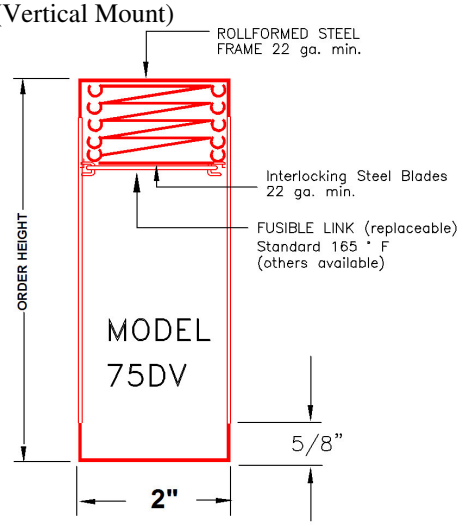


Model: 75DH
(Horizontal Mount)

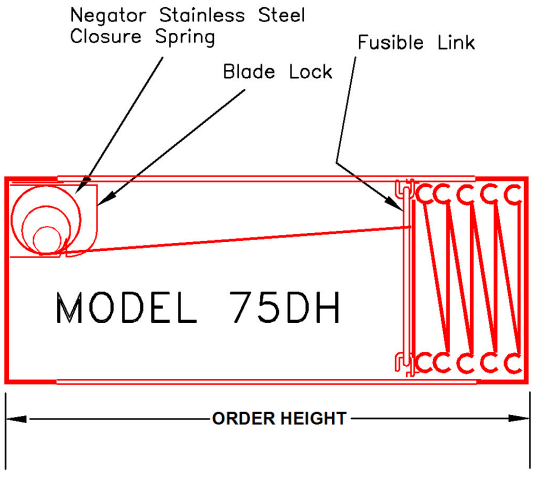


Note:
*Please see "B" PAN Sizing Chart for the "B" PAN Height.

Damper supplied 1/4"less than order Width and Height.

231 Commerce Dr. Montgomeryville, PA 18936
Tel: 215-412-4445 Fax: 215-412-4409
Email: lloydind@firedamper.com

138 Industrial Loop West, Orange Park, FL 32073
Tel: 904-541-1655 Fax: 904-541-1657
Email: lloydind1@firedamper.com

B1, 4/F., Luen Ming Hing Factory Building
36 Mok Cheong St.,
To Kwa Wan, Kowloon, H. K.
Tel: 852-2760-4188 Fax: 852-2760-4177
Email: tatanlexyim@lloydasia.com

Website: www.firedamper.com

*ALL STATED SPECIFICATIONS ARE SUBJECT TO UPDATE WITHOUT NOTICE OR OBLIGATION.



Lloyd Industries Inc. 2017

# FIRE DAMPER

**MODEL:**
**75DB (1-1/2 HR rating)**



## APPLICATION

The model 75DB is Lloyd Industries' thin line fire damper with blades out of the airstream. It is approved for use in walls, floors, and partitions with fire resistance ratings less than 2 hours. This model carries a 1-1/2 hour UL fire damper label.

## RATING:

**UL CLASSIFIED**: UL 555 Fire Resistance Rating
Fire resistance rated 1-1/2 Hours
Partitions materials rated 2 Hours or less

Model 75DB meets the requirements for fire dampers established by:
**CSFM California State Fire Marshal Fire Damper Listing (#3225-1417:102)**

## Standard Construction

Frame: 22 Ga. galvanized steel
Blade: 22 Ga. galvanized steel
Closure Spring: Stainless steel
Fusible Link: 165°F
Mounting: Horizontal or vertical

**Optional Material:**
Type 316 stainless steal

| | Single Section | | |
|---|---|---|---|
| | Minimum (WxH) | Maximum Section (WxH) | Maximum Duct Size (WxH) |
| Vertical | 4" x 3" | 48" x 49" | 41" x 36" |
| Horizontal | 4" x 3" | 48" x 49" | 41" x 36" |

Model: 75DBV
(Vertical Mount)

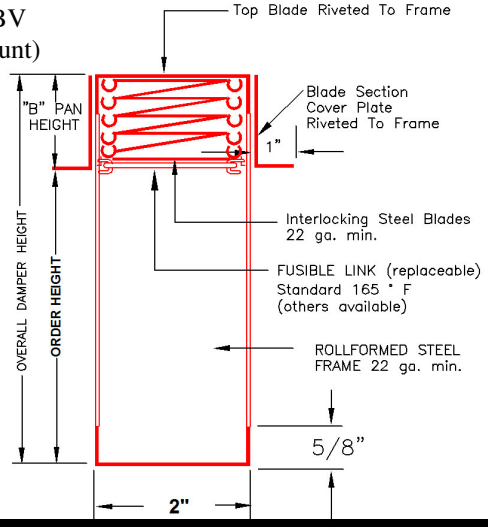


Model: 75DBH
(Horizontal Mount)

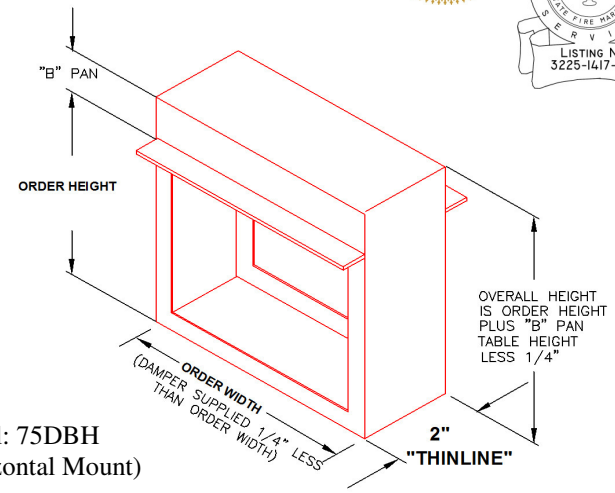


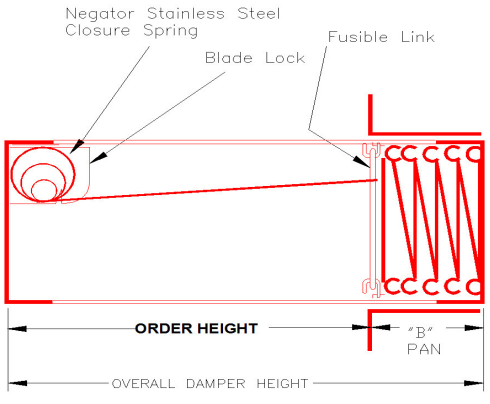


Note:
*Please see "B" PAN Sizing Chart for the "B" PAN Height.

Damper supplied 1/4"less than order Width and Height.

231 Commerce Dr. Montgomeryville, PA 18936
Tel: 215-412-4445 Fax: 215-412-4409
Email: lloydind@firedamper.com

138 Industrial Loop West, Orange Park, FL 32073
Tel: 904-541-1655 Fax: 904-541-1657
Email: lloydind1@firedamper.com

B1, 4/F., Luen Ming Hing Factory Building
36 Mok Cheong St.,
To Kwa Wan, Kowloon, H. K.
Tel: 852-2760-4188 Fax: 852-2760-4177
Email: tatanlexyim@lloydasia.com

Website: www.firedamper.com

*ALL STATED SPECIFICATIONS ARE SUBJECT TO UPDATE WITHOUT NOTICE OR OBLIGATION.



Lloyd Industries Inc. 2017

# FIRE DAMPER



**MODEL:**
**75L (3 HR rating)**

## APPLICATION

The model 75L is a fire damper with blades in the airstream. It is approved for use in walls, floors, and partitions with fire resistance ratings less than 3 hours. This model carries a 3 hour UL fire damper label.

## RATING:

**UL CLASSIFIED**: UL 555 Fire Resistance Rating
Fire resistance rated 3 Hours
Partitions materials rated 4 Hours or less

Model 75L meets the requirements for fire dampers established by:
**CSFM California State Fire Marshal**
**Fire Damper Listing (#3225-1417:102)**
**New York City (MEA listing #215-99-E)**

## Standard Construction

Frame: 22 Ga. galvanized steel
Blade: 22 Ga. galvanized steel
Closure Spring: Stainless steel
Fusible Link: 165°F

**Optional Material:**
Type 316 stainless steal

| | Single Section | | Multiple Section |
|---|---|---|---|
| | Minimum Size (WxH) | Maximum Size (WxH) | Maximum Size (WxH) |
| Vertical | 4"x4" | 60"x60" | 120"x120" |
| Horizontal | NA | NA | NA |

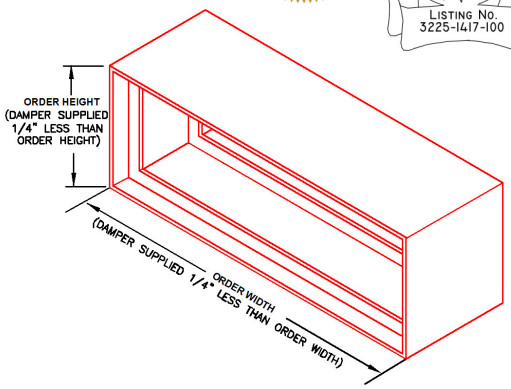


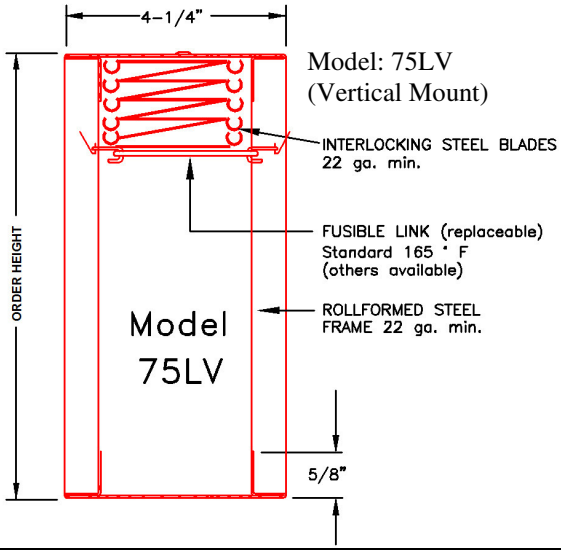


Model: 75LV
(Vertical Mount)

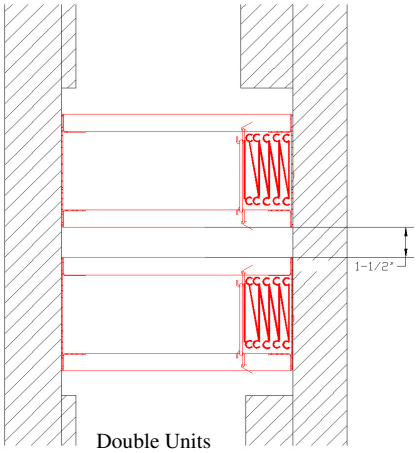


Double Units

Note:
*Please see "B" PAN Sizing Chart for the "B" PAN Height.

Damper supplied 1/4"less than order Width and Height.

231 Commerce Dr. Montgomeryville, PA 18936
Tel: 215-412-4445 Fax: 215-412-4409
Email: lloydind@firedamper.com

138 Industrial Loop West, Orange Park, FL 32073
Tel: 904-541-1655 Fax: 904-541-1657
Email: lloydind1@firedamper.com

B1, 4/F., Luen Ming Hing Factory Building
36 Mok Cheong St.,
To Kwa Wan, Kowloon, H. K.
Tel: 852-2760-4188 Fax: 852-2760-4177
Email: tatanlexyim@lloydasia.com

Website: www.firedamper.com

*ALL STATED SPECIFICATIONS ARE SUBJECT TO UPDATE WITHOUT NOTICE OR OBLIGATION.



Lloyd Industries Inc. 2017

# FIRE DAMPER

**MODEL:**
**75LB (3 HR rating)**



## APPLICATION

The model 75LB is a fire damper with blades out of the airstream. It is approved for use in walls and partitions with fire resistance ratings less than 3 hours. This model carries a 3 hour UL fire damper label.

## RATING:

**UL CLASSIFIED**: UL 555 Fire Resistance Rating
Fire resistance rated 3 Hours
Partitions materials rated 4 Hours or less

Model 75LB meets the requirements for fire dampers established by:
**CSFM California State Fire Marshal**
**Fire Damper Listing (#3225-1417:102)**

## Standard Construction

Frame: 22 Ga. galvanized steel
Blade: 22 Ga. galvanized steel
Closure Spring: Stainless steel
Fusible Link: 165°F
Mounting: Vertical

**Optional Material:**
Type 316 stainless steal

| | Single Section | | Multiple Section |
|---|---|---|---|
| | Minimum Size (WxH) | Maximum Size (WxH) | Maximum Size (WxH) |
| Vertical | 4"x3" | 60"x53" | 120"x53" |
| Horizontal | NA | NA | NA |

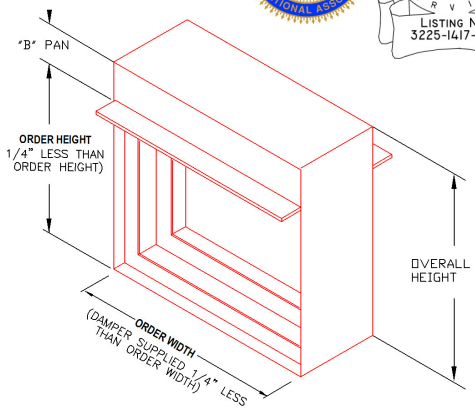


Model: 75LV
(Vertical Mount)

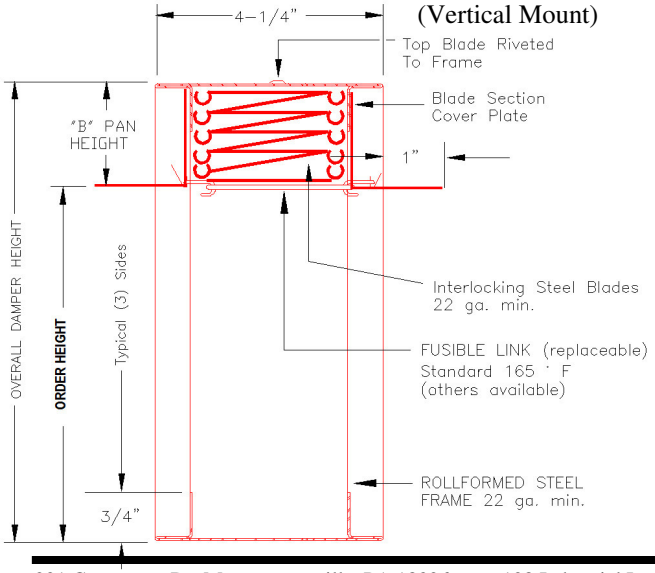


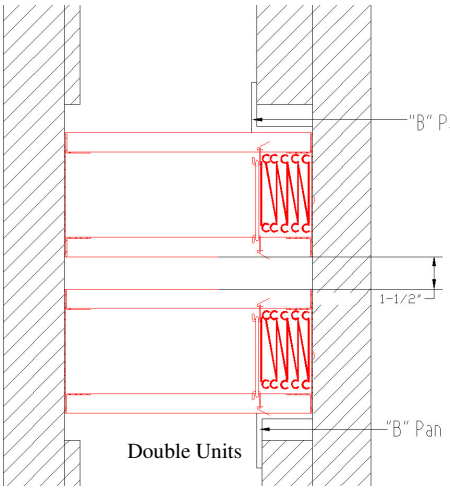


Double Units

Note:
*Please see "B" PAN Sizing Chart for the "B" PAN Height.

Damper supplied 1/4"less than order Width and Height.

231 Commerce Dr. Montgomeryville, PA 18936
Tel: 215-412-4445 Fax: 215-412-4409
Email: lloydind@firedamper.com

138 Industrial Loop West, Orange Park, FL 32073
Tel: 904-541-1655 Fax: 904-541-1657
Email: lloydind1@firedamper.com

B1, 4/F., Luen Ming Hing Factory Building
36 Mok Cheong St.,
To Kwa Wan, Kowloon, H. K.
Tel: 852-2760-4188 Fax: 852-2760-4177
Email: tatanlexyim@lloydasia.com

Website: www.firedamper.com

*ALL STATED SPECIFICATIONS ARE SUBJECT TO UPDATE WITHOUT NOTICE OR OBLIGATION.



Lloyd Industries Inc. 2017

# FIRE DAMPER



75LC



75LCR



75LCO

**MODEL:**
**75LC (3 HR rating)**
**75LCR (3 HR rating)**
**75LCO (3 HR rating)**

## APPLICATION

The model 75LC/75LCR/75LCO are fire damper with blades and frames "Out of Air Stream". It is approved for use in walls and partitions with fire resistance ratings less than 3 hours. This model carries a 3 hour UL fire damper label.

## RATING:

**UL CLASSIFIED**: UL 555 Fire Resistance Rating
Fire resistance rated 3 Hours
Partitions materials rated 4 Hours or less

## Standard Construction

Frame: 22 Ga. galvanized steel
Blade: 22 Ga. galvanized steel
Closure Spring: Stainless steel
Fusible Link: 165°F
Mounting: Vertical

**Optional Material:**
Type 316 stainless steal

Model 75LC/75LCR/75LCO meets the requirements for fire dampers established by:
**CSFM California State Fire Marshal**
**Fire Damper Listing (#3225-1417:102)**

| | Single Section | | | |
|---|---|---|---|---|
| | Maximum Section | Maximum Duct Size | Minimum Diameter | Maximum Diameter |
| Vertical | 60"x60" | 120"x120" | 3" | 20" |
| Horizontal | NA | NA | NA | NA |

Model: 75LC
75LCR
75LCO
(Vertical Mount)

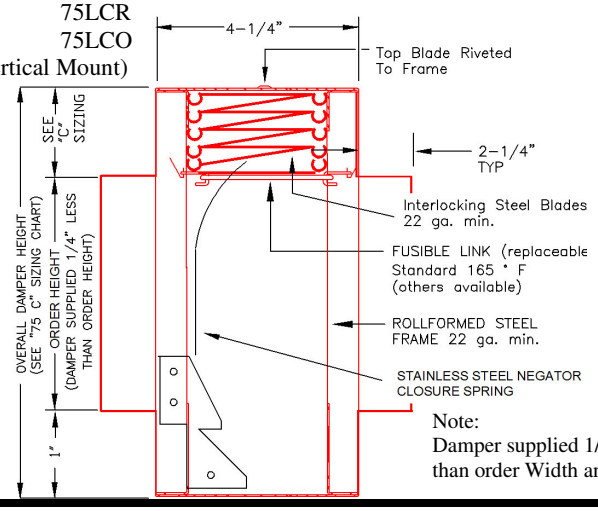


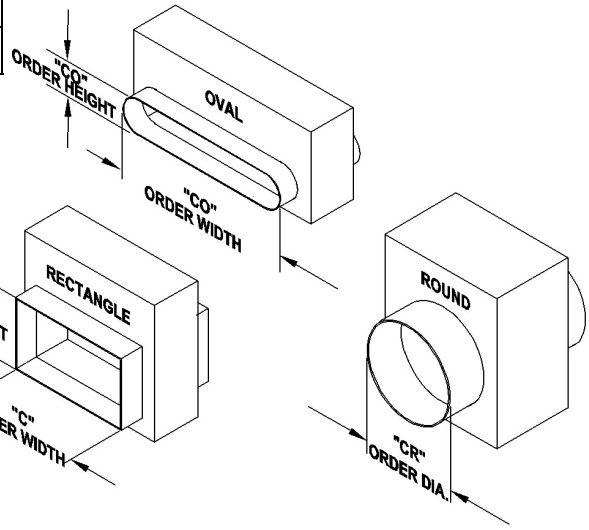


Note:
Damper supplied 1/4"less
than order Width and Height.

231 Commerce Dr. Montgomeryville, PA 18936
Tel: 215-412-4445 Fax: 215-412-4409
Email: lloydind@firedamper.com

138 Industrial Loop West, Orange Park, FL 32073
Tel: 904-541-1655 Fax: 904-541-1657
Email: lloydind1@firedamper.com

B1, 4/F., Luen Ming Hing Factory Building
36 Mok Cheong St.,
To Kwa Wan, Kowloon, H. K.
Tel: 852-2760-4188 Fax: 852-2760-4177
Email: tatanlexyim@lloydasia.com

Website: www.firedamper.com

*ALL STATED SPECIFICATIONS ARE SUBJECT TO UPDATE WITHOUT NOTICE OR OBLIGATION.



Lloyd Industries Inc. 2017

# FIRE DAMPER

**MODEL:**
**75N (3 HR rating)**



## APPLICATION

The model 75N is a thin line fire damper. It is approved for use in walls and partitions with fire resistance ratings less than 3 hours. This model carries a 3 hour UL fire damper label.

## RATING:

**UL CLASSIFIED**: UL 555 Fire Resistance Rating
Fire resistance rated 3 Hours
Partitions materials rated 4 Hours or less

Model 75N meets the requirements for fire dampers established by:
**CSFM California State Fire Marshal**
**Fire Damper Listing (#3225-1417:102)**

## Standard Construction

Frame: 22 Ga. galvanized steel
Blade: 22 Ga. galvanized steel
Closure Spring: Stainless steel
Fusible Link: 165°F
Mounting: Vertical

**Optional Material:**
Type 316 stainless steal

| | Single Section | | Multiple Section |
|---|---|---|---|
| | Minimum Size (WxH) | Maximum Size (WxH) | Maximum Size (WxH) |
| Vertical | 4"x4" | 48"x49" | 96"x98" |
| Horizontal | NA | NA | NA |

Model: 75N
(Vertical Mount)

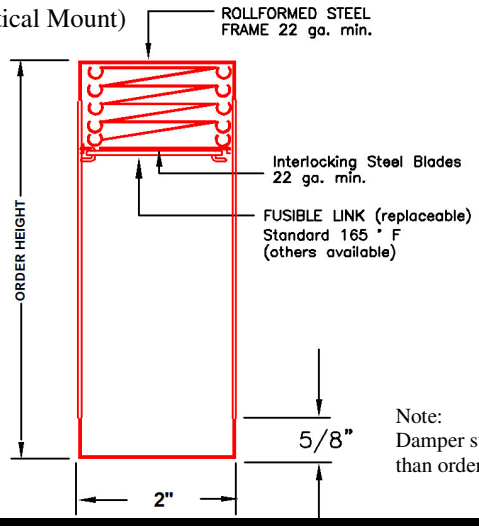


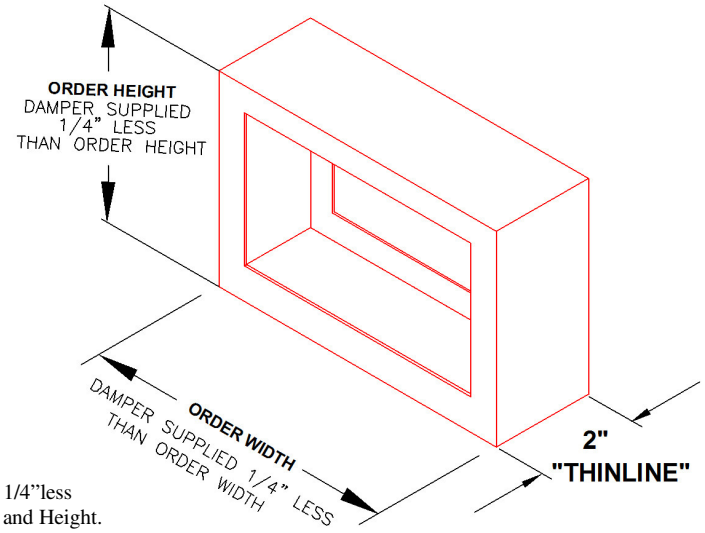


Note:
Damper supplied 1/4"less than order Width and Height.

231 Commerce Dr. Montgomeryville, PA 18936
Tel: 215-412-4445 Fax: 215-412-4409
Email: lloydind@firedamper.com

138 Industrial Loop West, Orange Park, FL 32073
Tel: 904-541-1655 Fax: 904-541-1657
Email: lloydind1@firedamper.com

B1, 4/F., Luen Ming Hing Factory Building
36 Mok Cheong St.,
To Kwa Wan, Kowloon, H. K.
Tel: 852-2760-4188 Fax: 852-2760-4177
Email: tatanlexyim@lloydasia.com

Website: www.firedamper.com

*ALL STATED SPECIFICATIONS ARE SUBJECT TO UPDATE WITHOUT NOTICE OR OBLIGATION.



Lloyd Industries Inc. 2017

# FIRE DAMPER



**MODEL:**
**75NB (3 HR rating)**

## APPLICATION

The model 75NB is a thin line fire damper with blades out of the airstream. It is approved for use in walls, floors, and partitions with fire resistance ratings less than 3 hours. This model carries a 3 hour UL fire damper label.

## RATING:

**UL CLASSIFIED**: UL 555 Fire Resistance Rating
Fire resistance rated 3 Hours
Partitions materials rated 4 Hours or less

Model 75NB meets the requirements for fire dampers established by:
**CSFM California State Fire Marshal**
**Fire Damper Listing (#3225-1417:102)**

## Standard Construction

Frame: 22 Ga. galvanized steel
Blade: 22 Ga. galvanized steel
Closure Spring: Stainless steel
Fusible Link: 165°F
Mounting: Vertical

**Optional Material:**
Type 316 stainless steal

| | Single Section | | |
|---|---|---|---|
| | Minimum (WxH) | Maximum Section (WxH) | Maximum Duct Size (WxH) |
| Vertical | 4" x 3" | 48" x 41" | 96" x 98" |
| Horizontal | NA | NA | NA |

Model: 75NB
(Vertical Mount)

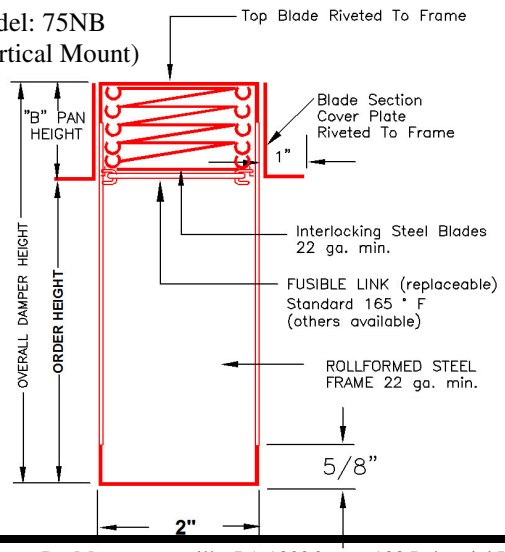


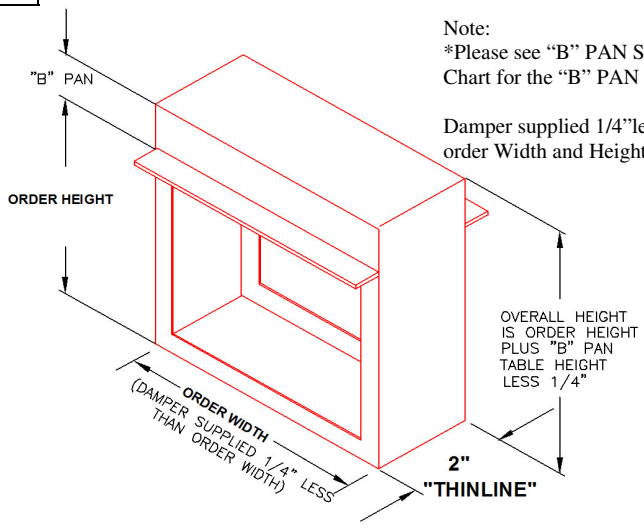


Note:
*Please see "B" PAN Sizing Chart for the "B" PAN Height.

Damper supplied 1/4"less than order Width and Height.

231 Commerce Dr. Montgomeryville, PA 18936
Tel: 215-412-4445 Fax: 215-412-4409
Email: lloydind@firedamper.com

138 Industrial Loop West, Orange Park, FL 32073
Tel: 904-541-1655 Fax: 904-541-1657
Email: lloydind1@firedamper.com

B1, 4/F., Luen Ming Hing Factory Building
36 Mok Cheong St.,
To Kwa Wan, Kowloon, H. K.
Tel: 852-2760-4188 Fax: 852-2760-4177
Email: tatanlexyim@lloydasia.com

Website: www.firedamper.com

*ALL STATED SPECIFICATIONS ARE SUBJECT TO UPDATE WITHOUT NOTICE OR OBLIGATION.



Lloyd Industries Inc. 2017

## "B" Pan Sizing Chart for Model 75B and model 75LB

| Duct Opening Order Height (Inches) | Overall Height (Inches) | Duct Opening Order Height (Inches) | Overall Height (Inches) |
|---|---|---|---|
| 4 | 5 | 29 | 33 |
| 5 | 6 | 30 | 34 |
| 6 | 7 | 31 | 35 |
| 7 | 8 | 32 | 36 |
| 8 | 10 | 33 | 37 |
| 9 | 11 | 34 | 38 |
| 10 | 12 | 35 | 39 |
| 11 | 13 | 36 | 41 |
| 12 | 14 | 37 | 42 |
| 13 | 15 | 38 | 43 |
| 14 | 16 | 39 | 44 |
| 15 | 17 | 40 | 45 |
| 16 | 18 | 41 | 46 |
| 17 | 20 | 42 | 47 |
| 18 | 21 | 43 | 48 |
| 19 | 22 | 44 | 49 |
| 20 | 23 | 45 | 51 |
| 21 | 24 | 46 | 52 |
| 22 | 25 | 47 | 53 |
| 23 | 26 | 48 | 54 |
| 24 | 27 | 49 | 55 |
| 25 | 28 | 50 | 56 |
| 26 | 29 | 51 | 57 |
| 27 | 31 | 52 | 58 |
| 28 | 32 | 53 | 59 |

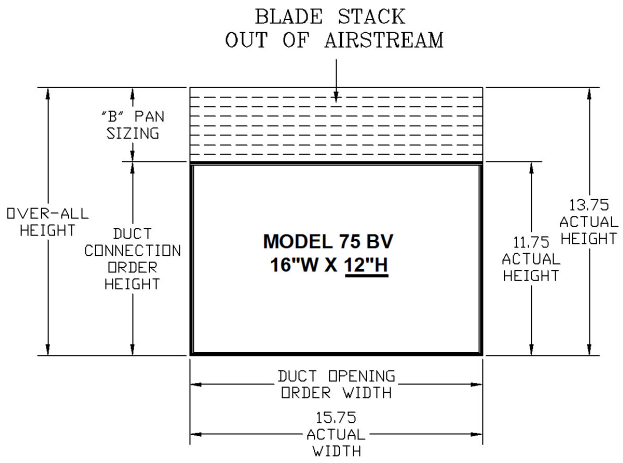


231 Commerce Dr. Montgomeryville, PA 18936
Tel: 215-412-4445 Fax: 215-412-4409
Email: lloydind@firedamper.com

138 Industrial Loop West, Orange Park, FL 32073
Tel: 904-541-1655 Fax: 904-541-1657
Email: lloydind1@firedamper.com

B1, 4/F., Luen Ming Hing Factory Building
36 Mok Cheong St.,
To Kwa Wan, Kowloon, H. K.
Tel: 852-2760-4188 Fax: 852-2760-4177
Email: tatanlexyim@lloydasia.com

Website: www.firedamper.com

*ALL STATED SPECIFICATIONS ARE SUBJECT TO UPDATE WITHOUT NOTICE OR OBLIGATION.



Lloyd Industries Inc. 2017

## "B" Pan Sizing Chart for Model 75DB and model 75NB

| Duct Opening Order Height (Inches) | Overall Height (Inches) | Duct Opening Order Height (Inches) | Overall Height (Inches) |
|---|---|---|---|
| 4 | 6 | 23 | 28 |
| 5 | 7 | 24 | 29 |
| 6 | 8 | 25 | 31 |
| 7 | 9 | 26 | 32 |
| 8 | 11 | 27 | 33 |
| 9 | 12 | 28 | 34 |
| 10 | 13 | 29 | 36 |
| 11 | 14 | 30 | 37 |
| 12 | 15 | 31 | 38 |
| 13 | 17 | 32 | 39 |
| 14 | 18 | 33 | 40 |
| 15 | 19 | 34 | 41 |
| 16 | 20 | 35 | 43 |
| 17 | 21 | 36 | 44 |
| 18 | 23 | 37 | 45 |
| 19 | 24 | 38 | 46 |
| 20 | 25 | 39 | 47 |
| 21 | 26 | 40 | 48 |
| 22 | 27 | 41 | 49 |

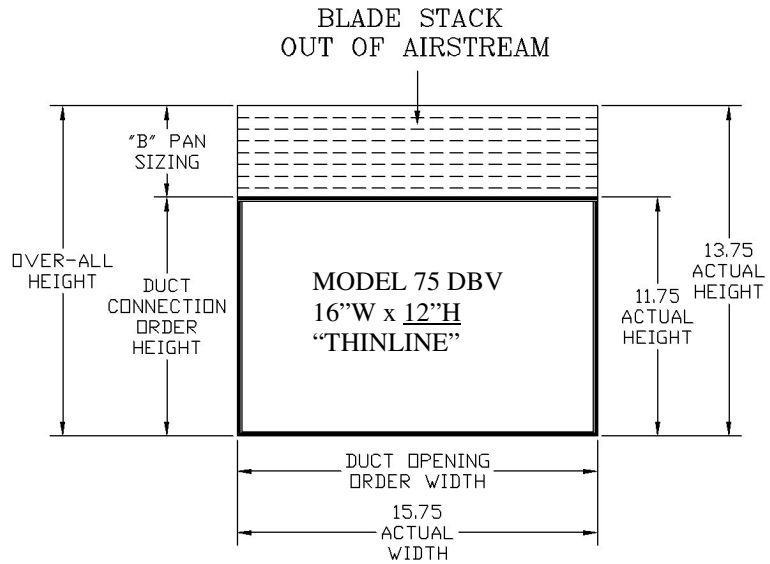




*ALL STATED SPECIFICATIONS ARE SUBJECT TO UPDATE WITHOUT NOTICE OR OBLIGATION.



Lloyd Industries Inc. 2017

## Standard Rectangular Sizing Chart (Model 75-C and 75-LC)

| Order Size Rectangular Collar "W" X "H" | Nominal Damper Width "W" | Nominal Damper Height "H" | Damper Installation Rough Opening "W" x "H" |
|---|---|---|---|
| 4 x 4 | 4 | 4 | 6 x 6 |
| 6 x 4 | 6 | 4 | 8 x 6 |
| 8 x 4 | 8 | 4 | 10 x 6 |
| 10 x 4 | 10 | 4 | 12 x 6 |
| 12 x 4 | 12 | 4 | 14 x 6 |
| 14 x 4 | 14 | 4 | 16 x 6 |
| 16 x 4 | 16 | 4 | 18 x 6 |
| 18 x 4 | 18 | 4 | 20 x 6 |
| 20 x 4 | 20 | 4 | 22 x 6 |
| 24 x 4 | 24 | 4 | 26 x 6 |
| 6 x 6 | 6 | 6 | 8 x 8 |
| 8 x 6 | 8 | 6 | 10 x 8 |
| 10 x 6 | 10 | 6 | 12 x 8 |
| 12 x 6 | 12 | 6 | 14 x 8 |
| 14 x 6 | 14 | 6 | 16 x 8 |
| 16 x 6 | 16 | 6 | 18 x 8 |
| 18 x 6 | 18 | 6 | 20 x 8 |
| 20 x 6 | 20 | 6 | 22 x 8 |
| 24 x 6 | 24 | 6 | 26 x 8 |
| 8 x 8 | 8 | 8 | 10 x 11 |
| 10 x 8 | 10 | 8 | 12 x 11 |
| 12 x 8 | 12 | 8 | 14 x 11 |
| 14 x 8 | 14 | 8 | 16 x 11 |
| 16 x 8 | 16 | 8 | 18 x 11 |
| 18 x 8 | 18 | 8 | 20 x 11 |
| 20 x 8 | 20 | 8 | 22 x 11 |
| 24 x 8 | 24 | 8 | 26 x 11 |
| 10 x 10 | 10 | 10 | 12 x 13 |
| 12 x 10 | 12 | 10 | 14 x 13 |
| 14 x 10 | 14 | 10 | 16 x 13 |
| 16 x 10 | 16 | 10 | 18 x 13 |
| 18 x 10 | 18 | 10 | 20 x 13 |
| 20 x 10 | 20 | 10 | 22 x 13 |
| 24 x 10 | 24 | 10 | 26 x 13 |
| 12 x 12 | 12 | 12 | 14 x 15 |
| 14 x 12 | 14 | 12 | 16 x 15 |
| 16 x 12 | 16 | 12 | 18 x 15 |
| 18 x 12 | 18 | 12 | 20 x 15 |
| 20 x 12 | 20 | 12 | 22 x 15 |
| 24 x 12 | 24 | 12 | 26 x 15 |
| 14 x 14 | 14 | 14 | 18 x 17 |
| 16 x 14 | 16 | 14 | 18 x 17 |
| 18 x 14 | 18 | 14 | 20 x 17 |
| 20 x 14 | 20 | 14 | 22 x 17 |
| 24 x 14 | 24 | 14 | 26 x 17 |
| 16 x 16 | 16 | 16 | 18 x 19 |
| 18 x 16 | 18 | 16 | 20 x 19 |
| 20 x 16 | 20 | 16 | 22 x 19 |
| 24 x 16 | 24 | 16 | 26 x 19 |

1. ROUND COLLAR DIAMETERS ARE PROVIDED NOMINAL SIZE LESS 1/4"
2. DAMPER W X H DIMENSIONS ARE PROVIDED NOMINAL SIZE LESS 1/4"
3. FOR NON-STANDARD DIAMETERS CONSULT THE FACTORY FOR PRICE, AVAILABILITY, AND DELIVERY. (58" W X 52" H MAX. COLLAR)
4. ALL ROUND COLLAR DAMPERS ARE PROVIDED WITH BLADES OUT OF AIR STREAM TO MAXIMIZE FREE AREA & AIR FLOW.
5. TYPE "C" SLEEVES AVAILABLE FOR PICTURE FRAME MOUNTING ANGLE INSTALLATIONS. SPECIFY SLEEVE LENGTH BASED ON WALL/FLOOR THICKNESS PLUS 3" MINIMUM).

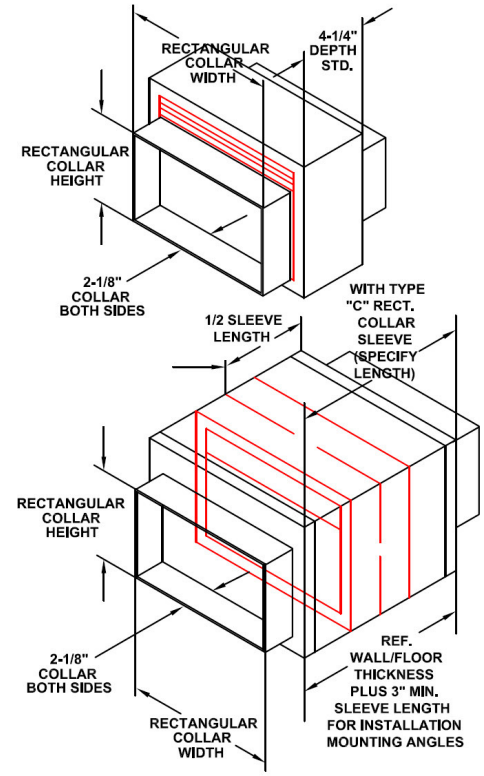


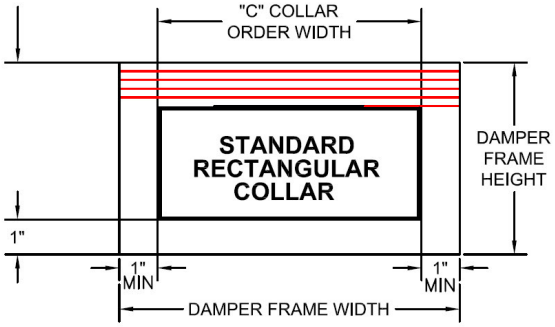


231 Commerce Dr. Montgomeryville, PA 18936
Tel: 215-412-4445 Fax: 215-412-4409
Email: lloydind@firedamper.com

138 Industrial Loop West, Orange Park, FL 32073
Tel: 904-541-1655 Fax: 904-541-1657
Email: lloydind1@firedamper.com

B1, 4/F., Luen Ming Hing Factory Building
36 Mok Cheong St.,
To Kwa Wan, Kowloon, H. K.
Tel: 852-2760-4188 Fax: 852-2760-4177
Email: tatanlexyim@lloydasia.com

Website: www.firedamper.com

*ALL STATED SPECIFICATIONS ARE SUBJECT TO UPDATE WITHOUT NOTICE OR OBLIGATION.



Lloyd Industries Inc. 2017

## Standard Rounds Sizing Chart (Model 75-CR and 75-LCR) and (Model 75-CR-DY and 75-LCR-DY)

| Order Size Round Collar Diameter "CR" | Nominal Damper Width "W" | Nominal Damper Height "H" | Damper Installation Rough Opening "W" x "H" |
|---|---|---|---|
| 4 | 6 | 6 | 6 x 6 |
| 5 | 7 | 7 | 7 x 7 |
| 6 | 8 | 8 | 8 x 8 |
| 7 | 9 | 9 | 9 x 9 |
| 8 | 10 | 11 | 10 x 11 |
| 9 | 11 | 12 | 11 x 12 |
| 10 | 12 | 13 | 12 x 13 |
| 11 | 13 | 14 | 13 x 14 |
| 12 | 14 | 15 | 14 x 15 |
| 13 | 15 | 16 | 15 x 16 |
| 14 | 16 | 17 | 16 x 17 |
| 15 | 17 | 18 | 17 x 18 |
| 16 | 18 | 19 | 18 x 19 |
| 17 | 19 | 21 | 19 x 21 |
| 18 | 20 | 22 | 20 x 22 |
| 19 | 21 | 23 | 21 x 23 |
| 20 | 22 | 24 | 22 x 24 |
| 21 | 23 | 25 | 23 x 25 |
| 22 | 24 | 26 | 24 x 26 |
| 23 | 25 | 27 | 25 x 27 |
| 24 | 26 | 28 | 26 x 28 |
| 25 | 27 | 29 | 27 x 29 |
| 26 | 28 | 30 | 28 x 30 |
| 27 | 29 | 32 | 29 x 32 |
| 28 | 30 | 33 | 30 x 33 |
| 29 | 31 | 34 | 31 x 34 |
| 30 | 32 | 35 | 32 x 35 |
| 31 | 33 | 36 | 33 x 36 |
| 32 | 34 | 37 | 34 x 37 |
| 33 | 35 | 38 | 35 x 38 |
| 34 | 36 | 39 | 36 x39 |
| 35 | 37 | 40 | 37 x 40 |
| 36 | 38 | 42 | 38 x 42 |
| 37 | 39 | 43 | 39 x 43 |
| 38 | 40 | 44 | 40 x 44 |
| 39 | 41 | 45 | 41 x 45 |
| 40 | 42 | 46 | 42 x 46 |
| 41 | 43 | 47 | 43 x 47 |
| 42 | 44 | 48 | 44 x 48 |
| 43 | 45 | 49 | 45 x 49 |
| 44 | 46 | 50 | 46 x 50 |
| 45 | 47 | 52 | 47 x 52 |
| 46 | 48 | 53 | 48 x 53 |
| 47 | 49 | 54 | 49 x 54 |
| 48 | 50 | 55 | 50 x 55 |
| 49 | 51 | 56 | 51 x 56 |
| 50 | 52 | 57 | 52 x 57 |
| 51 | 53 | 58 | 53 x 58 |
| 52 | 54 | 59 | 54 x 59 |

ROUND COLLAR DIAMETERS ARE PROVIDED NOMINAL SIZE LESS 1/4"

DAMPER W X H DIMENSIONS ARE PROVIDED NOMINAL SIZE LESS 1/4"

FOR NON-STANDARD DIAMETERS CONSULT THE FACTORY FOR PRICE, AVAILABILITY, AND DELIVERY.

ALL ROUND COLLAR DAMPERS ARE PROVIDED WITH BLADES OUT OF AIR STREAM TO MAXIMIZE FREE AREA & AIR FLOW.

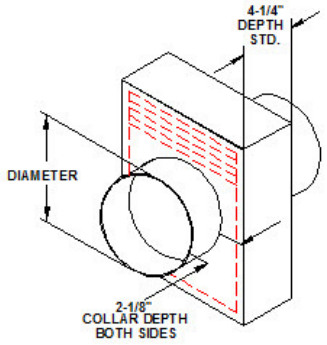


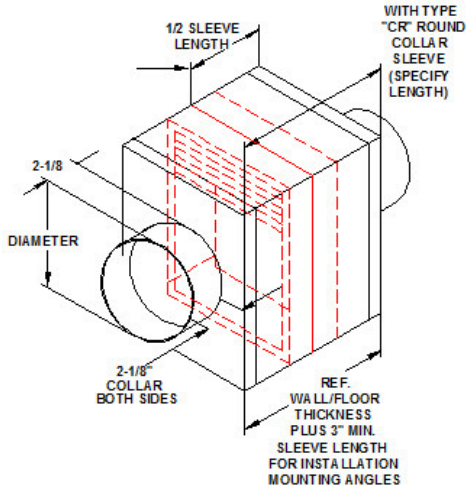


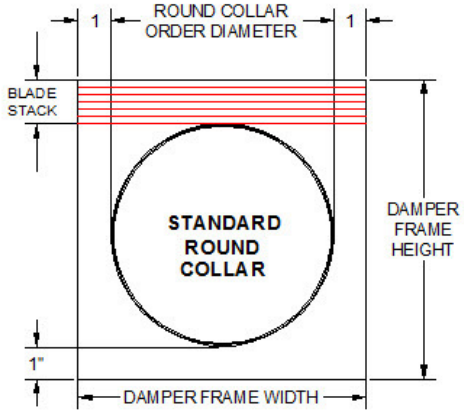


231 Commerce Dr. Montgomeryville, PA 18936
Tel: 215-412-4445 Fax: 215-412-4409
Email: lloydind@firedamper.com

138 Industrial Loop West, Orange Park, FL 32073
Tel: 904-541-1655 Fax: 904-541-1657
Email: lloydind1@firedamper.com

B1, 4/F., Luen Ming Hing Factory Building
36 Mok Cheong St.,
To Kwa Wan, Kowloon, H. K.
Tel: 852-2760-4188 Fax: 852-2760-4177
Email: tatanlexyim@lloydasia.com

Website: www.firedamper.com

*ALL STATED SPECIFICATIONS ARE SUBJECT TO UPDATE WITHOUT NOTICE OR OBLIGATION.



Lloyd Industries Inc. 2017

## Standard Ovals Sizing Chart (Model 75-CO and 75-LCO)

| Round Collar Equivalent | Order Size Oval Collar Width x Height | Damper Instal-lation Rough Opening "W" x "H" |
|---|---|---|
| 3-1/4" Height Oval Collar | | |
| 4" | 4.413x3.250 | 6-3/8x5-1/4 |
| 5" | 5.999x3.250 | 8 x 5-1/4 |
| 6" | 7.569x3.250 | 9-9/16 x 5-1/4 |
| 7" | 9.140x3.250 | 11-1/8 x 5-1/4 |
| 8" | 10.711x3.250 | 12-3/4 x 5-1/4 |
| 9" | 12.282x3.250 | 14-1/4 x 5-1/4 |
| 10" | 13.853x3.250 | 15-7/8 x 5-1/4 |
| 12" | 16.994x3.250 | 19 x 5-1/4 |
| 14" | 20.136x3.250 | 22-1/8 x 5-1/4 |
| 16" | 25.277x3.250 | 27-1/4 x 5-1/4 |

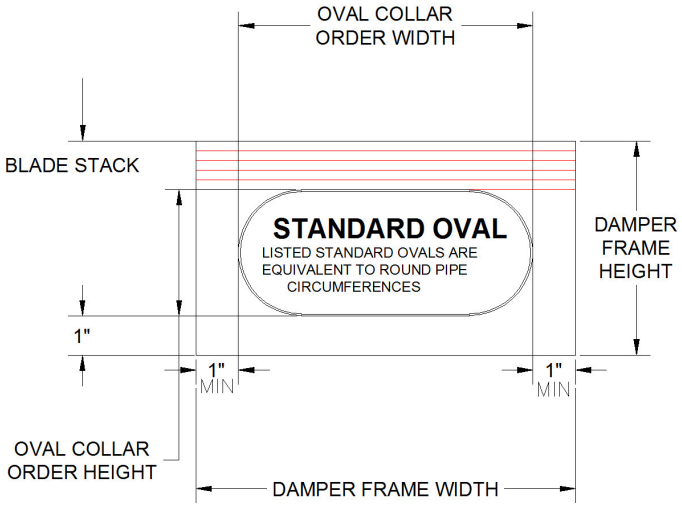


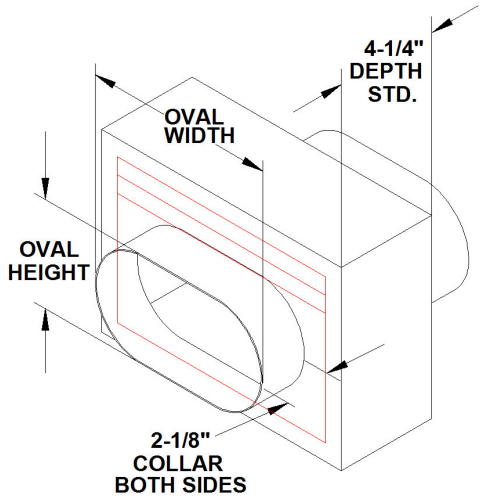


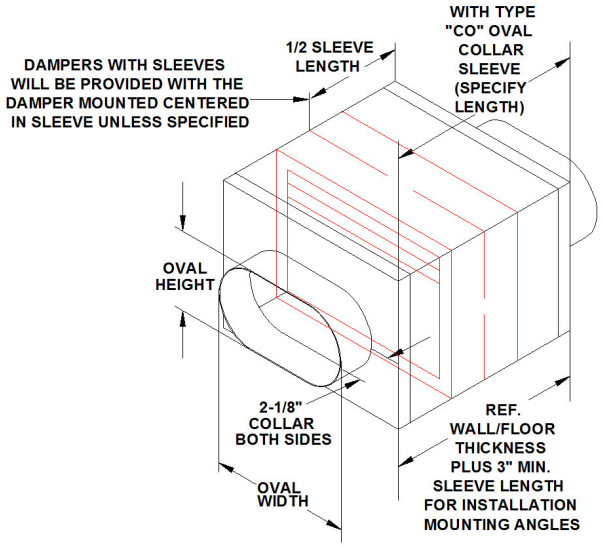


NOTES:
1. ORDER DAMPERS PROVIDING OVAL COLLAR WIDTH "W" X OVAL COLLAR HEIGHT "H". (REFER TO ROUND EQUIV.)
2. THE LISTED OVAL SIZES REPRESENT ROUND DUCT CIRCUMFERENCE EQUIVILANTS.
3. DAMPERS WILL BE PROVIDED TO THE LISTED NOMINAL SIZES LESS 1/4".
4. OVAL COLLARS WILL BE PROVIDED NOMINAL SIZE LESS 1/4".
5. FOR NON-STANDARD OVAL SIZES CONSULT THE FACTORY FOR PRICE AND DELIVERY.
6. ALL OVAL DAMPERS ARE PROVIDED WITH BLADES OUT OF THE AIR STREAM TO MAXIMIZE FREE AREA & AIR FLOW.



Lloyd Industries Inc. 2017

# DYNAMIC FIRE DAMPER



**MODEL:**
**75A-DY (1-1/2 HR rating)**

## APPLICATION

The model 75A-DY is constructed with galvanized steel and blades in the airstream. 75A-DY is 1-1/2 hour UL rated dynamic damper for use in HVAC systems that remain in operation during a fire. The unit can be installed vertically in walls or horizontally in floors.

## RATING:

**UL CLASSIFIED**: UL 555 Fire Resistance Rating
Fire resistance rated 1-1/2 Hours
Building materials rated in 2 hours fire partition

## Standard Construction

| | |
|---|---|
| Frame: | 22 Ga. galvanized steel |
| Blade: | 22 Ga. galvanized steel |
| Closure Spring: | Stainless steel |
| Fusible Link: | 165°F |
| Mounting: | Horizontal or vertical |

**Optional Material:**
Type 316 stainless steal

Dynamic Fire Dampers:
Bi-directional
2000 FPM maximum velocity
4.0 WG maximum static pressure

Features horizontal closure spring operation under airflow in HVAC systems where fans remain running in Fire and smoke control. Dynamic fire dampers bear a label attesting to airflow and maximum static pressure limits.

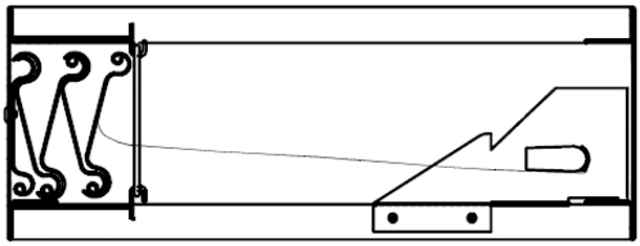

HORIZONTAL MOUNT

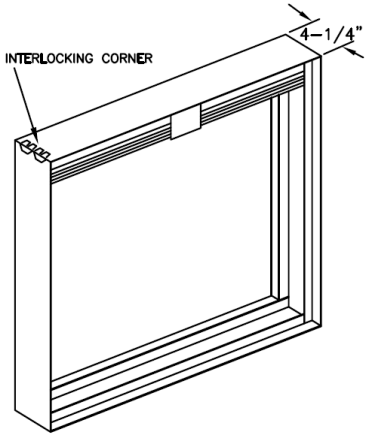


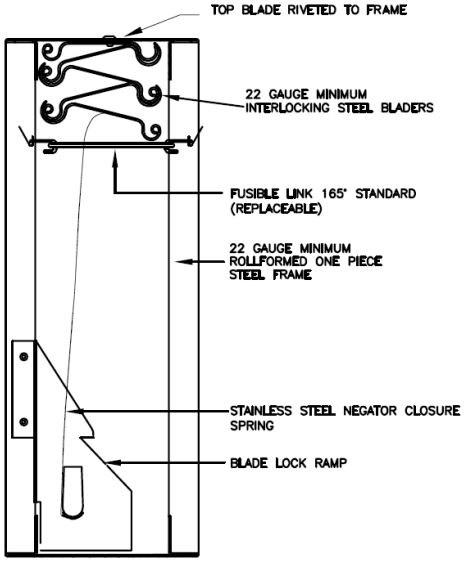


VERTICAL MOUNT

| | Single Section | | Multiple Section |
|---|---|---|---|
| | Minimum Size (WxH) | Maximum Size (WxH) | Maximum Size (WxH) |
| Vertical | 4"x4" | 24"x24" | Consult factory for availability |
| Horizontal | 4"x4" | 24"x24" | Consult factory for |

231 Commerce Dr. Montgomeryville, PA 18936
Tel: 215-412-4445 Fax: 215-412-4409
Email: lloydind@firedamper.com

138 Industrial Loop West, Orange Park, FL 32073
Tel: 904-541-1655 Fax: 904-541-1657
Email: lloydind1@firedamper.com

B1, 4/F., Luen Ming Hing Factory Building
36 Mok Cheong St.,
To Kwa Wan, Kowloon, H. K.
Tel: 852-2760-4188 Fax: 852-2760-4177
Email: tatanlexyim@lloydasia.com

Website: www.firedamper.com

*ALL STATED SPECIFICATIONS ARE SUBJECT TO UPDATE WITHOUT NOTICE OR OBLIGATION.



Lloyd Industries Inc. 2017

# DYNAMIC FIRE DAMPER



**MODEL:**
**75B-DY (1-1/2 HR rating)**

## APPLICATION

The model 75B-DY is constructed with galvanized steel and blades out of the airstream. 75B-DY is 1-1/2 hour UL rated dynamic damper for use in HVAC systems that remain in operation during a fire. The unit can be installed vertically in walls or horizontally in floors.

## RATING:

**UL CLASSIFIED**: UL 555 Fire Resistance Rating
Fire resistance rated 1-1/2 Hours
Building materials rated in 2 hours fire partition

## Standard Construction

| | |
|---|---|
| Frame: | 22 Ga. galvanized steel |
| Blade: | 22 Ga. galvanized steel |
| Closure Spring: | Stainless steel |
| Fusible Link: | 165°F |
| Mounting: | Horizontal or vertical |

**Optional Material:**
Type 316 stainless steal

Dynamic Fire Dampers:
Bi-directional
2000 FPM maximum velocity
4.0 WG maximum static pressure

Features horizontal closure spring operation under airflow in HVAC systems where fans remain running in Fire and smoke control. Dynamic fire dampers bear a label attesting to airflow and maximum static pressure limits.

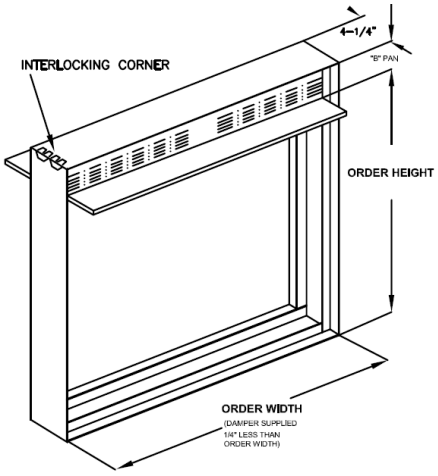


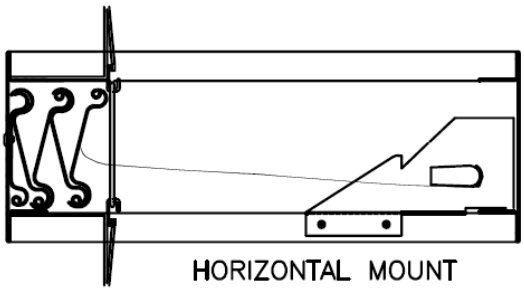


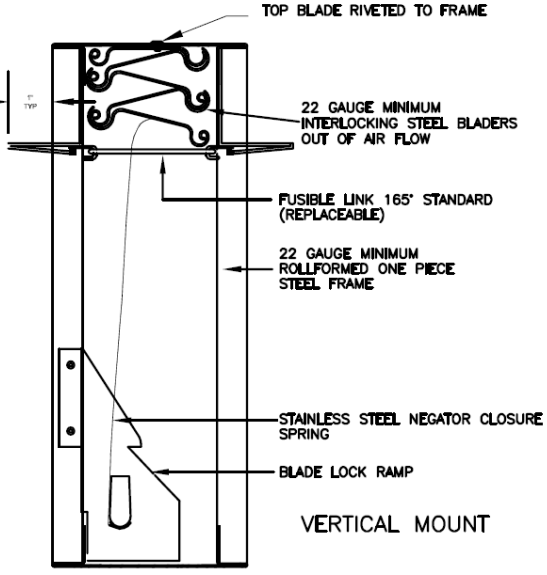


| | Single Section | | Multiple Section |
|---|---|---|---|
| | Minimum Size (WxH) | Maximum Size (WxH) | Maximum Size (WxH) |
| Vertical | 4"x4" | 24"x24" | Consult factory for availability |
| Horizontal | 4"x4" | 24"x24" | Consult factory for |

231 Commerce Dr. Montgomeryville, PA 18936
Tel: 215-412-4445 Fax: 215-412-4409
Email: lloydind@firedamper.com

138 Industrial Loop West, Orange Park, FL 32073
Tel: 904-541-1655 Fax: 904-541-1657
Email: lloydind1@firedamper.com

B1, 4/F., Luen Ming Hing Factory Building
36 Mok Cheong St.,
To Kwa Wan, Kowloon, H. K.
Tel: 852-2760-4188 Fax: 852-2760-4177
Email: tatanlexyim@lloydasia.com

Website: www.firedamper.com

*ALL STATED SPECIFICATIONS ARE SUBJECT TO UPDATE WITHOUT NOTICE OR OBLIGATION.



Lloyd Industries Inc. 2017

# DYNAMIC FIRE DAMPER



**MODEL:**
**75C-DY (1-1/2 HR rating)**

## APPLICATION

The model 75C-DY is constructed with galvanized steel and blades out of the airstream. 75C-DY is 1-1/2 hour UL rated dynamic damper for use in HVAC systems that remain in operation during a fire. The unit can be installed vertically in walls or horizontally in floors.

## RATING:

**UL CLASSIFIED**: UL 555 Fire Resistance Rating
Fire resistance rated 1-1/2 Hours
Building materials rated in 2 hours fire partition

## Standard Construction

| | |
|---|---|
| Frame: | 22 Ga. galvanized steel |
| Blade: | 22 Ga. galvanized steel |
| Closure Spring: | Stainless steel |
| Fusible Link: | 165°F |
| Mounting: | Horizontal or vertical |

**Optional Material:**
Type 316 stainless steal

Dynamic Fire Dampers:
Bi-directional
2000 FPM maximum velocity
4.0 WG maximum static pressure

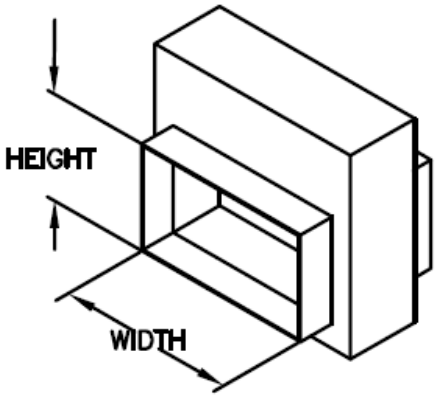


Features horizontal closure spring operation under airflow in HVAC systems where fans remain running in Fire and smoke control. Dynamic fire dampers bear a label attesting to airflow and maximum static pressure limits.

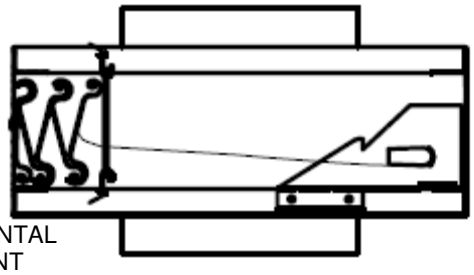

HORIZONTAL MOUNT

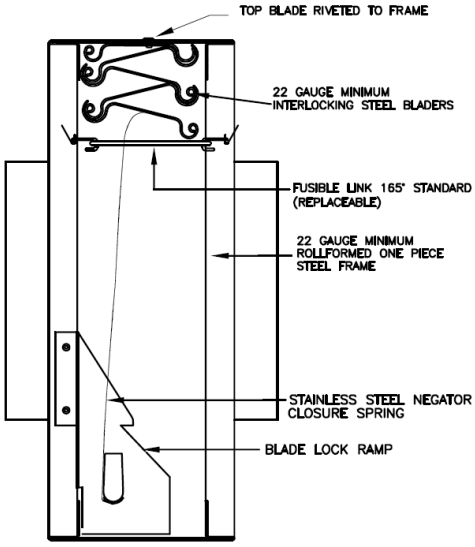


VERTICAL MOUNT

| | Single Section | | Multiple Section |
|---|---|---|---|
| | Minimum Size (WxH) | Maximum Size (WxH) | Maximum Size (WxH) |
| Vertical | 4"x4" | 24"x24" | Consult factory for availability |
| Horizontal | 4"x4" | 24"x24" | Consult factory for |

231 Commerce Dr. Montgomeryville, PA 18936
Tel: 215-412-4445 Fax: 215-412-4409
Email: lloydind@firedamper.com

138 Industrial Loop West, Orange Park, FL 32073
Tel: 904-541-1655 Fax: 904-541-1657
Email: lloydind1@firedamper.com

B1, 4/F., Luen Ming Hing Factory Building
36 Mok Cheong St.,
To Kwa Wan, Kowloon, H. K.
Tel: 852-2760-4188 Fax: 852-2760-4177
Email: tatanlexyim@lloydasia.com

Website: www.firedamper.com

*ALL STATED SPECIFICATIONS ARE SUBJECT TO UPDATE WITHOUT NOTICE OR OBLIGATION.



Lloyd Industries Inc. 2017

# LLOYD INDUSTRIES INC.

WWW.FIREDAMPER.COM

## DYNAMIC FIRE DAMPER

**MODEL:**
**75CO-DY (1-1/2 HR rating)**



### APPLICATION

The model 75CO-DY is constructed galvanized steel and blades out of the airstream. 75CO-DY is 1-1/2 hour UL rated dynamic damper for use in HVAC systems that remain in operation during a fire. The unit can be installed vertically in walls or horizontally in floors.

### RATING:

**UL CLASSIFIED**: UL 555 Fire Resistance Rating
Fire resistance rated 1-1/2 Hours
Building materials rated in 2 hours fire partition

### Standard Construction

| | |
|---|---|
| Frame: | 22 Ga. galvanized steel |
| Blade: | 22 Ga. galvanized steel |
| Closure Spring: | Stainless steel |
| Fusible Link: | 165°F |
| Mounting: | Horizontal or vertical |

**Optional Material:**
Type 316 stainless steal

Dynamic Fire Dampers:
Bi-directional
2000 FPM maximum velocity
4.0 WG maximum static pressure

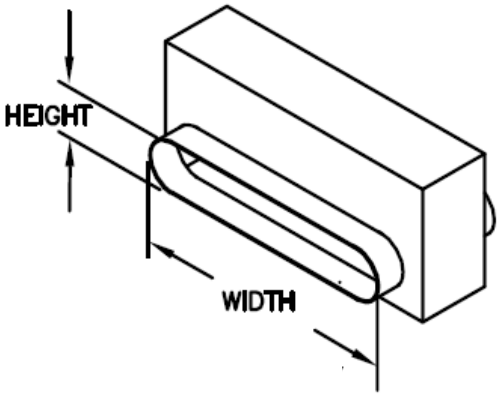


Features horizontal closure spring operation under airflow in HVAC systems where fans remain running in Fire and smoke control. Dynamic fire dampers bear a label attesting to airflow and maximum static pressure limits.

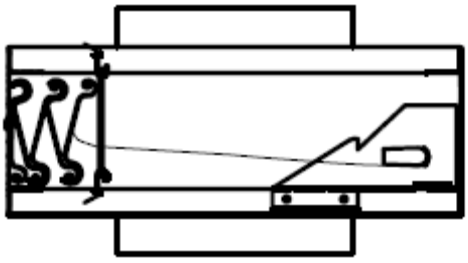

HORIZONTAL MOUNT

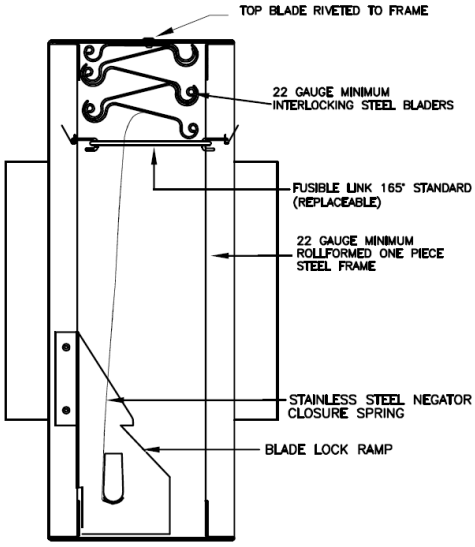


VERTICAL MOUNT

| | Single Section | | Multiple Section |
|---|---|---|---|
| | Minimum Size (WxH) | Maximum Size (WxH) | Maximum Size (WxH) |
| Vertical | 4"x4" | 24"x24" | Consult factory for availability |
| Horizontal | 4"x4" | 24"x24" | Consult factory for |

231 Commerce Dr. Montgomeryville, PA 18936
Tel: 215-412-4445 Fax: 215-412-4409
Email: lloydind@firedamper.com

138 Industrial Loop West, Orange Park, FL 32073
Tel: 904-541-1655 Fax: 904-541-1657
Email: lloydind1@firedamper.com

B1, 4/F., Luen Ming Hing Factory Building
36 Mok Cheong St.,
To Kwa Wan, Kowloon, H. K.
Tel: 852-2760-4188 Fax: 852-2760-4177
Email: tatanlexyim@lloydasia.com

Website: www.firedamper.com

*ALL STATED SPECIFICATIONS ARE SUBJECT TO UPDATE WITHOUT NOTICE OR OBLIGATION.



Lloyd Industries Inc. 2017

# DYNAMIC FIRE DAMPER



**MODEL:**
**75CR-DY (1-1/2 HR rating)**

## APPLICATION

The model 75CR-DY is constructed with galvanized steel and blades out of the airstream. 75CR-DY is 1-1/2 hour UL rated dynamic damper for use in HVAC systems that remain in operation during a fire. The unit can be installed vertically in walls or horizontally in floors.

## RATING:

**UL CLASSIFIED**: UL 555 Fire Resistance Rating
Fire resistance rated 1-1/2 Hours
Building materials rated in 2 hours fire partition

## Standard Construction

| | |
|---|---|
| Frame: | 22 Ga. galvanized steel |
| Blade: | 22 Ga. galvanized steel |
| Closure Spring: | Stainless steel |
| Fusible Link: | 165°F |
| Mounting: | Horizontal or vertical |

**Optional Material:**
Type 316 stainless steal

Dynamic Fire Dampers:
Bi-directional
2000 FPM maximum velocity
4.0 WG maximum static pressure

Features horizontal closure spring operation under airflow in HVAC systems where fans remain running in Fire and smoke control. Dynamic fire dampers bear a label attesting to airflow and maximum static pressure limits.

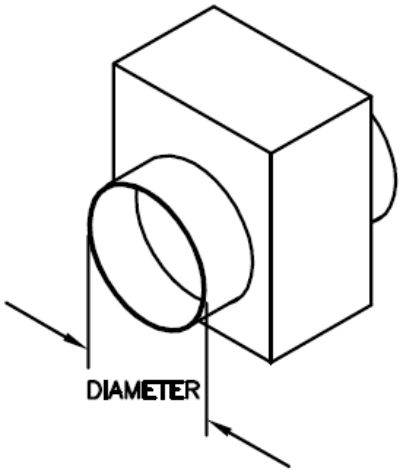


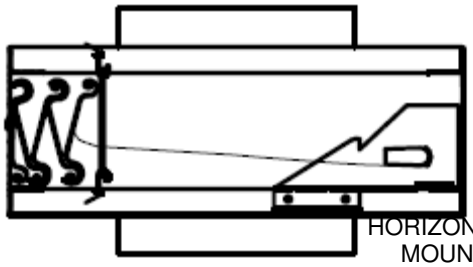


| | Single Section | | Multiple Section |
|---|---|---|---|
| | Minimum Size (WxH) | Maximum Size (WxH) | Maximum Size (WxH) |
| Vertical | 4"x4" | 24"x24" | Consult factory for availability |
| Horizontal | 4"x4" | 24"x24" | Consult factory for |

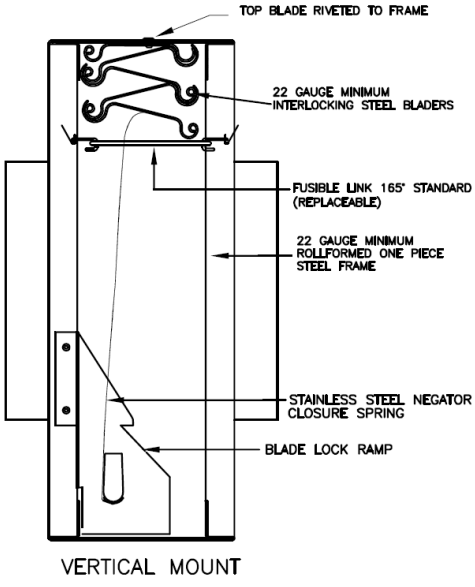


231 Commerce Dr. Montgomeryville, PA 18936
Tel: 215-412-4445 Fax: 215-412-4409
Email: lloydind@firedamper.com

138 Industrial Loop West, Orange Park, FL 32073
Tel: 904-541-1655 Fax: 904-541-1657
Email: lloydind1@firedamper.com

B1, 4/F., Luen Ming Hing Factory Building
36 Mok Cheong St.,
To Kwa Wan, Kowloon, H. K.
Tel: 852-2760-4188 Fax: 852-2760-4177
Email: tatanlexyim@lloydasia.com

Website: www.firedamper.com

*ALL STATED SPECIFICATIONS ARE SUBJECT TO UPDATE WITHOUT NOTICE OR OBLIGATION.



Lloyd Industries Inc. 2017

# DYNAMIC FIRE DAMPER



**MODEL:**
**75D-DY (1-1/2 HR rating)**

## APPLICATION

The model 75D-DY is a thin line damper, constructed with galvanized steel. 75D-DY is 1-1/2 hour UL rated dynamic damper for use in HVAC systems that remain in operation during a fire. The unit can be installed vertically in walls or horizontally in floors .

## RATING:

**UL CLASSIFIED**: UL 555 Fire Resistance Rating
Fire resistance rated 1-1/2 Hours
Building materials rated in 2 hours fire partition

## Standard Construction

| | |
|---|---|
| Frame: | 22 Ga. galvanized steel |
| Blade: | 22 Ga. galvanized steel |
| Closure Spring: | Stainless steel |
| Fusible Link: | 165°F |
| Mounting: | Horizontal or vertical |

**Optional Material:**
Type 316 stainless steal

Dynamic Fire Dampers:
Bi-directional
2400 FPM maximum velocity
4.0 WG maximum static pressure

Features horizontal closure spring operation under airflow in HVAC systems where fans remain running in Fire and smoke control. Dynamic fire dampers bear a label attesting to airflow and maximum static pressure limits.



HORIZONTAL MOUNT

| | Single Section | | Multiple Section |
|---|---|---|---|
| | Minimum Size (WxH) | Maximum Size (WxH) | Maximum Size (WxH) |
| Vertical | 4"x4" | 24"x24" | Consult factory for availability |
| Horizontal | 4"x4" | 24"x24" | Consult factory for |

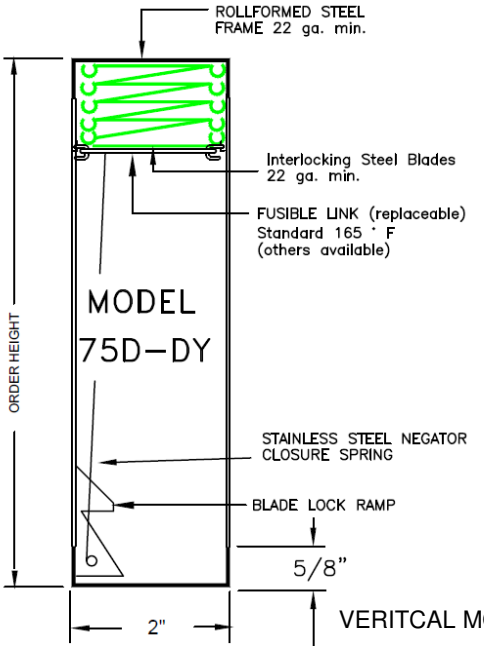


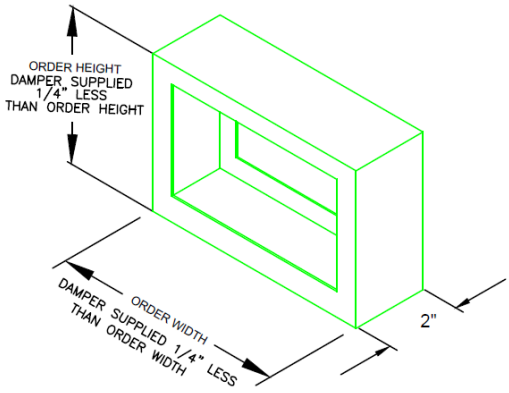


231 Commerce Dr. Montgomeryville, PA 18936
Tel: 215-412-4445 Fax: 215-412-4409
Email: lloydind@firedamper.com

138 Industrial Loop West, Orange Park, FL 32073
Tel: 904-541-1655 Fax: 904-541-1657
Email: lloydind1@firedamper.com

B1, 4/F., Luen Ming Hing Factory Building
36 Mok Cheong St.,
To Kwa Wan, Kowloon, H. K.
Tel: 852-2760-4188 Fax: 852-2760-4177
Email: tatanlexyim@lloydasia.com

Website: www.firedamper.com

*ALL STATED SPECIFICATIONS ARE SUBJECT TO UPDATE WITHOUT NOTICE OR OBLIGATION.



Lloyd Industries Inc. 2017

# DYNAMIC FIRE DAMPER



**MODEL:**
**75DB-DY (1-1/2 HR rating)**

## APPLICATION

The model 75DB-DY is a out of airstream & thin line fire damper constructed with galvanized steel. 75DB-DY is 1-1/2 hour UL rated dynamic damper for use in HVAC systems that remain in operation during a fire. The unit can be installed vertically in walls or horizontally in floors.

## RATING:

**UL CLASSIFIED**: UL 555 Fire Resistance Rating
Fire resistance rated 1-1/2 Hours
Building materials rated in 2 hour fire partition

## Standard Construction

| | |
|---|---|
| Frame: | 22 Ga. galvanized steel |
| Blade: | 22 Ga. galvanized steel |
| Closure Spring: | Stainless steel |
| Fusible Link: | 165°F |
| Mounting: | Horizontal or vertical |

**Optional Material:**
Type 316 stainless steal

Dynamic Fire Dampers:
Bi-directional
2400 FPM maximum velocity
4.0 WG maximum static pressure

Features horizontal closure spring operation under airflow in HVAC systems where fans remain running in Fire and smoke control. Dynamic fire dampers bear a label attesting to airflow and maximum static pressure limits.

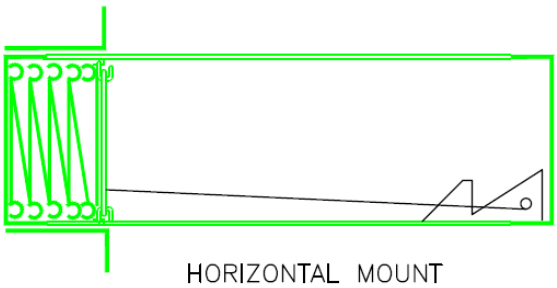

HORIZONTAL MOUNT

| | Single Section | | Multiple Section |
|---|---|---|---|
| | Minimum Size (WxH) | Maximum Size (WxH) | Maximum Size (WxH) |
| Vertical | 4"x4" | 24"x24" | Consult factory for availability |
| Horizontal | 4"x4" | 24"x24" | Consult factory for |

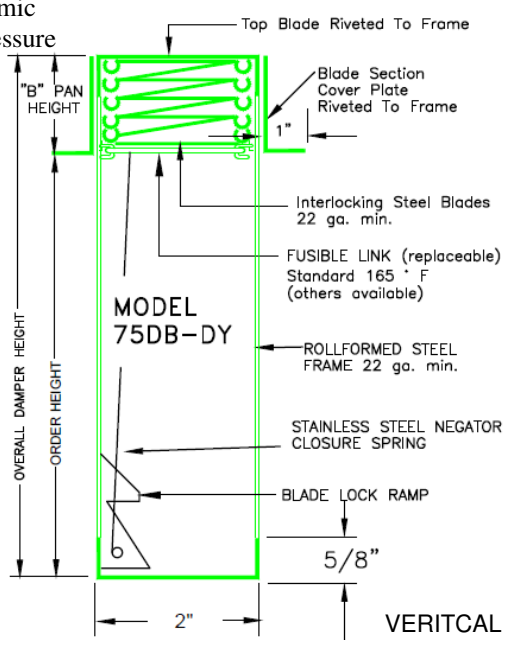


VERITCAL MOUNT

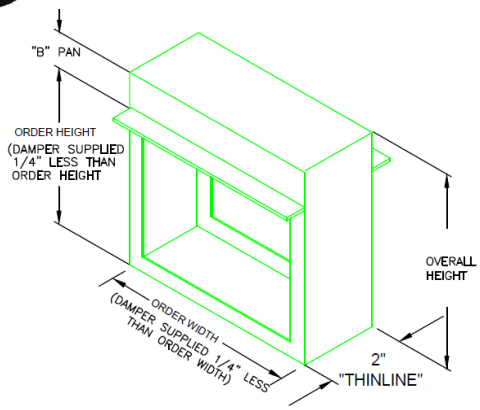


231 Commerce Dr. Montgomeryville, PA 18936
Tel: 215-412-4445 Fax: 215-412-4409
Email: lloydind@firedamper.com

138 Industrial Loop West, Orange Park, FL 32073
Tel: 904-541-1655 Fax: 904-541-1657
Email: lloydind1@firedamper.com

B1, 4/F., Luen Ming Hing Factory Building
36 Mok Cheong St.,
To Kwa Wan, Kowloon, H. K.
Tel: 852-2760-4188 Fax: 852-2760-4177
Email: tatanlexyim@lloydasia.com

Website: www.firedamper.com

*ALL STATED SPECIFICATIONS ARE SUBJECT TO UPDATE WITHOUT NOTICE OR OBLIGATION.



Lloyd Industries Inc. 2017

# DYNAMIC FIRE DAMPER



**MODEL:**
**75L-DY (3 HR rating)**

## APPLICATION

The model 75L-DY is constructed with standard construction galvanized steel. 75L-DY has 3-hour rating so it can be used in fire partition rated at four hours or less. This damper is for vertical application only.

## RATING:

**UL CLASSIFIED**: UL 555 Fire Resistance Rating
Fire resistance rated 3 Hours
Building materials rated in 4 hour fire partition

## Standard Construction

| | |
|---|---|
| Frame: | 22 Ga. Galvanized Steel |
| Blade: | 22 Ga. Galvanized Steel |
| Closure Spring: | Stainless Steel |
| Fusible Link: | 165°F |
| Mounting: | Vertical |

**Optional Material:**
Type 316 stainless steal

Dynamic Fire Dampers:
Bi-directional
2400 FPM maximum velocity
4.0 WG maximum static pressure

Features horizontal closure spring operation under airflow in HVAC
systems where fans remain running in Fire and smoke control. Dynamic fire dampers bear a label attesting to airflow and maximum static pressure limits.

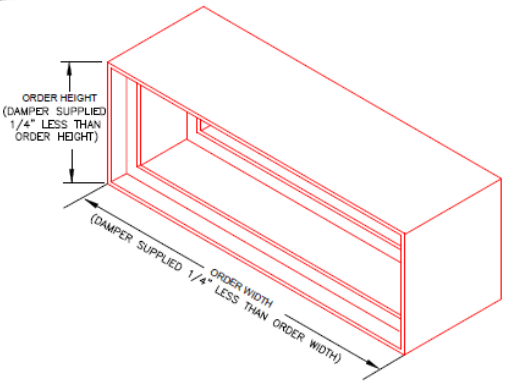


| | Single Section | | Multiple Section |
|---|---|---|---|
| | Minimum Size (WxH) | Maximum Size (WxH) | Maximum Size (WxH) |
| Vertical | 4"x4" | 24"x24" | N/A |
| Horizontal | N/A | N/A | N/A |

*Damper supplied 1/4" less than order width and height

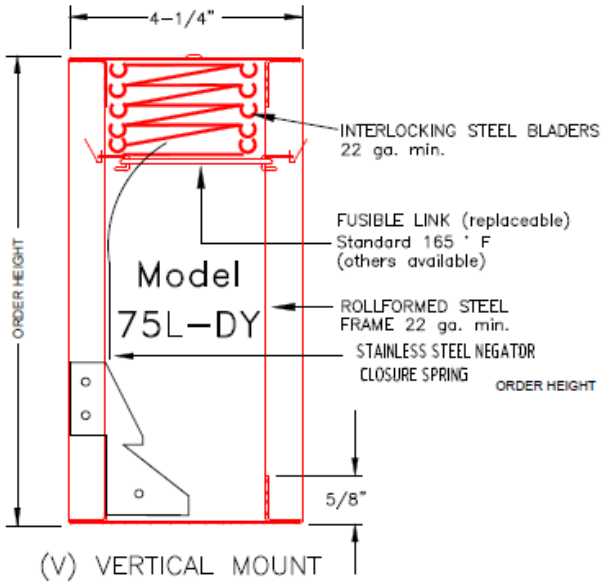


231 Commerce Dr. Montgomeryville, PA 18936
Tel: 215-412-4445 Fax: 215-412-4409
Email: lloydind@firedamper.com

138 Industrial Loop West, Orange Park, FL 32073
Tel: 904-541-1655 Fax: 904-541-1657
Email: lloydind1@firedamper.com

B1, 4/F., Luen Ming Hing Factory Building
36 Mok Cheong St.,
To Kwa Wan, Kowloon, H. K.
Tel: 852-2760-4188 Fax: 852-2760-4177
Email: tatanlexyim@lloydasia.com

Website: www.firedamper.com

*ALL STATED SPECIFICATIONS ARE SUBJECT TO UPDATE WITHOUT NOTICE OR OBLIGATION.



Lloyd Industries Inc. 2017

# DYNAMIC FIRE DAMPER



**MODEL:**
**75LB-DY (3 HR rating)**

## APPLICATION

The model 75LB-DY is a fire damper constructed with galvanized steel, with blades out of the airstream. 75LB-DY has 3-hour rating so it can be used in fire partition rated at four hours or less. This damper is for vertical application only.

## RATING:

**UL CLASSIFIED**: UL 555 Fire Resistance Rating
Fire resistance rated 3 Hours
Building materials rated in 4 hour fire partition

## Standard Construction

| | |
|---|---|
| Frame: | 22 Ga. galvanized steel |
| Blade: | 22 Ga. galvanized steel |
| Closure Spring: | Stainless steel |
| Fusible Link: | 165°F |
| Mounting: | Vertical |

**Optional Material:**
Type 316 stainless steal

Dynamic Fire Dampers:
Bi-directional
2400 FPM maximum velocity
4.0 WG maximum static pressure

Features horizontal closure spring operation under airflow in HVAC systems where fans remain running in Fire and smoke control. Dynamic fire dampers bear a label attesting to airflow and maximum static pressure limits.

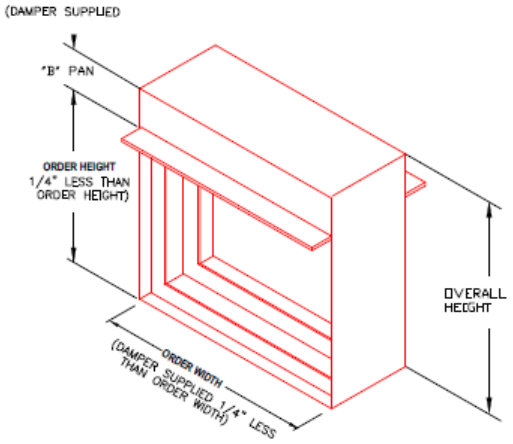


| | Single Section | | Multiple Section |
|---|---|---|---|
| | Minimum Size (WxH) | Maximum Size (WxH) | Maximum Size (WxH) |
| Vertical | 4"x4" | 24"x24" | N/A |
| Horizontal | N/A | N/A | N/A |

*Damper supplied 1/4" less than order width and height

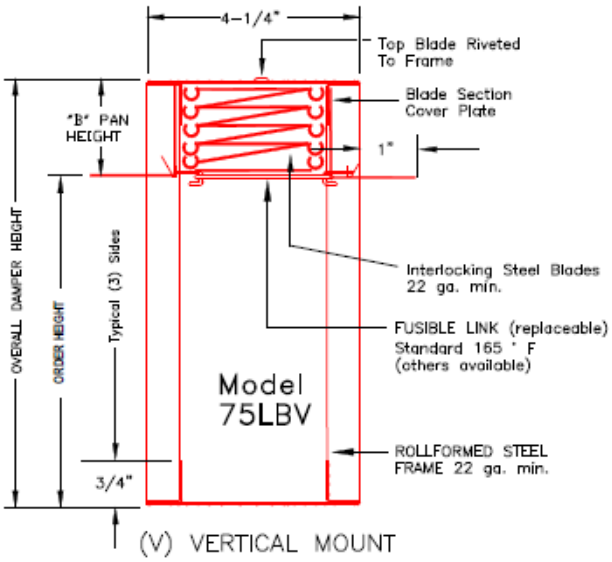


231 Commerce Dr. Montgomeryville, PA 18936
Tel: 215-412-4445 Fax: 215-412-4409
Email: lloydind@firedamper.com

138 Industrial Loop West, Orange Park, FL 32073
Tel: 904-541-1655 Fax: 904-541-1657
Email: lloydind1@firedamper.com

B1, 4/F., Luen Ming Hing Factory Building
36 Mok Cheong St.,
To Kwa Wan, Kowloon, H. K.
Tel: 852-2760-4188 Fax: 852-2760-4177
Email: tatanlexyim@lloydasia.com

Website: www.firedamper.com

*ALL STATED SPECIFICATIONS ARE SUBJECT TO UPDATE WITHOUT NOTICE OR OBLIGATION.



Lloyd Industries Inc. 2017

# DYNAMIC FIRE DAMPER



**MODEL:**
**75LC-DY (3 HR rating)**

## APPLICATION

The model 75LC-DY is constructed with standard construction galvanized steel. 75LC-DY has 3-hour rating so it can be used in fire partition rated at four hours or less. This damper is for vertical application only.

## RATING:

**UL CLASSIFIED**: UL 555 Fire Resistance Rating
Fire resistance rated 3 Hours
Building materials rated in 4 hour fire partition

## Standard Construction

| | |
|---|---|
| Frame: | 22 Ga. galvanized steel |
| Blade: | 22 Ga. galvanized steel |
| Closure Spring: | Stainless steel |
| Fusible Link: | 165°F |
| Mounting: | Vertical |

**Optional Material:**
Type 316 stainless steal

Dynamic Fire Dampers:
Bi-directional
2400 FPM maximum velocity
4.0 WG maximum static pressure

Features horizontal closure spring operation under airflow in HVAC
systems where fans remain running in Fire and smoke control. Dynamic fire dampers bear a label attesting to airflow and maximum static pressure limits.

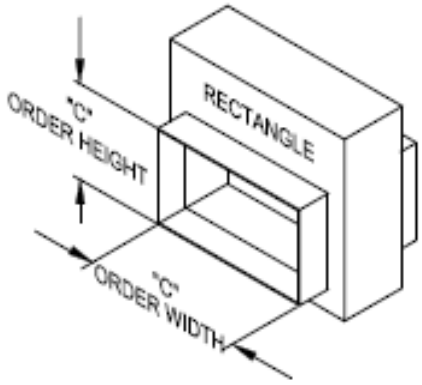


| | Single Section | | |
|---|---|---|---|
| | Maximum Section | Minimum Ø | Maximum Ø |
| Vertical | 24"x24" | 3Ø | 20Ø |
| Horizontal | 24"x24" | 3Ø | 20Ø |

*Damper supplied 1/4" less than order width and height
Highest air flow efficiency for curtain damper.
Damper models with blades and frames "out of air stream".

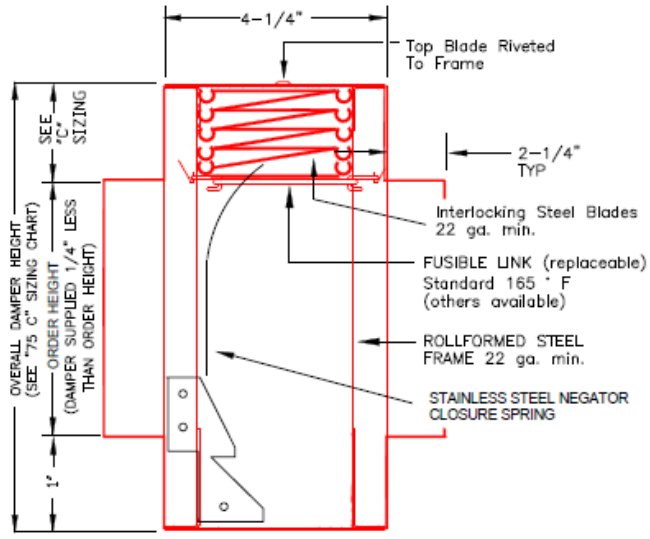


(V) VERTICAL MOUNT

231 Commerce Dr. Montgomeryville, PA 18936
Tel: 215-412-4445 Fax: 215-412-4409
Email: lloydind@firedamper.com

138 Industrial Loop West, Orange Park, FL 32073
Tel: 904-541-1655 Fax: 904-541-1657
Email: lloydind1@firedamper.com

B1, 4/F., Luen Ming Hing Factory Building
36 Mok Cheong St.,
To Kwa Wan, Kowloon, H. K.
Tel: 852-2760-4188 Fax: 852-2760-4177
Email: tatanlexyim@lloydasia.com

Website: www.firedamper.com

*ALL STATED SPECIFICATIONS ARE SUBJECT TO UPDATE WITHOUT NOTICE OR OBLIGATION.



Lloyd Industries Inc. 2017

# DYNAMIC FIRE DAMPER

**MODEL:**
**75LCO-DY (3 HR rating)**



## APPLICATION

The model 75LCO-DY is constructed with galvanized steel. 75LCO-DY has 3-hour rating so it can be used in fire partition rated at four hours or less. This damper is for vertical application only.

## RATING:

**UL CLASSIFIED**: UL 555 Fire Resistance Rating
Fire resistance rated 3 Hours
Building materials rated in 4 hour fire partition

## Standard Construction

| | |
|---|---|
| Frame: | 22 Ga. galvanized steel |
| Blade: | 22 Ga. galvanized steel |
| Closure Spring: | Stainless steel |
| Fusible Link: | 165°F |
| Mounting: | Vertical |

**Optional Material:**
Type 316 stainless steal

Dynamic Fire Dampers:
Bi-directional
2400 FPM maximum velocity
4.0 WG maximum static pressure

Features horizontal closure spring operation under airflow in HVAC
systems where fans remain running in Fire and smoke control. Dynamic fire dampers bear a label attesting to airflow and maximum static pressure limits.

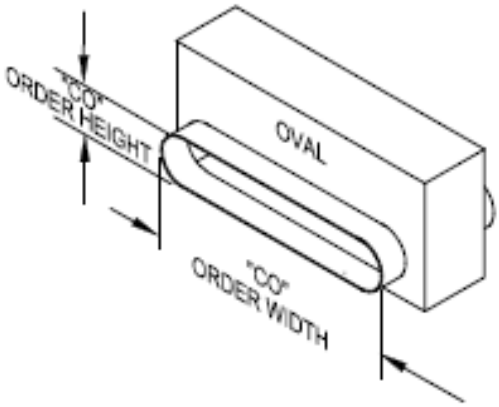


| | Single Section | | |
|---|---|---|---|
| | Maximum Section | Minimum Ø | Maximum Ø |
| Vertical | 24"x24" | 3Ø | 20Ø |
| Horizontal | N/A | N/A | N/A |

*Damper supplied 1/4" less than order width and height
Highest air flow efficiency for curtain damper.
Damper models with blades and frames "out of air stream".

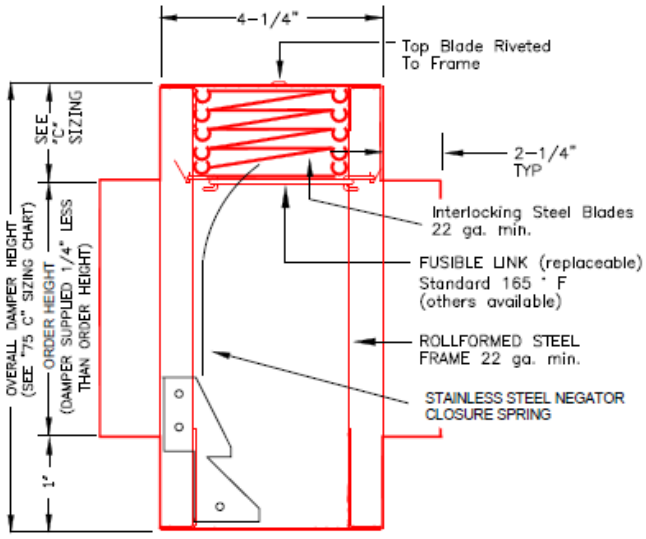


(V) VERTICAL MOUNT

231 Commerce Dr. Montgomeryville, PA 18936
Tel: 215-412-4445 Fax: 215-412-4409
Email: lloydind@firedamper.com

138 Industrial Loop West, Orange Park, FL 32073
Tel: 904-541-1655 Fax: 904-541-1657
Email: lloydind1@firedamper.com

B1, 4/F., Luen Ming Hing Factory Building
36 Mok Cheong St.,
To Kwa Wan, Kowloon, H. K.
Tel: 852-2760-4188 Fax: 852-2760-4177
Email: tatanlexyim@lloydasia.com

Website: www.firedamper.com

*ALL STATED SPECIFICATIONS ARE SUBJECT TO UPDATE WITHOUT NOTICE OR OBLIGATION.



Lloyd Industries Inc. 2017

# DYNAMIC FIRE DAMPER



**MODEL:**
**75LCR-DY (3 HR rating)**

## APPLICATION

The model 75LCR-DY is constructed with galvanized steel. 75LCR-DY has 3-hour rating so it can be used in fire partition rated at four hours or less. This damper is for vertical application only.

## RATING:

**UL CLASSIFIED**: UL 555 Fire Resistance Rating
Fire resistance rated 3 Hours
Building materials rated in 4 hour fire partition

## Standard Construction

| | |
|---|---|
| Frame: | 22 Ga. galvanized steel |
| Blade: | 22 Ga. galvanized steel |
| Closure Spring: | Stainless steel |
| Fusible Link: | 165°F |
| Mounting: | Vertical |

**Optional Material:**
Type 316 stainless steal

Dynamic Fire Dampers:
Bi-directional
2400 FPM maximum velocity
4.0 WG maximum static pressure

Features horizontal closure spring operation under airflow in HVAC
systems where fans remain running in Fire and smoke control. Dynamic fire dampers bear a label attesting to airflow and maximum static pressure limits.

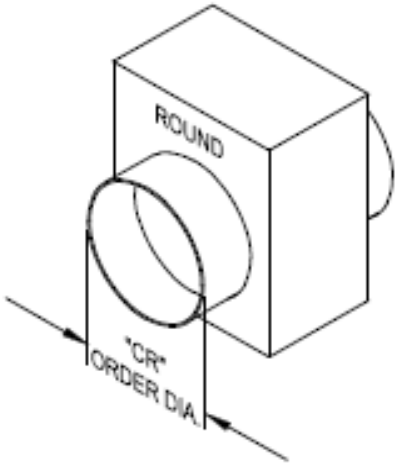


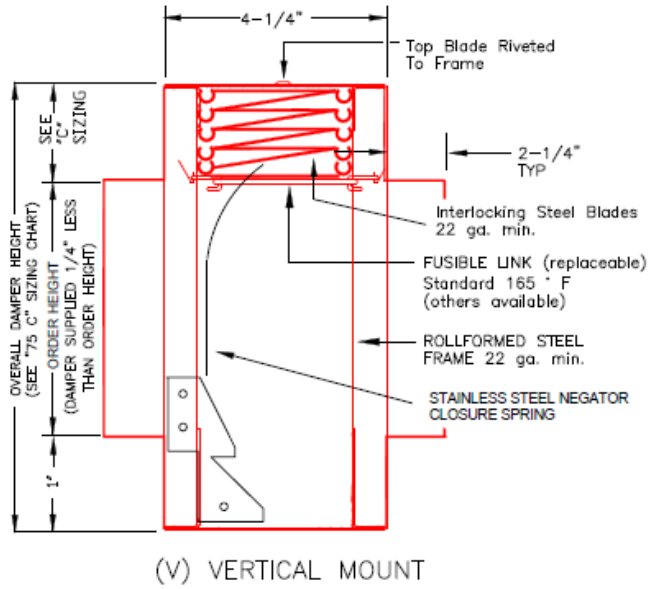


(V) VERTICAL MOUNT

| | Single Section | | |
|---|---|---|---|
| | Maximum Section | Minimum Ø | Maximum Ø |
| Vertical | 24"x24" | 3Ø | 20Ø |
| Horizontal | N/A | N/A | N/A |

*Damper supplied 1/4" less than order width and height
Highest air flow efficiency for curtain damper.
Damper models with blades and frames "out of air stream".

231 Commerce Dr. Montgomeryville, PA 18936
Tel: 215-412-4445 Fax: 215-412-4409
Email: lloydind@firedamper.com

138 Industrial Loop West, Orange Park, FL 32073
Tel: 904-541-1655 Fax: 904-541-1657
Email: lloydind1@firedamper.com

B1, 4/F., Luen Ming Hing Factory Building
36 Mok Cheong St.,
To Kwa Wan, Kowloon, H. K.
Tel: 852-2760-4188 Fax: 852-2760-4177
Email: tatanlexyim@lloydasia.com

Website: www.firedamper.com

*ALL STATED SPECIFICATIONS ARE SUBJECT TO UPDATE WITHOUT NOTICE OR OBLIGATION.



Lloyd Industries Inc. 2017

# DYNAMIC FIRE DAMPER



**MODEL:**
**75N-DY (3 HR rating)**

## APPLICATION

The model 75N-DY is constructed with galvanized steel. 75N-DY has 3-hour rating so it can be used in fire partition rated at four hours or less. This damper is for vertical application only.

## RATING:

**UL CLASSIFIED**: UL 555 Fire Resistance Rating
Fire resistance rated 3 Hours
Building materials rated in 4 hour fire partition

## Standard Construction

| | |
|---|---|
| Frame: | 22 Ga. galvanized steel |
| Blade: | 22 Ga. galvanized steel |
| Closure Spring: | Stainless steel |
| Fusible Link: | 165°F |
| Mounting: | Vertical |

**Optional Material:**
Type 316 stainless steal

Dynamic Fire Dampers:
Bi-directional
2400 FPM maximum velocity
4.0 WG maximum static pressure

Features horizontal closure spring operation under airflow in HVAC
systems where fans remain running in Fire and smoke control. Dynamic fire dampers bear a label attesting to airflow and maximum static pressure limits.

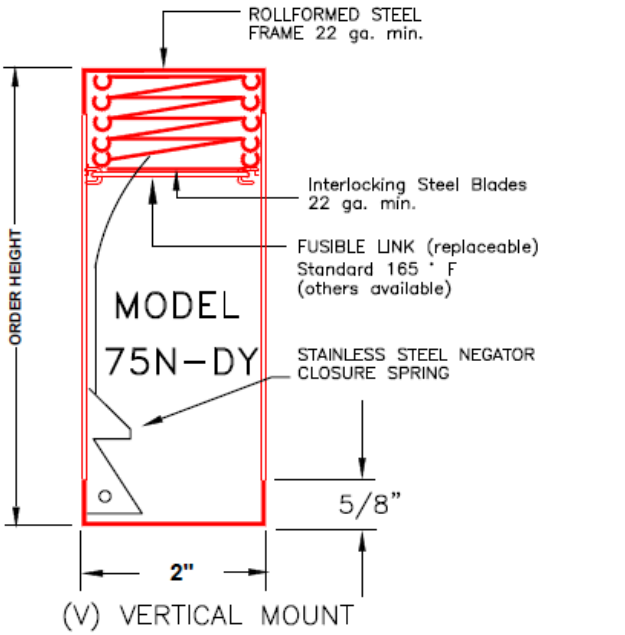


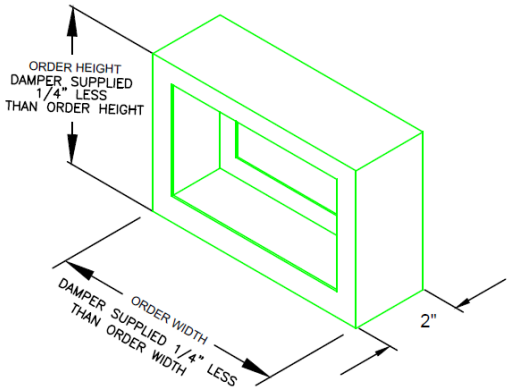


| | Single Section | | Multiple Section |
|---|---|---|---|
| | Minimum Size (WxH) | Maximum Size (WxH) | Maximum Size (WxH) |
| Vertical | 4"x4" | 24"x24" | N/A |
| Horizontal | N/A | N/A | N/A |

*Damper supplied 1/4" less than order width and height
"Thinline" damper model with blades "in air stream".

231 Commerce Dr. Montgomeryville, PA 18936
Tel: 215-412-4445 Fax: 215-412-4409
Email: lloydind@firedamper.com

138 Industrial Loop West, Orange Park, FL 32073
Tel: 904-541-1655 Fax: 904-541-1657
Email: lloydind1@firedamper.com

B1, 4/F., Luen Ming Hing Factory Building
36 Mok Cheong St.,
To Kwa Wan, Kowloon, H. K.
Tel: 852-2760-4188 Fax: 852-2760-4177
Email: tatanlexyim@lloydasia.com

Website: www.firedamper.com

*ALL STATED SPECIFICATIONS ARE SUBJECT TO UPDATE WITHOUT NOTICE OR OBLIGATION.



Lloyd Industries Inc. 2017

# DYNAMIC FIRE DAMPER

**MODEL:**
**75NB-DY (3 HR rating)**



## APPLICATION

The model 75NB-DY is a out of airstream fire damper constructed with galvanized steel. 75NB-DY has 3-hour rating so it can be used in fire partition rated at four hours or less. This damper is for vertical application only.

## RATING:

**UL CLASSIFIED**: UL 555 Fire Resistance Rating
Fire resistance rated 3 Hours
Building materials rated in 4 hour fire partition

## Standard Construction

| | |
|---|---|
| Frame: | 22 Ga. galvanized steel |
| Blade: | 22 Ga. galvanized steel |
| Closure Spring: | Stainless steel |
| Fusible Link: | 165°F |
| Mounting: | Vertical |

**Optional Material:**
Type 316 stainless steal

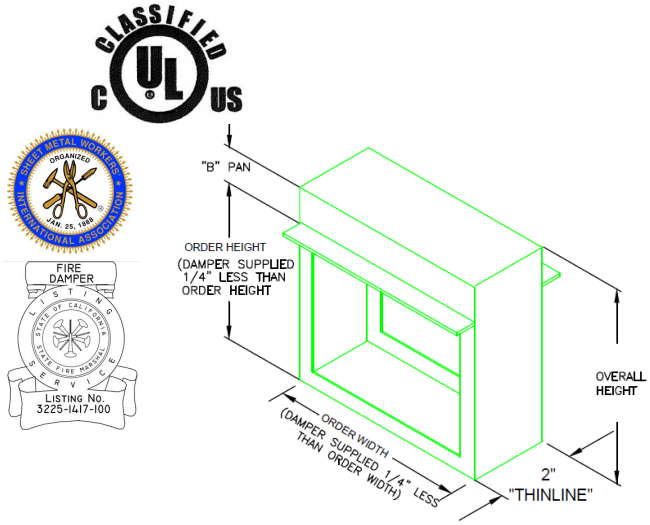


Dynamic Fire Dampers:
Bi-directional
2400 FPM maximum velocity
4.0 WG maximum static pressure

Features horizontal closure spring operation under airflow in HVAC systems where fans remain running in Fire and smoke control. Dynamic fire dampers bear a label attesting to airflow and maximum static pressure limits.

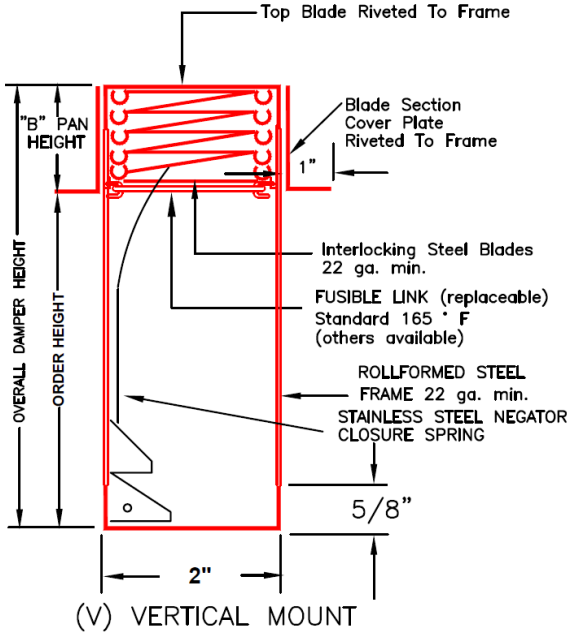


| | Single Section | | Multiple Section |
|---|---|---|---|
| | Minimum Size (WxH) | Maximum Size (WxH) | Maximum Size (WxH) |
| Vertical | 4"x4" | 24"x24" | N/A |
| Horizontal | N/A | N/A | N/A |

*Damper supplied 1/4" less than order width and height
"Thinline" damper model with blades "in air stream".

231 Commerce Dr. Montgomeryville, PA 18936
Tel: 215-412-4445 Fax: 215-412-4409
Email: lloydind@firedamper.com

138 Industrial Loop West, Orange Park, FL 32073
Tel: 904-541-1655 Fax: 904-541-1657
Email: lloydind1@firedamper.com

B1, 4/F., Luen Ming Hing Factory Building
36 Mok Cheong St.,
To Kwa Wan, Kowloon, H. K.
Tel: 852-2760-4188 Fax: 852-2760-4177
Email: tatanlexyim@lloydasia.com

Website: www.firedamper.com

*ALL STATED SPECIFICATIONS ARE SUBJECT TO UPDATE WITHOUT NOTICE OR OBLIGATION.



Lloyd Industries Inc. 2017

# DYNAMIC FIRE DAMPER

**MODEL:**
**75 ETL**




**PICTURE OF ETL**
**(ELECTRO-THERMAL LINK)**

## APPLICATION

The model 75 fire dampers (1-1/2 hour) are available with electro-thermal link (ETL) in all sizes for any particular type damper. It is for horizontal and vertical mountings.

## RATING:

**UL CLASSIFIED**: UL 555 Fire Resistance Rating
Fire resistance rated 1-1/2 Hours
Building materials rated in 2 hour fire partition

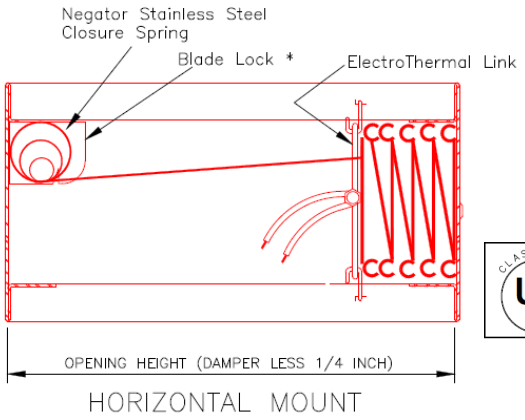


FIRE DAMPER
LISTING No. 3225-1417-100

CLASSIFIED UL
UNDERWRITERS LABORATORIES
CLASSIFIED FUSIBLE LINK
USED WITH FIRE DAMPERS.

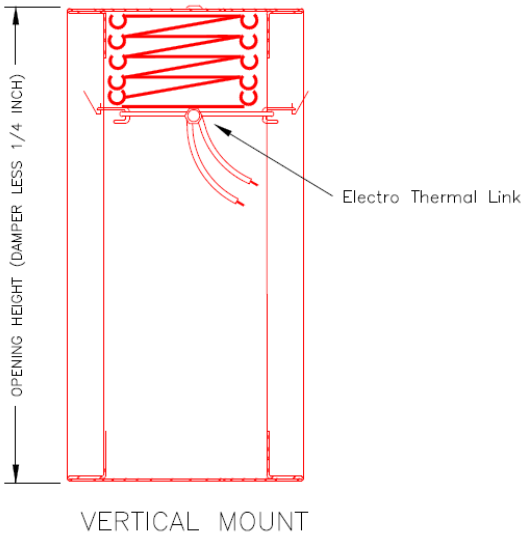


**What it is and what it does**

The Electro Thermal Link (ETL) is a multipurpose dual-responsive fusible link which reacts (melts) when subjected to:

1. Local heat (165°F) exactly the same as an ordinary link.
2. External electrical impulse of low power and a short duration.

It is specifically designed to substitute for ordinary links and/or other actuators in existing and new installations of:

Fire Dampers & Doors, Fire & Smoke Roof Hatches, Fire Extinguishers, Sprinklers, Smoke Towers, and gas or chemical Automatic Release Systems. The substitution should be made in every installation of the above devices where it is desirable for those devices to respond to:

Smoke in the early form of invisible products of combustion through ionization detectors, or fire at the earlier stage than ordinary links thru the use of rate of rise or maximum temperature devices.

The ETL's electro-response is the unique feature. It is not smoke responsive of itself, but its power requirement is so low that it can be released with an electrical impulse from any smoke detector's power source. It is compatible with every smoke detector on the market in the United States today.

The operating range is 6 to 30 volts AC or DC, less than 0.2 ampere of trip current required, and 1/2 millisecond (.0005 sec.) response at 24v. The electrical response is a trigger for the chemical heating of the center element which is a self-contained exo-thermic reactor, yielding no noise, smoke or gas--just quick heat to open the link in 7 seconds.

The ETL's thermal response is identical to that of ordinary fusible links of identical temperature (165°F) and strength (40 #) rating.
In its capacity of converting a FIRE safety device into a FIRE/SMOKE safety device, the ETL can be substituted for both an ordinary link and motor, or link and electro-magnetic operator with advantages of simplicity, operational reliability, wide acceptability and economy. With its dual responsiveness, the ETL can be substituted for two other devices at a savings in first cost as well as operating cost and maintenance. The ETL is built to zero defect standards and to last at least fifty years and then still react properly-only on fire or smoke emergency. It is independent of power failures since it draws power from the detector standby source if needed. The ETL is listed by Underwriters' Laboratories, Inc. as a Fusible Link, and also has become the basis of a new UL test procedure for electro-chemical servo mechanisms.

231 Commerce Dr. Montgomeryville, PA 18936
Tel: 215-412-4445 Fax: 215-412-4409
Email: lloydind@firedamper.com

138 Industrial Loop West, Orange Park, FL 32073
Tel: 904-541-1655 Fax: 904-541-1657
Email: lloydind1@firedamper.com

B1, 4/F., Luen Ming Hing Factory Building
36 Mok Cheong St.,
To Kwa Wan, Kowloon, H. K.
Tel: 852-2760-4188 Fax: 852-2760-4177
Email: tatanlexyim@lloydasia.com

Website: www.firedamper.com

*ALL STATED SPECIFICATIONS ARE SUBJECT TO UPDATE WITHOUT NOTICE OR OBLIGATION.



Lloyd Industries Inc. 2017

# LLOYD INDUSTRIES INC.

WWW.FIREDAMPER.COM

## DYNAMIC FIRE DAMPER



**MODEL:**
**FD-111-PB**

### APPLICATION

The FD-111-PB is a multi-blade dynamic fire damper approved for use in walls, floors and partitions with fire resistance ratings less than 2 hours. This model carries a 1-1/2 hour UL fire damper label. UL 555 classifies dynamic rated fire dampers for use in HVAC

### STANDARD CONSTRUCTION

**FRAME:** 16 Ga. (1.5mm) Galvanized steel Interlocking stacked hat section Channel frame construction

**BLADES :** 16 Ga. Galvanized 3 "V" formed Parallel Blade

**BEARINGS:** Sintered Bronze, oil impregnated

**AXLES:** 1/2 Sq. zinc plated steel studs

**LINKAGE:** 0.12 x 0.50 zinc plated steel concealed in the channel frame

**FINISH:** Mill galvanized

**BLADE SEALS:** None

**JAMB SEALS:** None

**JACKSHAFT:** 1/2" Dia. Zinc plated steel with jackshaft connector coupling

### RATINGS

| | |
|---|---|
| Fire rating: | 1-1/2 Hours |
| Installations: | Vertical/ Horizontal |
| Operation: | Parallel blade |

### OPTIONS

Sleeves: Rectangle, Round, Oval, and Specials
Optional Material: Stainless steel construction

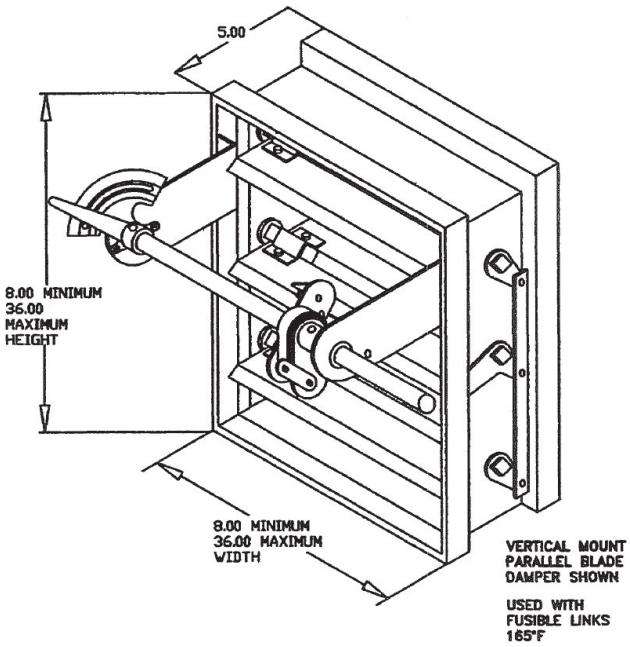


**UL CLASSIFIED**: UL 555

Model FSD-111-PB meets the requirements for fire dampers, smoke dampers and combination fire smoke dampers established by:
**CSFM California State Fire Marshal**
**Fire Damper Listing (#3225-1417:102)**
**Leakage (Smoke) Damper Listing (#3230-1417:103)**
**British Standard (BS – 476 Part 20)**
**Performance testing by AMCA International (AMCA STD 500)**
**HKFM Hong Kong fire Marshal Approval**

| Single Section | |
|---|---|
| Minimum Size (WxH) | Maximum Size (WxH) |
| 8"x8" | 36"x36" |


231 Commerce Dr. Montgomeryville, PA 18936
Tel: 215-412-4445 Fax: 215-412-4409
Email: lloydind@firedamper.com

138 Industrial Loop West, Orange Park, FL 32073
Tel: 904-541-1655 Fax: 904-541-1657
Email: lloydind1@firedamper.com

B1, 4/F., Luen Ming Hing Factory Building
36 Mok Cheong St.,
To Kwa Wan, Kowloon, H. K.
Tel: 852-2760-4188 Fax: 852-2760-4177
Email: tatanlexyim@lloydasia.com

Website: www.firedamper.com



*ALL STATED SPECIFICATIONS ARE SUBJECT TO UPDATE WITHOUT NOTICE OR OBLIGATION.





Lloyd Industries Inc. 2017

# SLEEVES MODEL 75 CURTAIN FIRE DAMPERS

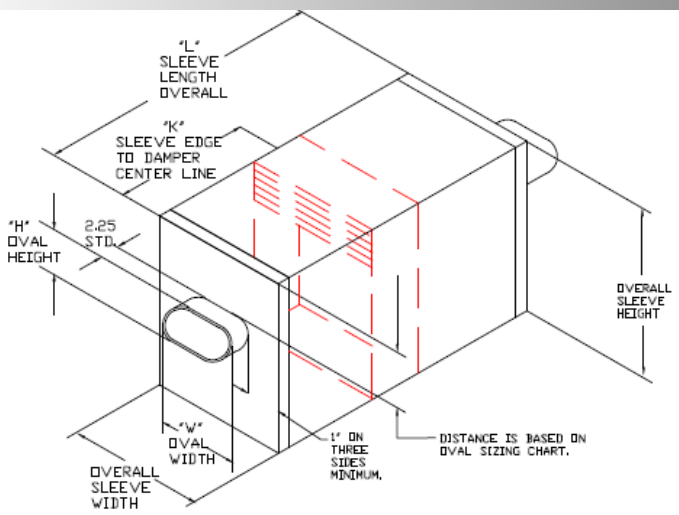


**MODEL:**
**75C RECTANGLE**
**75CR ROUND**
**75CO OVAL**

**Type "CO"**
**Oval Sleeve**

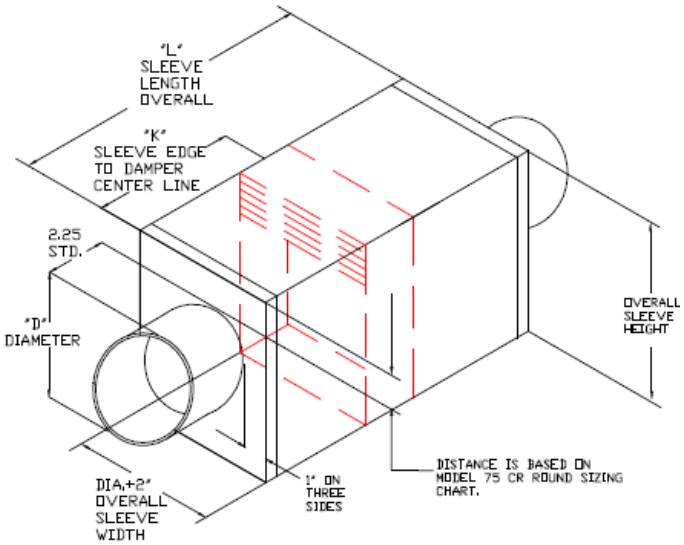


**Type "CR"**
**Round Sleeve**

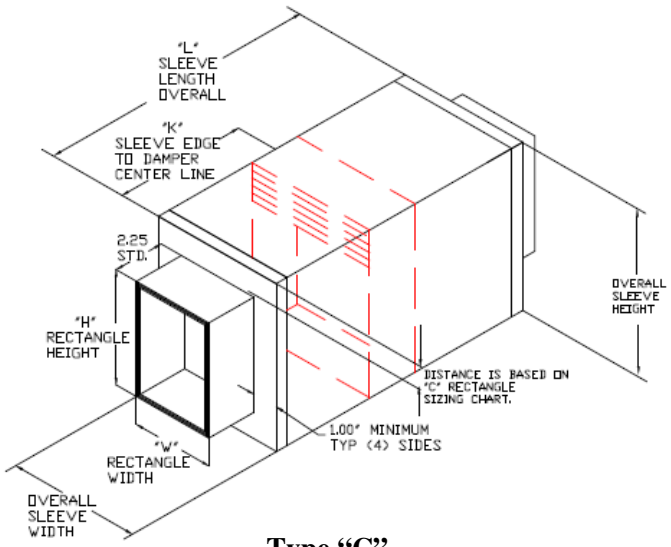


**Type "C"**
**Rectangle Sleeve**

* When ordering specify:
Rectangle x Width x Height x Length x Gauge + "K" dimension
When not specified, dampers will be provided centered in sleeve length. (L/2)

## SLEEVE DIMENSIONAL INFORMATION FOR CURTAIN FIRE DAMPERS AND DOORS

- Dampers and sleeves are always priced and ordered by W x H or dimensions as shown above. The type C, CR, and CO require the damper to be oversized. Actual overall dimensions can be determined by adding sleeve material thickness to the basic damper dimensions (after allowing for the standard 1/4" damper under sizing).

- "K" distance may be ordered at any dimension up to the sleeve length less one half the damper frame width. If "K" dimension is not specified, "K" dimension will be provided as sleeve length, L/2 ( damper on centerline).

231 Commerce Dr. Montgomeryville, PA 18936
Tel: 215-412-4445 Fax: 215-412-4409
Email: lloydind@firedamper.com

138 Industrial Loop West, Orange Park, FL 32073
Tel: 904-541-1655 Fax: 904-541-1657
Email: lloydind1@firedamper.com

B1, 4/F., Luen Ming Hing Factory Building
36 Mok Cheong St.,
To Kwa Wan, Kowloon, H. K.
Tel: 852-2760-4188 Fax: 852-2760-4177
Email: tatanlexyim@lloydasia.com

Website: www.firedamper.com

*ALL STATED SPECIFICATIONS ARE SUBJECT TO UPDATE WITHOUT NOTICE OR OBLIGATION.



Lloyd Industries Inc. 2017

# SLEEVES MODEL 75 CURTAIN FIRE DAMPERS

**MODEL:**
**75A STANDARD**
**75AF FLANGED STANDARD**
**75B STANDARD**
**75B-1 MINIMUM DUCTING**

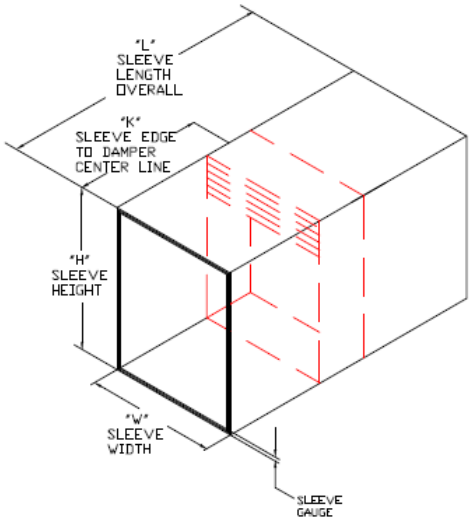


**Type "A"**
**STANDARD 75A**
**SLEEVE**

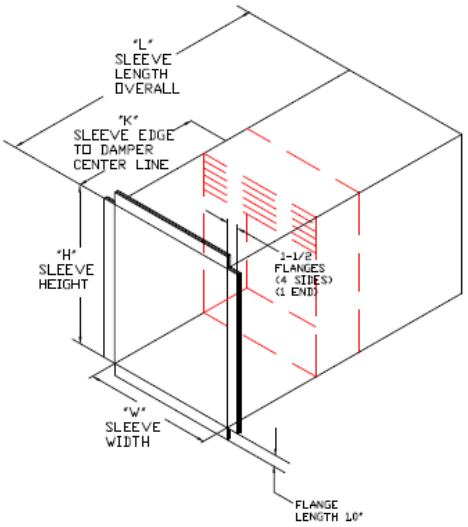


**Type "AF"**
**FLANGED STANDARD**
**75A SLEEVE**

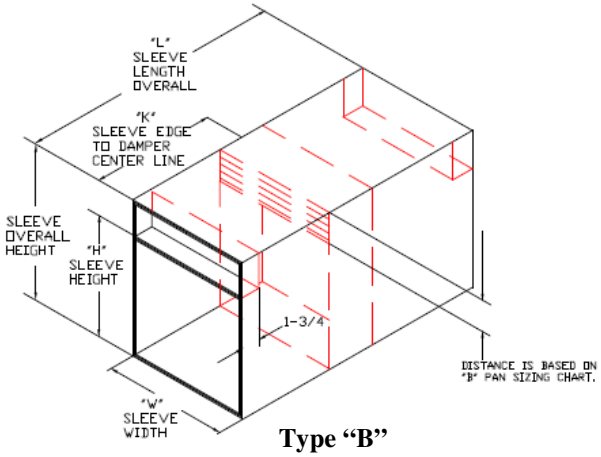


**Type "B"**
**STANDARD**
**75B SLEEVE**

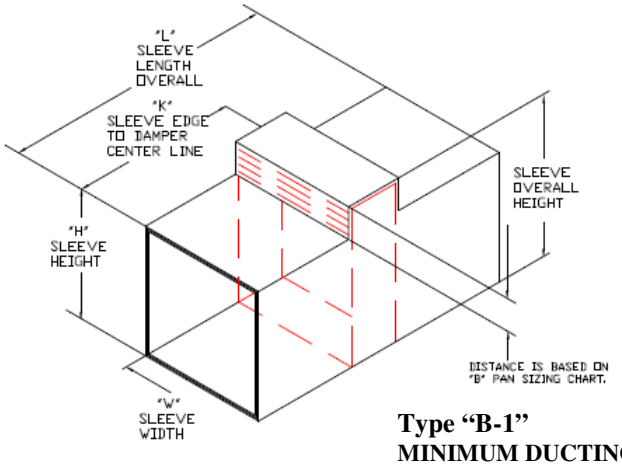


**Type "B-1"**
**MINIMUM DUCTING**
**75B SLEEVE**

* When ordering specify:
Rectangle x Width x Height x Length x Gauge + "K" dimension
When not specified, dampers will be provided centered in sleeve length. (L/2)

## SLEEVE DIMENSIONAL INFORMATION FOR CURTAIN FIRE DAMPERS AND DOORS

- Dampers and sleeves are always priced and ordered by W x H or dimensions as shown above. The type C, CR, and CO require the damper to be oversized. Actual overall dimensions can be determined by adding sleeve material thickness to the basic damper dimensions (after allowing for the standard 1/4" damper under sizing).

- "K" distance may be ordered at any dimension up to the sleeve length less one half the damper frame width. If "K" dimension is not specified, "K" dimension will be provided as sleeve length, L/2 ( damper on centerline).

231 Commerce Dr. Montgomeryville, PA 18936
Tel: 215-412-4445 Fax: 215-412-4409
Email: lloydind@firedamper.com

138 Industrial Loop West, Orange Park, FL 32073
Tel: 904-541-1655 Fax: 904-541-1657
Email: lloydind1@firedamper.com

B1, 4/F., Luen Ming Hing Factory Building
36 Mok Cheong St.,
To Kwa Wan, Kowloon, H. K.
Tel: 852-2760-4188 Fax: 852-2760-4177
Email: tatanlexyim@lloydasia.com

Website: www.firedamper.com

*ALL STATED SPECIFICATIONS ARE SUBJECT TO UPDATE WITHOUT NOTICE OR OBLIGATION.



Lloyd Industries Inc. 2017

# DAMPER ACCESSORIES

## LLOYD "RAPID MOUNTING ANGLES"

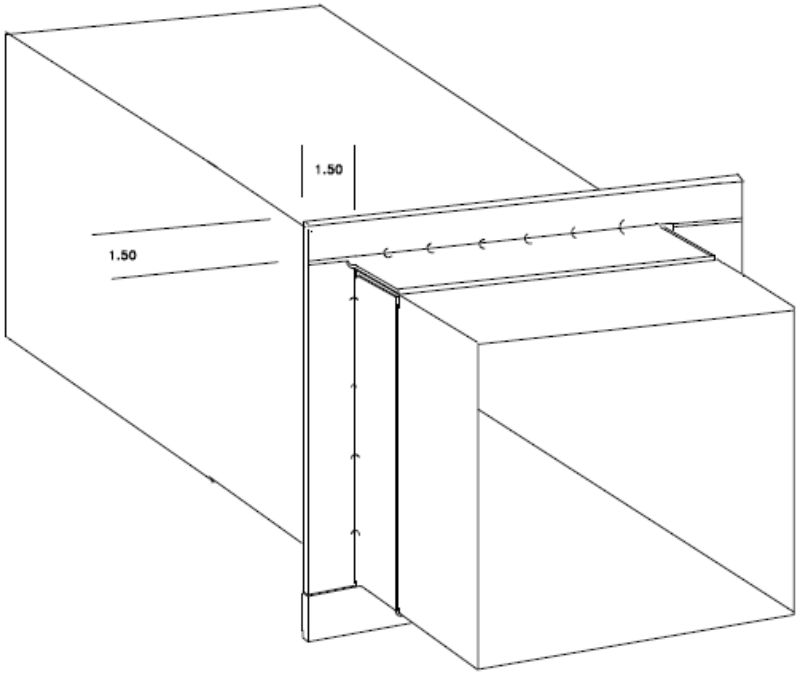


Installation has been made easier with the new Lloyd "rapid mounting angle" for single sided retaining angle installation.

For openings in metal stud, and concrete/masonry walls and floor.

* Lloyd rapid mounting angle as mounted in the field. The rapid angle wraps around the sleeve complete installation from one side. Meets requirements of UL555 and 555S.

## CLOSURE INDICATION SWITCH FOR CURTAIN FIRE DAMPERS

Mounting bracket, micro-switch, and probe

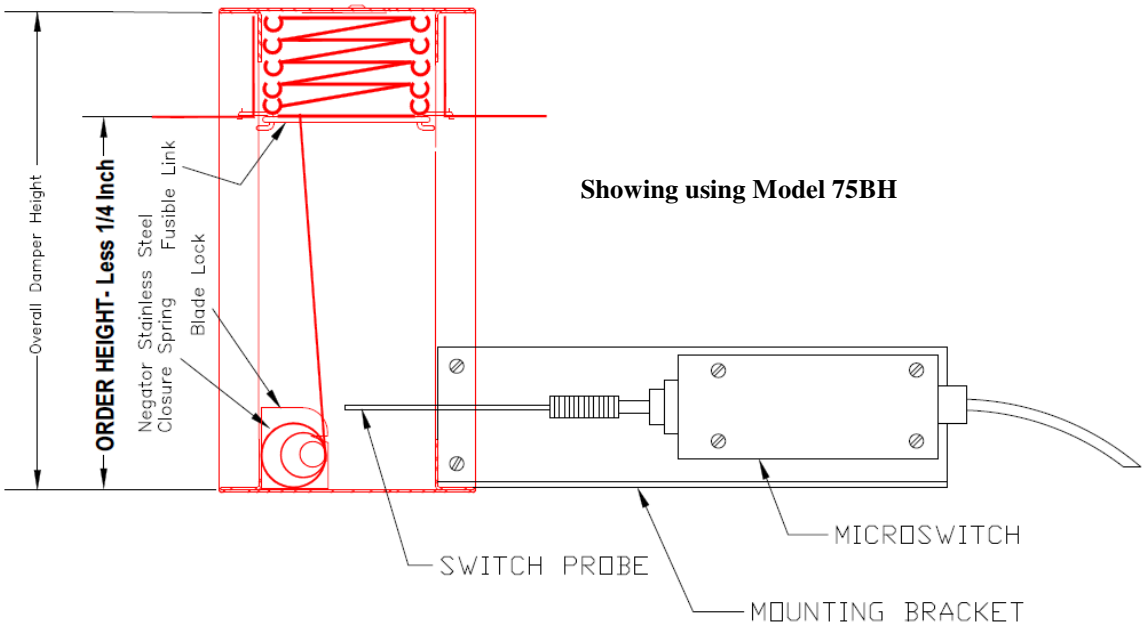


**Showing using Model 75BH**

231 Commerce Dr. Montgomeryville, PA 18936
Tel: 215-412-4445 Fax: 215-412-4409
Email: lloydind@firedamper.com

138 Industrial Loop West, Orange Park, FL 32073
Tel: 904-541-1655 Fax: 904-541-1657
Email: lloydind1@firedamper.com

B1, 4/F., Luen Ming Hing Factory Building
36 Mok Cheong St.,
To Kwa Wan, Kowloon, H. K.
Tel: 852-2760-4188 Fax: 852-2760-4177
Email: tatanlexyim@lloydasia.com

Website: www.firedamper.com

*ALL STATED SPECIFICATIONS ARE SUBJECT TO UPDATE WITHOUT NOTICE OR OBLIGATION.



Lloyd Industries Inc. 2017

# LLOYD INDUSTRIES INC.

WWW.FIREDAMPER.COM

# COMBINATION FIRE SMOKE DAMPER



**MODELS:**
**FSD-111-1-PB**

## APPLICATION

The FSD-111-1PB is a class 1 ultra low leakage, 1-1/2 combination fire & smoke damper with 3 "V" blades. The FSD-111-1PB can be installed vertically or horizontally in HVAC systems and is rated for airflow and leakage in either direction. The FSD-111-1PB has been tested with velocities up to 2000 fpm (24"x24" 4000fpm) and pressures to 4.0 in. w.g.

## STANDARD CONSTRUCTION

| | |
|---|---|
| **FRAME:** | 16 Ga. (1.5mm) galvanized steel Interlocking stacked hat section Channel frame construction |
| **BLADES :** | 16 Ga. galvanized 3 "V" formed Parallel blade |
| **BEARINGS:** | Sintered bronze, oil impregnated |
| **AXLES:** | 1/2 Sq. zinc plated steel studs |
| **LINKAGE:** | 0.12x0.50 Zinc plated steel concealed in the channel frame |
| **FINISH:** | Mill galvanized |
| **BLADE SEALS:** | 60-65 Durometer silicone rubber with laminated acrylic adhesive permanently bonded to blade edges. |
| **JAMB SEALS:** | Corrosion resistant stainless steel |
| **JACKSHAFT:** | 1/2" Dia. Zinc plated steel with jackshaft connector coupling |
| **SLEEVE:** | Rectangle, round, oval or special |
| **FUSIBLE LINK:** | 165 Degree |

## RATINGS

| | |
|---|---|
| Fire rating: | 1-1/2 Hours or FSDL 3 Hours |
| Ultra low leakage: | Class 1 |
| Installations: | Vertical/ Horizontal |
| Maximum velocity: | 2000fpm (24"x24" 4000fpm) |
| Maximum static pressure: | 4.0" W.G. |
| Temperature rating: | 250° F/350° F |
| Operation rating: | Power open/ Spring closure |

**UL CLASSIFIED**: UL 555 &UL 555S

Model FSD-111-1-PB meets the requirements for fire dampers, smoke dampers and combination fire smoke dampers established by:

**CSFM California State Fire Marshal**
**Fire Damper Listing (#3225-1417:102)**
**Leakage (Smoke) Damper Listing (#3230-1417:103)**
**British Standard (BS – 476 Part 20)**
**Performance testing by AMCA International (AMCA STD 500)**
**HKFM Hong Kong fire Marshal Approval**

## OPTIONS:

Stainless steel construction
Fusible link 212 degree
Lloydstat
**FSDL FIRE RATING 3 HOURS**

## ACTUATOR:

Specify type: electric or pneumatic
Specify brand: SIEMENS, BELIMO, HONEYWEL
Specify mounting: external or internal
Specify voltage: 24V, 120V, 220V

| Single Section | | Multiple Section |
|---|---|---|
| Minimum Size (WxH) | Maximum Size (WxH) | Maximum Size (WxH) |
| 8"x8" | 36"x36" | 72"x72" (vertical) |
| | 30"x36" | 120"x72" (vertical) |
| | 32"x36" | 96"x72" (Horizontal) |

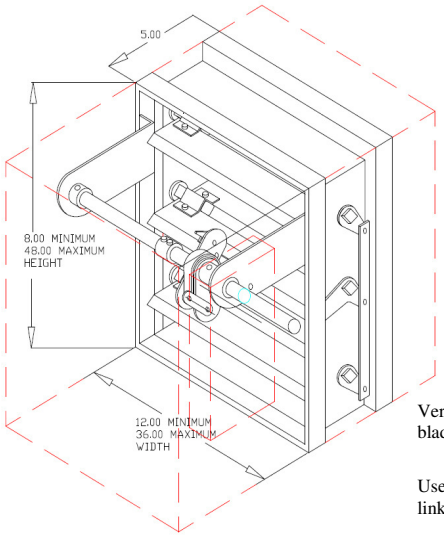


Vertical mount parallel blade damper shown

Used with fusible links 165°F

231 Commerce Dr. Montgomeryville, PA 18936
Tel: 215-412-4445 Fax: 215-412-4409
Email: lloydind@firedamper.com

138 Industrial Loop West, Orange Park, FL 32073
Tel: 904-541-1655 Fax: 904-541-1657
Email: lloydind1@firedamper.com

B1, 4/F., Luen Ming Hing Factory Building
36 Mok Cheong St.,
To Kwa Wan, Kowloon, H. K.
Tel: 852-2760-4188 Fax: 852-2760-4177
Email: tatanlexyim@lloydasia.com

Website: www.firedamper.com

*ALL STATED SPECIFICATIONS ARE SUBJECT TO UPDATE WITHOUT NOTICE OR OBLIGATION.



Lloyd Industries Inc. 2017

# LLOYD INDUSTRIES INC.

WWW.FIREDAMPER.COM

# COMBINATION FIRE SMOKE DAMPER



**MODELS:**
**FSD-111-2-PB**

## APPLICATION

The FSD-111-2PB is a class 2 low leakage, 1-1/2HR combination fire & smoke damper with 3 "V" blades. The FSD-111-2PB can be installed vertically or horizontally in HVAC systems and is rated for airflow and leakage in either direction. The FSD-111-2PB has been tested with velocities up to 2000 fpm (24"x24" 4000ffpm) and pressures to 4.0 in. w.g.

## STANDARD CONSTRUCTION

| | |
|---|---|
| **FRAME:** | 16 Ga. (1.5mm) galvanized steel Interlocking stacked hat section Channel frame construction |
| **BLADES :** | 16 Ga. galvanized 3 "V" formed parallel blade |
| **BEARINGS:** | Sintered bronze, oil impregnated |
| **AXLES:** | 1/2 Sq. zinc plated steel studs |
| **LINKAGE:** | 0.12x0.50 Zinc plated steel concealed in the channel frame |
| **FINISH:** | Mill galvanized |
| **BLADE SEALS:** | 60-65 Durometer silicone rubber with laminated acrylic adhesive permanently bonded to blade edges. |
| **JAMB SEALS:** | Corrosion resistant stainless steel |
| **JACKSHAFT:** | 1/2" Dia. zinc plated steel with jackshaft connector coupling |
| **SLEEVE:** | Rectangle, round, oval or special |
| **FUSIBLE LINK:** | 165 Degree |

## RATINGS

| | |
|---|---|
| Fire rating: | 1-1/2 Hours or FSDL 3 Hours |
| Low leakage: | Class 2 |
| Installations: | Vertical/ Horizontal |
| Maximum velocity: | 2000fpm (24"x24" 4000fpm) |
| Maximum static pressure: | 4.0" W.G. |
| Temperature rating: | 250° F/350° F |
| Operation rating: | Power open/ Spring closure |

**UL CLASSIFIED**: UL 555 &UL 555S

Model FSD-111-2-PB meets the requirements for fire dampers, smoke dampers and combination fire smoke dampers established by:

**CSFM California State Fire Marshal**
**Fire Damper Listing (#3225-1417:102)**
**Leakage (Smoke) Damper Listing (#3230-1417:103)**
**British Standard (BS – 476 Part 20)**
**Performance testing by AMCA International (AMCA STD 500)**
**HKFM Hong Kong fire Marshal Approval**

## OPTIONS:

Stainless steel construction
Fusible link 212 degree
Lloydstat
**FSDL FIRE RATING 3 HOURS**

## ACTUATOR:

Specify type: electric or pneumatic
Specify brand: SIEMENS, BELIMO, HONEYWEL
Specify mounting: external or internal
Specify voltage: 24V, 120V, 220V

| Single Section | | Multiple Section |
|---|---|---|
| Minimum Size (WxH) | Maximum Size (WxH) | Maximum Size (WxH) |
| 8"x8" | 36"x36" | 72"x72" (vertical) |
| | 30"x36" | 120"x72" (vertical) |
| | 32"x36" | 96"x72" (Horizontal) |

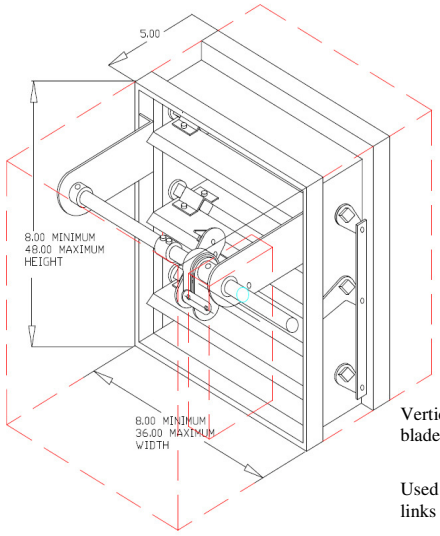


Vertical mount parallel blade damper shown

Used with fusible links 165°F

231 Commerce Dr. Montgomeryville, PA 18936
Tel: 215-412-4445 Fax: 215-412-4409
Email: lloydind@firedamper.com

138 Industrial Loop West, Orange Park, FL 32073
Tel: 904-541-1655 Fax: 904-541-1657
Email: lloydind1@firedamper.com

B1, 4/F., Luen Ming Hing Factory Building
36 Mok Cheong St.,
To Kwa Wan, Kowloon, H. K.
Tel: 852-2760-4188 Fax: 852-2760-4177
Email: tatanlexyim@lloydasia.com

Website: www.firedamper.com

*ALL STATED SPECIFICATIONS ARE SUBJECT TO UPDATE WITHOUT NOTICE OR OBLIGATION.



Lloyd Industries Inc. 2017

# LLOYD INDUSTRIES INC.

WWW.FIREDAMPER.COM

# COMBINATION FIRE SMOKE DAMPER

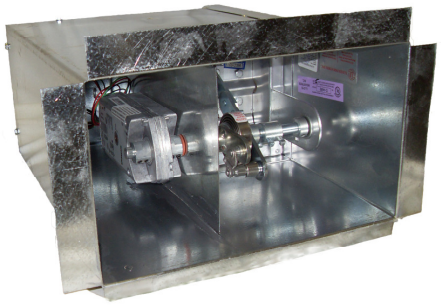

**MODELS:**
**FSD-111-1-PB**
**(FRONT ACCESS)**

## APPLICATION

The FSD-111-1PB is a class 1 leakage, 1-1/2HR rating combination fire & smoke damper with 3 "V" blades. The FSD-111-1PB can be installed vertically or horizontally in HVAC systems and is rated for airflow and leakage in either direction. The FSD-111-1PB has been tested with velocities up to 2000 fpm (24"x24" 4000fpm) and pressures to 4.0 in. w.g.

## STANDARD CONSTRUCTION

| | |
|---|---|
| **FRAME:** | 16 Ga. (1.5mm) galvanized steel Interlocking stacked hat section Channel frame construction |
| **BLADES :** | 16 Ga. galvanized 3 "V" formed Parallel blade |
| **BEARINGS:** | Sintered bronze, oil impregnated |
| **AXLES:** | 1/2 Sq. zinc plated steel studs |
| **LINKAGE:** | 0.12x0.50 Zinc plated steel concealed in the channel frame |
| **FINISH:** | Mill galvanized |
| **BLADE SEALS:** | 60-65 Durometer silicone rubber with laminated acrylic adhesive permanently bonded to blade edges. |
| **JAMB SEALS:** | Corrosion resistant stainless steel |
| **JACKSHAFT:** | 1/2" Dia. zinc plated steel with jackshaft connector coupling |
| **SLEEVE:** | Rectangle, round, oval or special |
| **FUSIBLE LINK:** | 165 Degree |

## RATINGS

| | |
|---|---|
| Fire rating: | 1-1/2 Hours or FSDL 3 Hour |
| Ultra low leakage: | Class 1 |
| Installations: | Vertical/ Horizontal |
| Maximum velocity: | 2000fpm (24"x24" 4000fpm) |
| Maximum static pressure: | 4.0" W.G. |
| Temperature rating: | 250° F/350° F |
| Operation rating: | Power open/ Spring closure |

**UL CLASSIFIED**: UL 555 &UL 555S

Model FSD-111-1-PB meets the requirements for fire dampers, smoke dampers and combination fire smoke dampers established by:

**CSFM California State Fire Marshal**
**Fire Damper Listing (#3225-1417:102)**
**Leakage (Smoke) Damper Listing (#3230-1417:103)**
**British Standard (BS – 476 Part 20)**
**Performance testing by AMCA International (AMCA STD 500)**
**HKFM Hong Kong fire Marshal Approval**

## OPTIONS:

Stainless steel construction
Fusible link 212 degree
Lloydstat
**FSDL FIRE RATING 3 HOURS**

## ACTUATOR:

Specify type: electric or pneumatic
Specify brand: SIEMENS, BELIMO, HONEYWEL
Specify mounting: external or internal
Specify voltage: 24V, 120V, 220V

| Single Section | | Multiple Section |
|---|---|---|
| Minimum Size (WxH) | Maximum Size (WxH) | Maximum Size (WxH) |
| 8"x8" | 36"x36" | 72"x72" (vertical) |
| | 30"x36" | 120"x72" (vertical) |
| | 32"x36" | 96"x72" (Horizontal) |

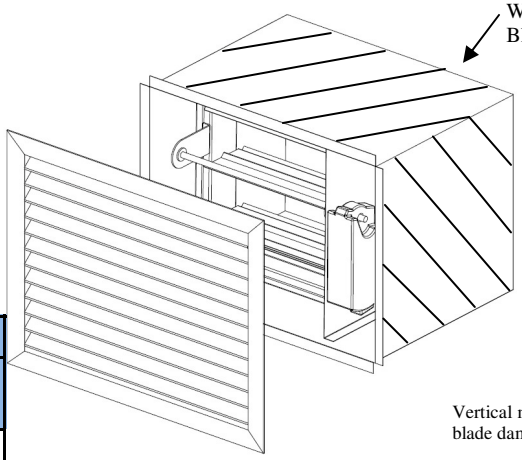


231 Commerce Dr. Montgomeryville, PA 18936
Tel: 215-412-4445 Fax: 215-412-4409
Email: lloydind@firedamper.com

138 Industrial Loop West, Orange Park, FL 32073
Tel: 904-541-1655 Fax: 904-541-1657
Email: lloydind1@firedamper.com

B1, 4/F., Luen Ming Hing Factory Building
36 Mok Cheong St.,
To Kwa Wan, Kowloon, H. K.
Tel: 852-2760-4188 Fax: 852-2760-4177
Email: tatanlexyim@lloydasia.com

Website: www.firedamper.com

*ALL STATED SPECIFICATIONS ARE SUBJECT TO UPDATE WITHOUT NOTICE OR OBLIGATION.



Lloyd Industries Inc. 2017

# COMBINATION FIRE SMOKE DAMPER

**MODELS:**
**FSD/CFSD/SD**
**FRONT ACCESS)**

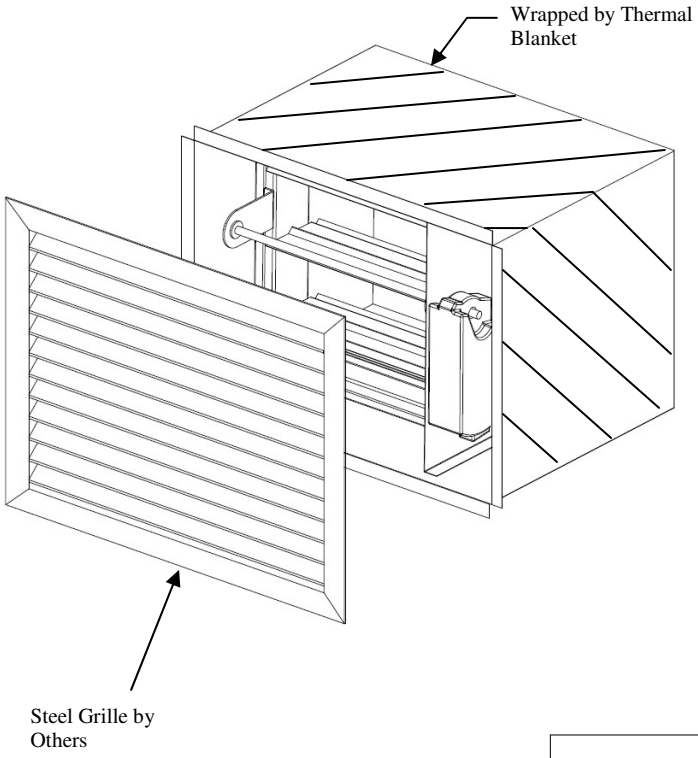


ACTUATOR CABINET
CABINET IS 6" WIDER THAN DAMPER

ORDERING INFORMATION:
Specify: "Front Access"
By Damper Size:
Ex. 18w x 18h =24w x 18h Sleeve
By Sleeve (Opening) size:
Ex. 18w x 18h =12w x 18h Damper

NOTE:
Actual Sizes are 1/4 less than Order Width and Height

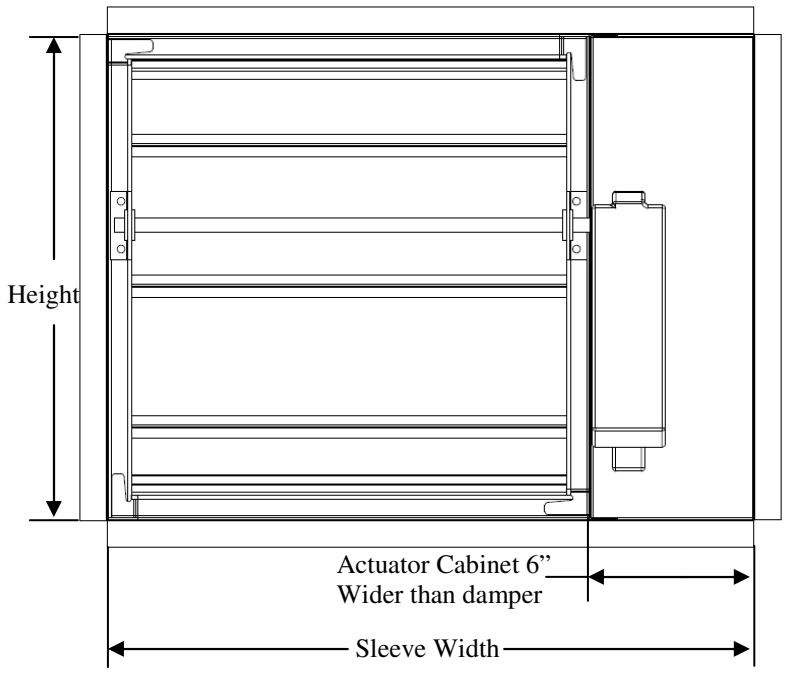


231 Commerce Dr. Montgomeryville, PA 18936
Tel: 215-412-4445 Fax: 215-412-4409
Email: lloydind@firedamper.com

138 Industrial Loop West, Orange Park, FL 32073
Tel: 904-541-1655 Fax: 904-541-1657
Email: lloydind1@firedamper.com

B1, 4/F., Luen Ming Hing Factory Building
36 Mok Cheong St.,
To Kwa Wan, Kowloon, H. K.
Tel: 852-2760-4188 Fax: 852-2760-4177
Email: tatanlexyim@lloydasia.com

Website: www.firedamper.com

*ALL STATED SPECIFICATIONS ARE SUBJECT TO UPDATE WITHOUT NOTICE OR OBLIGATION.



Lloyd Industries Inc. 2017

# LLOYD INDUSTRIES INC.

WWW.FIREDAMPER.COM

# COMBINATION FIRE SMOKE DAMPER

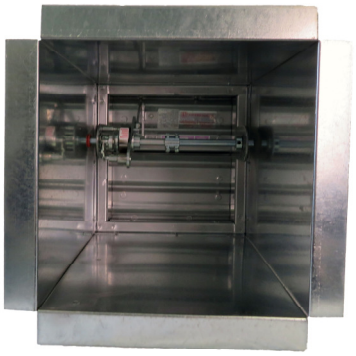

**MODELS:**
**FSD-111-1-GA-PB**
**(GRILL ACCESS)**

## APPLICATION

The FSD-111-1-GA-PB is a class 1 leakage, 1-1/2HR rating combination fire & smoke damper with 3 "V" blades. The FSD-111-1-GA-PB can be installed vertically or horizontally in HVAC systems and is rated for airflow and leakage in either direction. The FSD-111-1-GA-PB has been tested with velocities up to 2000 fpm (24"x24" 4000fpm) and pressures to 4.0 in. w.g.

## STANDARD CONSTRUCTION

| | |
|---|---|
| **FRAME:** | 16 Ga. (1.5mm) galvanized steel Interlocking stacked hat section Channel frame construction |
| **BLADES :** | 16 Ga. galvanized 3 "V" formed Parallel blade |
| **BEARINGS:** | Sintered bronze, oil impregnated |
| **AXLES:** | 1/2 Sq. zinc plated steel studs |
| **LINKAGE:** | 0.12x0.50 Zinc plated steel concealed in the channel frame |
| **FINISH:** | Mill galvanized |
| **BLADE SEALS:** | 60-65 Durometer silicone rubber with laminated acrylic adhesive permanently bonded to blade edges. |
| **JAMB SEALS:** | Corrosion resistant stainless steel |
| **JACKSHAFT:** | 1/2" Dia. zinc plated steel with jackshaft connector coupling |

## RATINGS

| | |
|---|---|
| Fire rating: | 1-1/2 Hours or FSDL 3 Hours |
| Ultra low leakage: | Class 1 |
| Installations: | Vertical/ Horizontal |
| Maximum velocity: | 2000fpm (24"x24" 4000fpm) |
| Maximum static pressure: | 4.0" W.G. |
| Temperature rating: | 250° F/350° F |
| Operation rating: | Power open/ Spring closure |

**UL CLASSIFIED**: UL 555 &UL 555S

Model FSD-111-1-PB meets the requirements for fire dampers, smoke dampers and combination fire smoke dampers established by:
**CSFM California State Fire Marshal**
**Fire Damper Listing (#3225-1417:102)**
**Leakage (Smoke) Damper Listing (#3230-1417:103)**
**British Standard (BS – 476 Part 20)**
**HKFM Hong Kong fire Marshal Approval**

## ~~OPTIONS:~~

Stainless steel construction
Fusible link 212 degree
Lloydstat
**FSDL FIRE RATING 3 HOURS**

## ACTUATOR:

Specify type: electric or pneumatic
Specify brand: SIEMENS, BELIMO, HONEYWEL
Specify mounting: external or internal
Specify voltage: 24V, 120V, 220V

| Single Section | | Multiple Section |
|---|---|---|
| Minimum Size (WxH) | Maximum Size (WxH) | Maximum Size (WxH) |
| 8"x10" | 36"x36" | 72"x72" (vertical) |
| | 30"x36" | 120"x72" (vertical) |
| | 32"x36" | 96"x72" (Horizontal) |

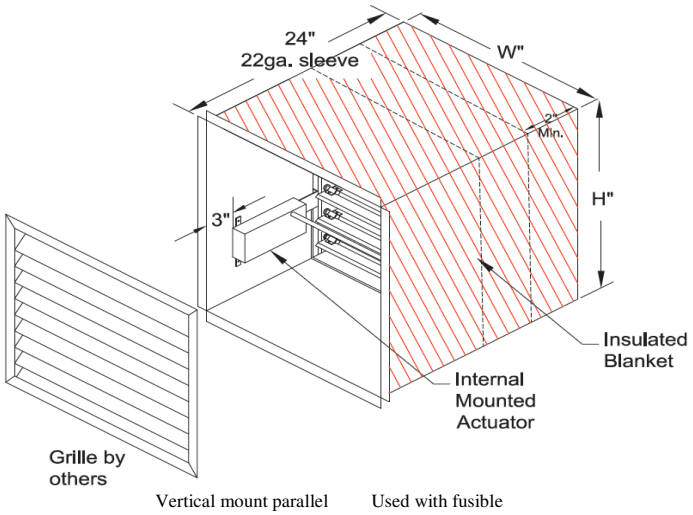


Vertical mount parallel blade damper shown

Used with fusible links 165°F


231 Commerce Dr. Montgomeryville, PA 18936
Tel: 215-412-4445 Fax: 215-412-4409
Email: lloydind@firedamper.com

138 Industrial Loop West, Orange Park, FL 32073
Tel: 904-541-1655 Fax: 904-541-1657
Email: lloydind1@firedamper.com

B1, 4/F., Luen Ming Hing Factory Building
36 Mok Cheong St.,
To Kwa Wan, Kowloon, H. K.
Tel: 852-2760-4188 Fax: 852-2760-4177
Email: tatanlexyim@lloydasia.com

Website: www.firedamper.com



*ALL STATED SPECIFICATIONS ARE SUBJECT TO UPDATE WITHOUT NOTICE OR OBLIGATION.





Lloyd Industries Inc. 2017

# COMBINATION FIRE SMOKE DAMPER

**Damper Sizing**

Dampers larger than maximum single section size are supplied as a factory assembly of two or more sections of equal size.
The following figures show maximum damper section size and assembly configurations for multi-section

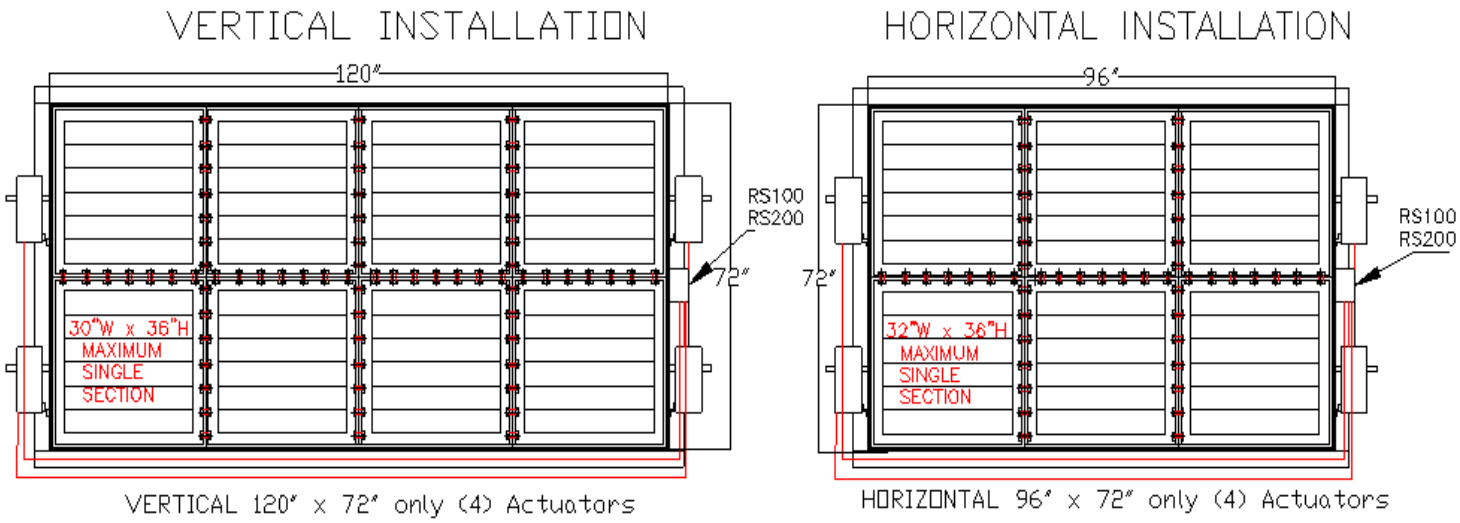


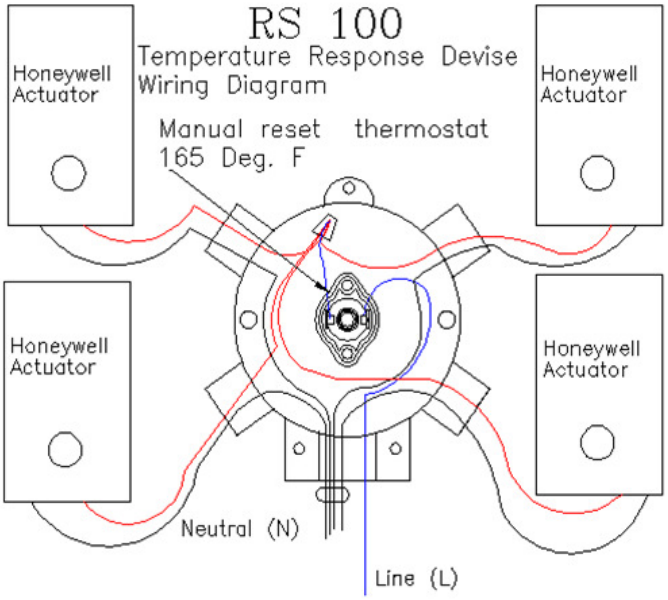


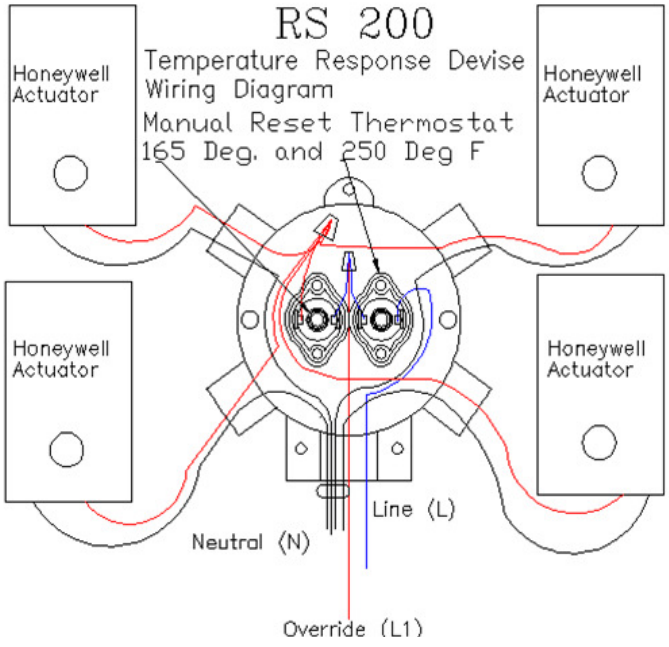


## SPECIFICATION

Combination fire/smoke dampers meeting or exceeding the following specifications shall be furnished and installed at locations shown on plans or as described in schedules. Dampers are classified as Smoke Dampers in accordance with the latest version of UL555S.
Appropriate electric actuators shall be installed by the damper manufacturer at time of damper fabrication. Electric actuators shall have been energized hold open tested for a period of at least 1 year with no spring return failures. Each damper shall be rated for leakage and airflow in either direction through the damper.



Lloyd Industries Inc. 2017

# COMBINATION FIRE SMOKE DAMPER

## MODEL RS-100

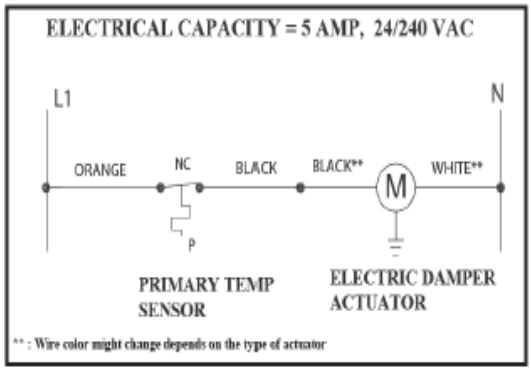


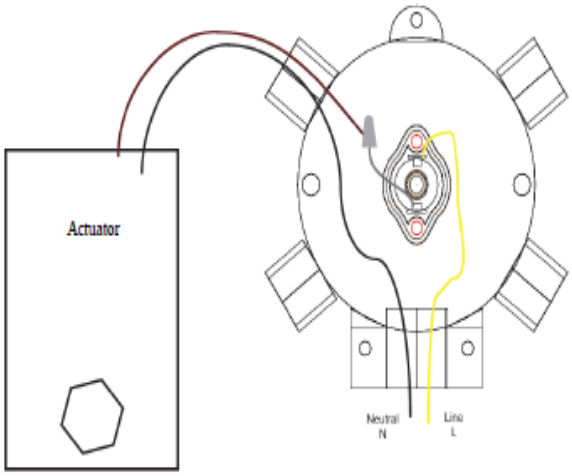


### ACTUATOR CONNECTIONS

Electrical connections between damper actuators and the Reset Switch Box shall be made through 3/8" flexible conduit in compliance with applicable codes, ordinances and regulations.

### CONNECTION AND OPERATION OF TEMPERATURE RESPONSE DEVICES RS-100

The device RS-100 is made of die cast aluminum with a minimum wall thickness of 2mm, which only incorporates one thermostat. Dampers will be supplied with a RS-100 device as a standard, and therefore the damper remains closed as soon as its sensor temperature is reached.

---

## MODEL RS-200

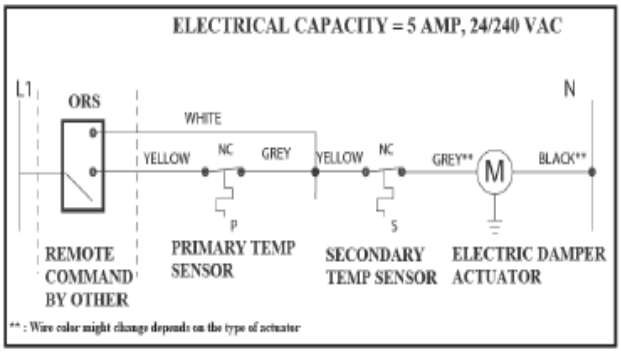


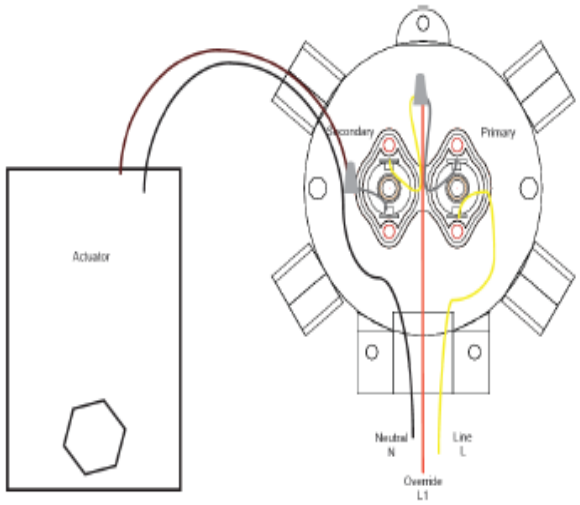


### CONNECTION AND OPERATION OF TEMPERATURE RESPONSE DEVICES RS-200 WITH OVERRIDE SWITCH (ORS)

RS-200 Dampers are made with the same construction as RS-100 but with a dual temperature-type temperature response device. The damper remains closed as soon as its primary sensor temperature is reached. The damper will remain closed until the override signal for smoke management from a remote command station is present. The duct temperature should not exceed the UL555S degradation test temperature of 250°F/350°F. Override switch to be installed in fire panel board and supplied by others.



Lloyd Industries Inc. 2017

# FSD/CFSD ALLOWABLE LEAKAGE BY CLASSIFICATION

The table 1 shows Fire smoke damper/Combination Fire Smoke damper allowable leakage by classification.

| FSD/CFSD Allowable Leakage by classification | | | | | |
|---|---|---|---|---|---|
| 1.00" Water Gauge | | | | | |
| Damper leakage classifications | Damper Leakage Allowed Maximum CFM/SQ/FT | 8"x8" SQ/FT 0.44 | 8"x36" SQ/FT 2.00 | 24"x24" SQ/FT 4.00 | 36"x36" SQ/FT 9.00 |
| Class 1 (CFM) | 4 | 1.76 | 8.00 | 16.00 | 36.00 |
| Class 2 (CFM) | 10 | 4.40 | 20.00 | 40.00 | 90.00 |
| 4.00" Water Gauge | | | | | |
| Damper leakage classifications | Damper Leakage Allowed Maximum CFM/SQ/FT | 8"x8" SQ/FT 0.44 | 8"x36" SQ/FT 2.00 | 24"x24" SQ/FT 4.00 | 36"x36" SQ/FT 9.00 |
| Class 1 (CFM) | 8 | 3.52 | 16.00 | 32.00 | 72.00 |
| Class 2 (CFM) | 20 | 8.80 | 40.00 | 80.00 | 180.00 |
| 8.00" Water Gauge | | | | | |
| Damper leakage classifications | Damper Leakage Allowed Maximum CFM/SQ/FT | 8"x8" SQ/FT 0.44 | 8"x36" SQ/FT 2.00 | 24"x24" SQ/FT 4.00 | 36"x36" SQ/FT 9.00 |
| Class 1 (CFM) | 11 | 4.84 | 22.00 | 44.00 | 99.00 |
| Class 2 (CFM) | 28 | 12.32 | 56.00 | 112.00 | 252.00 |
| 12.00" Water Gauge | | | | | |
| Damper leakage classifications | Damper Leakage Allowed Maximum CFM/SQ/FT | 8"x8" SQ/FT 0.44 | 8"x36" SQ/FT 2.00 | 24"x24" SQ/FT 4.00 | 36"x36" SQ/FT 9.00 |
| Class 1 (CFM) | 14 | 6.16 | 28.00 | 56.00 | 126.00 |
| Class 2 (CFM) | 35 | 15.40 | 70.00 | 140.00 | 315.00 |

Table 1: FSD/ CFSD Allowable Leakage by Classification

231 Commerce Dr. Montgomeryville, PA 18936
Tel: 215-412-4445 Fax: 215-412-4409
Email: lloydind@firedamper.com

138 Industrial Loop West, Orange Park, FL 32073
Tel: 904-541-1655 Fax: 904-541-1657
Email: lloydind1@firedamper.com

B1, 4/F., Luen Ming Hing Factory Building
36 Mok Cheong St.,
To Kwa Wan, Kowloon, H. K.
Tel: 852-2760-4188 Fax: 852-2760-4177
Email: tatanlexyim@lloydasia.com

Website: www.firedamper.com

*ALL STATED SPECIFICATIONS ARE SUBJECT TO UPDATE WITHOUT NOTICE OR OBLIGATION.



Lloyd Industries Inc. 2017

# FIRE SMOKE DAMPER

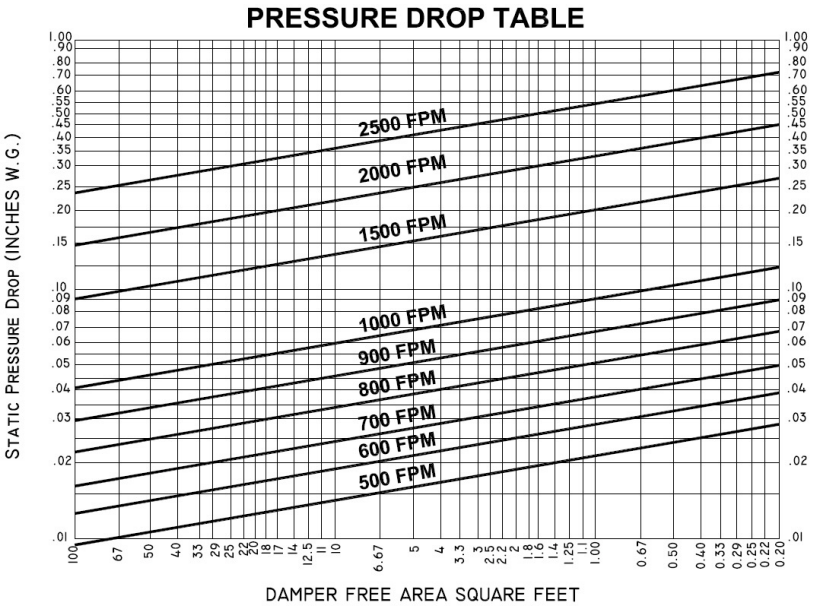


Figure 5.1

**MODELS:**
**FSD-111 Performance Data**

This pressure drop testing was conducted in accordance with AMCA Standard 500-D using the three configurations shown. All data has been corrected to represent standard air at a density of 0.07 $lb/ft^3$ ($1.2kg/m^3$).

Test Figures:
Figure 5.3 Illustrates a fully ducted damper. This configuration has the lowest pressure drop of the three test configurations because entrance and exit losses are minimized by straight duct runs upstream and downstream of the damper.

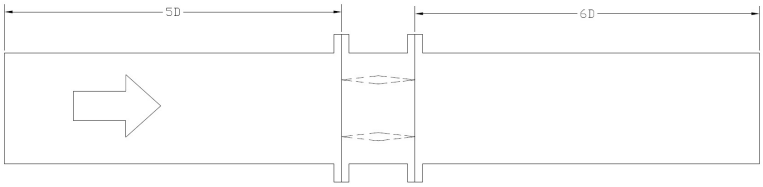


Figure 5.3

**DETERMINE DAMPER PRESSURE DROP:**
ESTABLISH THE FREE AREA:
Use the free area table (Table 5.2)
(Example: 24"W x 24"H DAMPER =2.63 SQFT )

ESTABLISH THE VELOCITY:
Use the formula:
FPM=CFM/FA
(Example: FPM=4000CFM/2.63 FA)
(=1520 FPM)

**DETERMINE THE PRESSURE DROP:**
Using the pressure drop figure (Figure 5.1):
Find the free area number (2.63) on the bottom line of the table.
Next, project a line vertically horizontally to the left or right and read the pressure drop in inches of water.
(Example: 0.19 INCHES W.G.)

**Damper Free Area**

| H \ W | 8 | 12 | 16 | 20 | 24 | 28 | 30 | 32 | 36 |
|---|---|---|---|---|---|---|---|---|---|
| **8** | 0.21 | 0.35 | 0.49 | 0.63 | 0.77 | 0.83 | 0.91 | 0.95 | 1.00 |
| **10** | 0.25 | 0.43 | 0.59 | 0.74 | 0.91 | 1.09 | 1.18 | 1.21 | 1.23 |
| **12** | 0.30 | 0.49 | 0.69 | 0.87 | 1.09 | 1.29 | 1.37 | 1.41 | 1.54 |
| **14** | 0.38 | 0.63 | 0.87 | 1.14 | 1.39 | 1.69 | 1.77 | 1.80 | 2.00 |
| **16** | 0.45 | 0.74 | 1.14 | 1.39 | 1.69 | 2.00 | 2.15 | 2.20 | 2.50 |
| **20** | 0.59 | 1.00 | 1.39 | 1.77 | 2.15 | 2.56 | 2.74 | 2.86 | 3.23 |
| **24** | 0.71 | 1.20 | 1.77 | 2.15 | 2.63 | 3.08 | 3.33 | 3.51 | 4.00 |
| **28** | 0.87 | 1.47 | 2.06 | 2.67 | 3.23 | 3.77 | 4.08 | 4.35 | 4.88 |
| **32** | 1.01 | 1.68 | 2.35 | 3.03 | 3.64 | 4.35 | 4.65 | 5.00 | 5.56 |
| **36** | 1.14 | 1.89 | 2.63 | 3.39 | 4.17 | 4.88 | 5.26 | 5.56 | 6.25 |

Table 5.2

231 Commerce Dr. Montgomeryville, PA 18936
Tel: 215-412-4445 Fax: 215-412-4409
Email: lloydind@firedamper.com

138 Industrial Loop West, Orange Park, FL 32073
Tel: 904-541-1655 Fax: 904-541-1657
Email: lloydind1@firedamper.com

B1, 4/F., Luen Ming Hing Factory Building
36 Mok Cheong St.,
To Kwa Wan, Kowloon, H. K.
Tel: 852-2760-4188 Fax: 852-2760-4177
Email: tatanlexyim@lloydasia.com

Website: www.firedamper.com

*ALL STATED SPECIFICATIONS ARE SUBJECT TO UPDATE WITHOUT NOTICE OR OBLIGATION.



Lloyd Industries Inc. 2017

# LLOYDSTAT

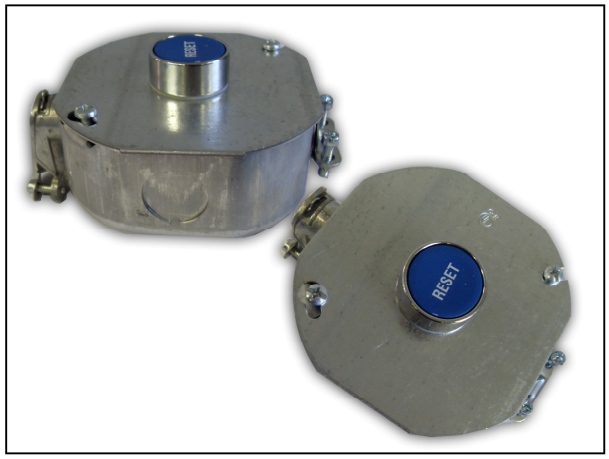


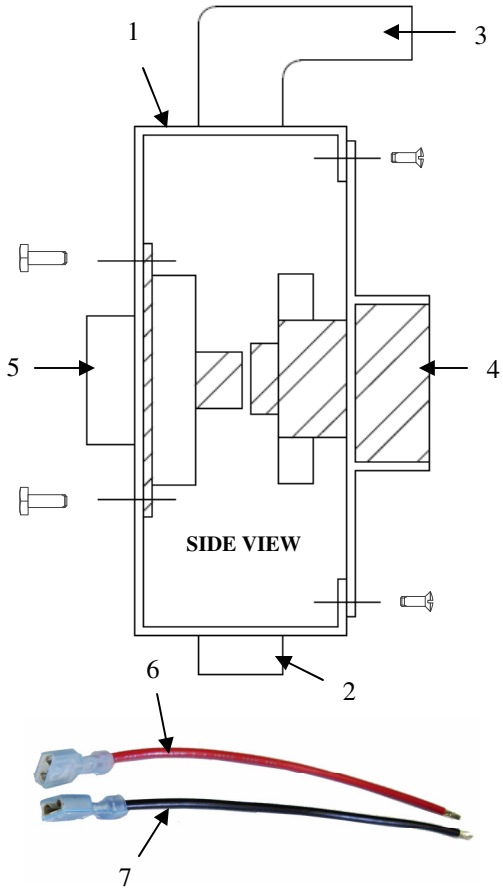


## APPLICATION

The Lloydstat is an electronic fusible link that is used in conjunction with fire/smoke dampers. When it detects temperature exceeding 165°F, the damper will close and lock. Upon cessation of fire conditions the damper can be reopened by pressing the reset button.

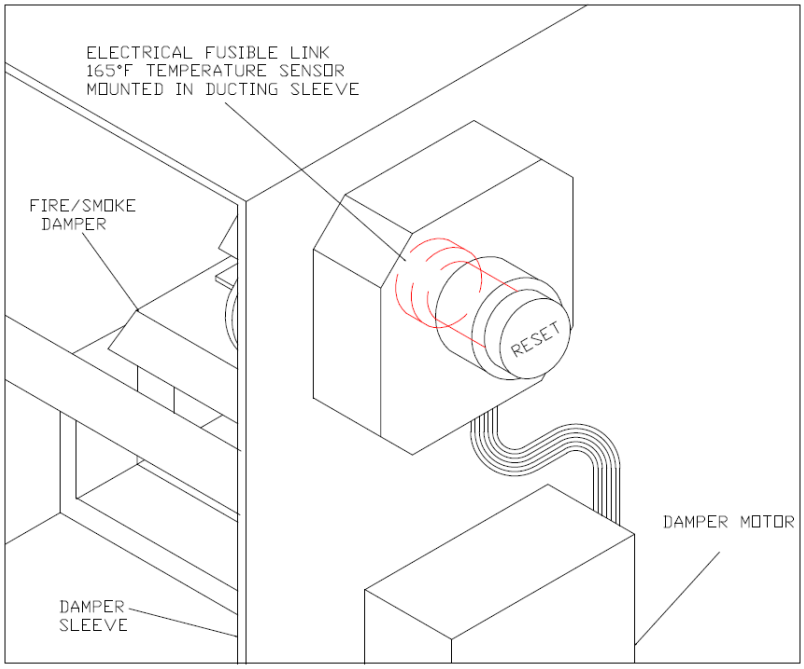


| Item | QTY | DESCRIPTION |
|---|---|---|
| 1 | 1 | OCTAGON BOX |
| 2 | 1 | STRAIGHT CONNECTOR |
| 3 | 1 | 90 DEGREE CONNECTOR |
| 4 | 1 | RESET BUTTON |
| 5 | 1 | 165 D. THERMOSTAT |
| 6 | 1 | TERMINAL CONNECTED FEMALE WIRE (RED) |
| 7 | 1 | TERMINAL CONNECTED FEMALE |

Available combination fire/smoke dampers, smoke dampers, and corridor combination fire/smoke damper assemblies with electronic fusible link installed.

Models No: FSD-111-1-PB-LS CFSD-222-1-PB-LS
FSD-111-2-PB-LS CFSD-222-2-PB-LS

231 Commerce Dr. Montgomeryville, PA 18936
Tel: 215-412-4445 Fax: 215-412-4409
Email: lloydind@firedamper.com

138 Industrial Loop West, Orange Park, FL 32073
Tel: 904-541-1655 Fax: 904-541-1657
Email: lloydind1@firedamper.com

B1, 4/F., Luen Ming Hing Factory Building
36 Mok Cheong St.,
To Kwa Wan, Kowloon, H. K.
Tel: 852-2760-4188 Fax: 852-2760-4177
Email: tatanlexyim@lloydasia.com

Website: www.firedamper.com

*ALL STATED SPECIFICATIONS ARE SUBJECT TO UPDATE WITHOUT NOTICE OR OBLIGATION.



Lloyd Industries Inc. 2017

**WIRING DIAGRAMS**

NORMAL OPERATING CONDITION

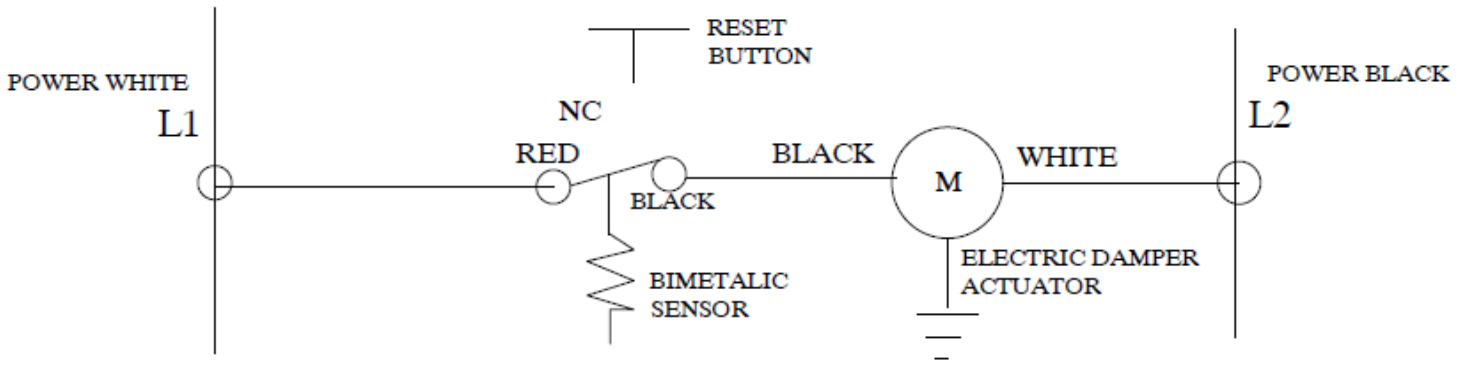


HIGH TEMPERATURE CONDITION

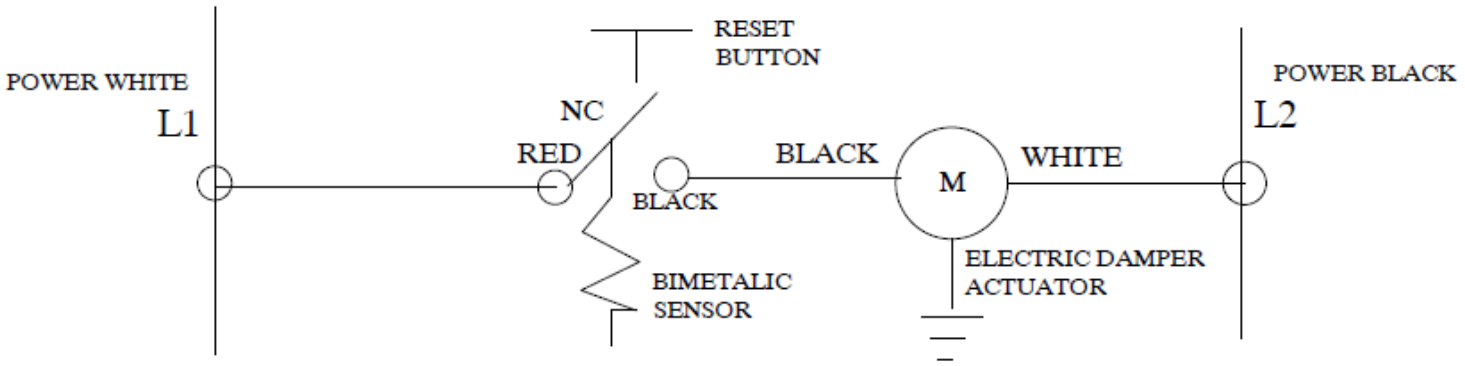


NORMAL TEMPERATURE PRE-MANUAL RESET CONDITION

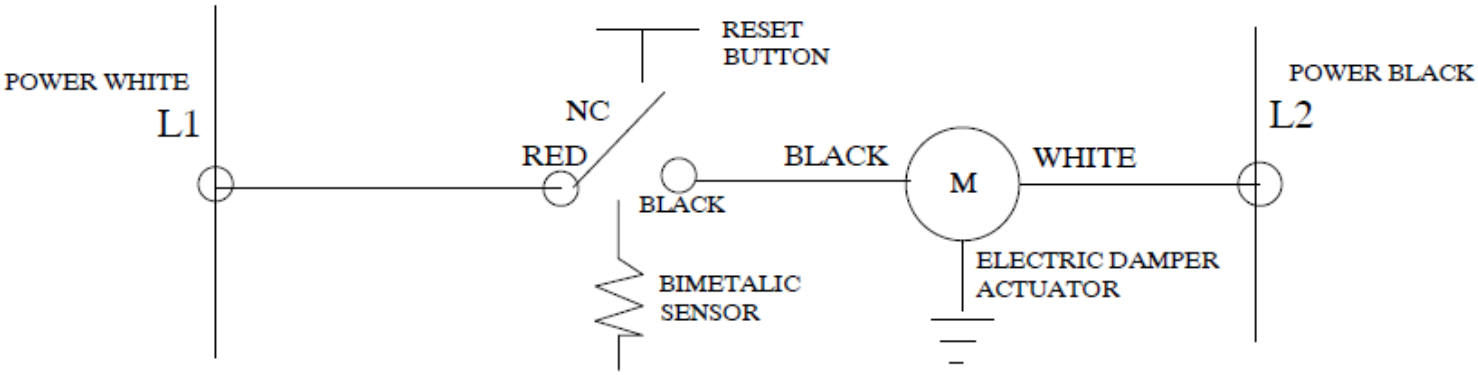


231 Commerce Dr. Montgomeryville, PA 18936
Tel: 215-412-4445 Fax: 215-412-4409
Email: lloydind@firedamper.com

138 Industrial Loop West, Orange Park, FL 32073
Tel: 904-541-1655 Fax: 904-541-1657
Email: lloydind1@firedamper.com

B1, 4/F., Luen Ming Hing Factory Building
36 Mok Cheong St.,
To Kwa Wan, Kowloon, H. K.
Tel: 852-2760-4188 Fax: 852-2760-4177
Email: tatanlexyim@lloydasia.com

Website: www.firedamper.com

*ALL STATED SPECIFICATIONS ARE SUBJECT TO UPDATE WITHOUT NOTICE OR OBLIGATION.



Lloyd Industries Inc. 2017

# SLEEVES FIRE/SMOKE DAMPERS WITH COLLARS

Model FSD-111, CFSD-222, SD-333
Standard sleeve dimensions for dampers with external or internal mounted actuators

Type CR-Round
Type CO Oval
Type C reduced rectangle

**External Mounted Actuator**

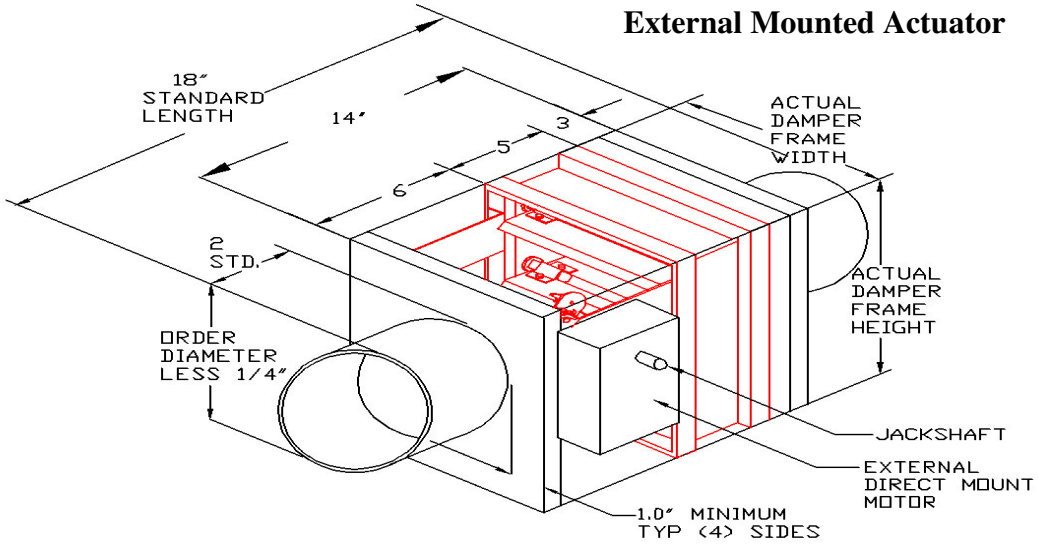


**Internal Mounted Actuator**

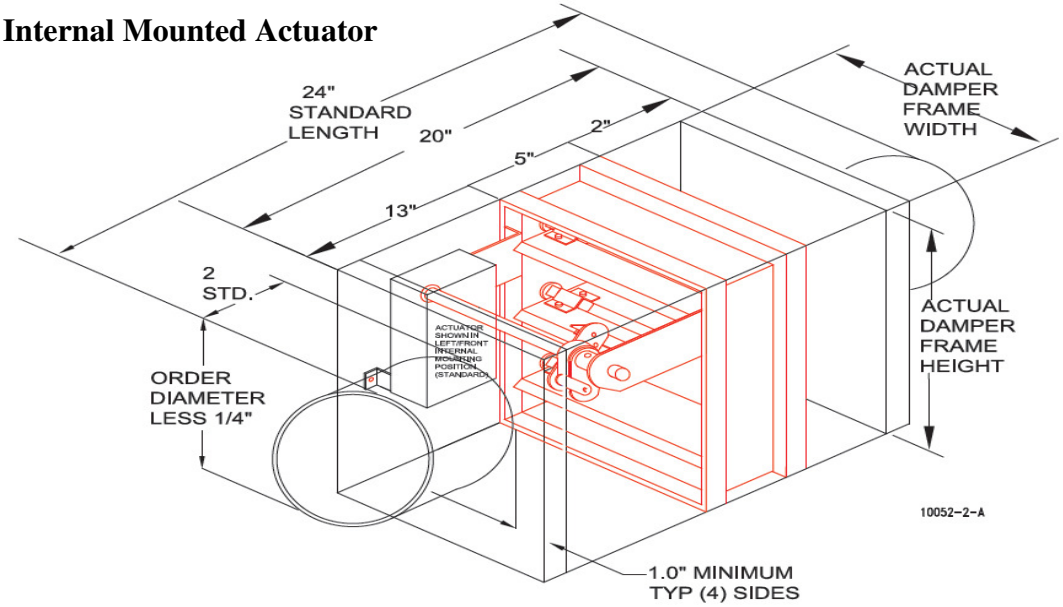


| Single section size | |
|---|---|
| | Size (Diameter) |
| Minimum | 4" |
| Maximum | 34" |

FSD-111-1CR round type shown

231 Commerce Dr. Montgomeryville, PA 18936
Tel: 215-412-4445 Fax: 215-412-4409
Email: lloydind@firedamper.com

138 Industrial Loop West, Orange Park, FL 32073
Tel: 904-541-1655 Fax: 904-541-1657
Email: lloydind1@firedamper.com

B1, 4/F., Luen Ming Hing Factory Building
36 Mok Cheong St.,
To Kwa Wan, Kowloon, H. K.
Tel: 852-2760-4188 Fax: 852-2760-4177
Email: tatanlexyim@lloydasia.com

Website: www.firedamper.com

*ALL STATED SPECIFICATIONS ARE SUBJECT TO UPDATE WITHOUT NOTICE OR OBLIGATION.



Lloyd Industries Inc. 2017

# SLEEVES FIRE/SMOKE DAMPERS

## SLEEVE TRANSITION DIMENSIONAL INFORMATION

### STANDARD SLEEVES

Fire smoke dampers and corridor fire smoke dampers will be supplied with factory mounted sleeves.
Type “A” sleeve for standard system ducting to the catalog dimensions unless otherwise specified.

Non-standard “A” sleeve ordering information

**To determine a non-standard sleeve length**

1. Establish damper width x height.
2. Determine the actuator type, model, and mounting type.
3. Establish the minimum actuator mounting distance from the mounting diagrams.
4. Determine the sleeve distance “M” opposite to the actuator side of the damper.
5. Add the actuator mounting distance to the “M” distance and the 5.00” damper thickness.
6. Integral flanges 1-1/2” wide can be provided on sleeves when specified.

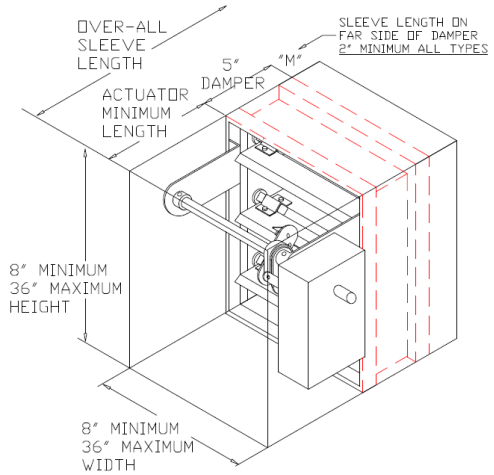


Standard sleeve
Type “A”

### SLEEVE TRANSITIONS

Fire smoke dampers and corridor fire smoke dampers can be supplied with factory mounted sleeves to transition to round, square, rectangular, oval, or special system ducting.

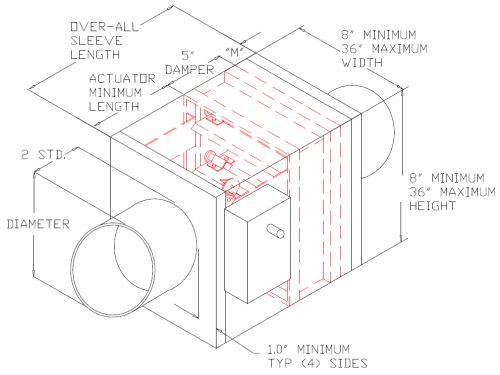


Type “CR”- Round
Specify the round ducting diameter.
( The actual damper frame will be +2.00”W x +2.00H)

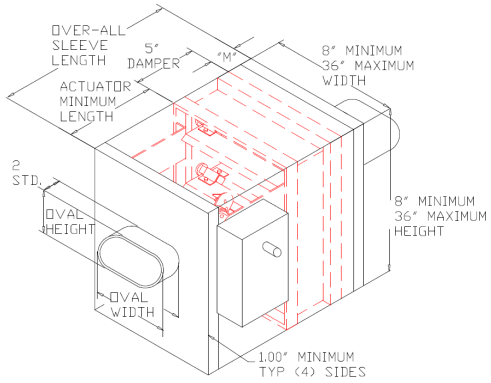


Type “CO”- Oval
Specify the oval width x oval height
( The actual damper frame will be +2.00”W x +2.00H)

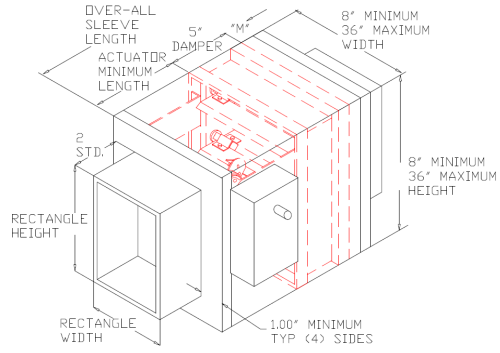


Type “C”- Rectangle
Specify the rectangle width x rectangle height
( The actual damper frame will be +2.00”W x +2.00H)

When ordering specify:
W x H x L x Gauge.
And distance “M” when “M” is not specified dampers will be centered in sleeve.

231 Commerce Dr. Montgomeryville, PA 18936
Tel: 215-412-4445 Fax: 215-412-4409
Email: lloydind@firedamper.com

138 Industrial Loop West, Orange Park, FL 32073
Tel: 904-541-1655 Fax: 904-541-1657
Email: lloydind1@firedamper.com

B1, 4/F., Luen Ming Hing Factory Building
36 Mok Cheong St.,
To Kwa Wan, Kowloon, H. K.
Tel: 852-2760-4188 Fax: 852-2760-4177
Email: tatanlexyim@lloydasia.com

Website: www.firedamper.com

*ALL STATED SPECIFICATIONS ARE SUBJECT TO UPDATE WITHOUT NOTICE OR OBLIGATION.



Lloyd Industries Inc. 2017

# ACTUATOR FOR DAMPERS

**MODELS:**
**FSD-111**
**CFSD-222**
**SD-333**

## FIGURE 1 : SELECTION SPECIFICATIONS FOR *EXTERNAL DIRECT DRIVE* ACTUATORS:

ACTUATOR MODELS:
SIEMENS: GGD121.1U, GGD221.1U, GGD321.1U
SIEMENS: GND121.1U, GND221,1U, GND321.1U
BELIMO: FSNF24, FSNF120, FSNF230
HONEYWELL: MS8109F1010, MS4109F1010, MS4609F1010, MS8120F1002, MS4620F1005, MS4120F1006

* For more actuator specification, please refer to individual spec sheet.

1. Actuator mounting locations;
   Standard is right front (Optional: Left Front)
2. Sleeve length:
   Standard is 18" shown (Optional: Specify dimension requirement above minimums)
3. Jackshaft location:
   Standard is downstream (Optional: Upstream)
4. Air flow direction:
   Normally jackshaft is downstream unless specified

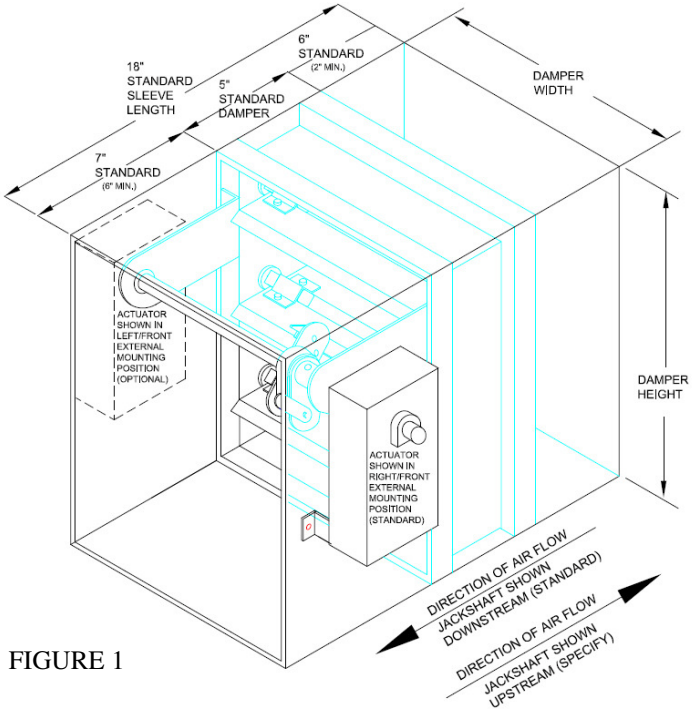


FIGURE 1

## FIGURE 2: SELECTION SPECIFICATIONS FOR *INTERNAL DIRECT DRIVE* ACTUATORS:

ACTUATOR MODELS:
SIEMENS: GGD121.1U, GGD221.1U, GGD321.1U
SIEMENS: GND121.1U, GND221,1U, GND321.1U
BELIMO: FSNF24, FSNF120, FSNF230
HONEYWELL: MS8109F1010, MS4109F1010, MS4609F1010
* For more actuator specification, please refer to individual spec sheet.

1. Actuator mounting locations:
   Standard is left front as shown
2. Sleeve length:
   Standard is 24" shown (Optional: Specify dimension requirement above minimums)
3. Jackshaft location:
   Standard is downstream (Optional: Upstream)
4. Air flow direction:
   Normally jackshaft is downstream unless specified

NOTE:
CONSULT THE FACTORY FOR MINIMUM DAMPER SIZES.

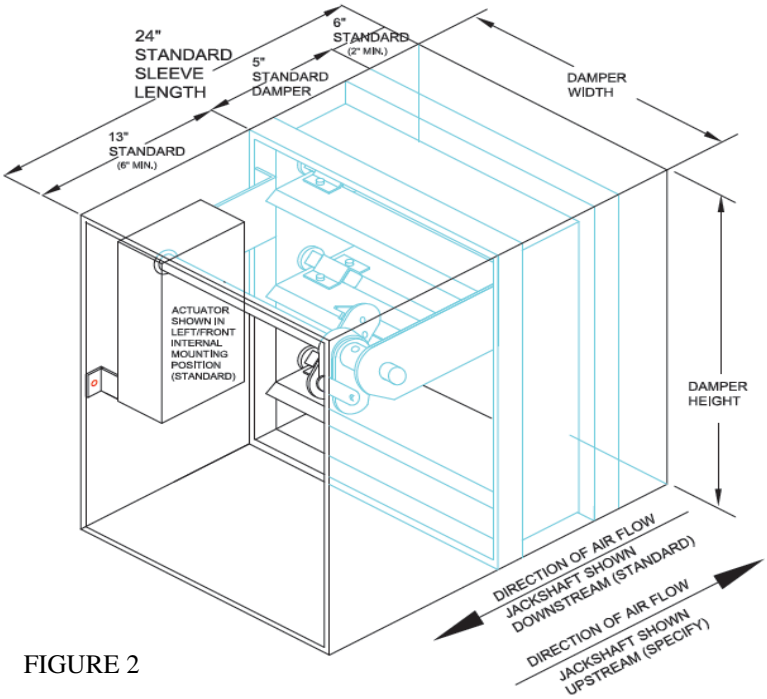


FIGURE 2

231 Commerce Dr. Montgomeryville, PA 18936
Tel: 215-412-4445 Fax: 215-412-4409
Email: lloydind@firedamper.com

138 Industrial Loop West, Orange Park, FL 32073
Tel: 904-541-1655 Fax: 904-541-1657
Email: lloydind1@firedamper.com

B1, 4/F., Luen Ming Hing Factory Building
36 Mok Cheong St.,
To Kwa Wan, Kowloon, H. K.
Tel: 852-2760-4188 Fax: 852-2760-4177
Email: tatanlexyim@lloydasia.com

Website: www.firedamper.com

*ALL STATED SPECIFICATIONS ARE SUBJECT TO UPDATE WITHOUT NOTICE OR OBLIGATION.



Lloyd Industries Inc. 2017

# ACTUATOR FOR DAMPERS

**MODELS:**
**FSD-111**
**CFSD-222**
**SD-333**

## FIGURE 3 : SELECTION SPECIFICATIONS FOR *EXTERNAL LINKAGE DRIVE* ACTUATORS:

ACTUATOR MODELS:
SIEMENS PNEUMATIC
For more actuator specification, please refer to individual spec sheet.

1. Actuator mounting location;
   Standard is right front (Optional: Left Front)
2. Sleeve length:
   Consult factory (Optional: Specify dimension requirement above minimums)
3. Jackshaft location:
   Standard is downstream (Optional: Upstream)
4. Air flow direction:
   Normally jackshaft is downstream unless specified

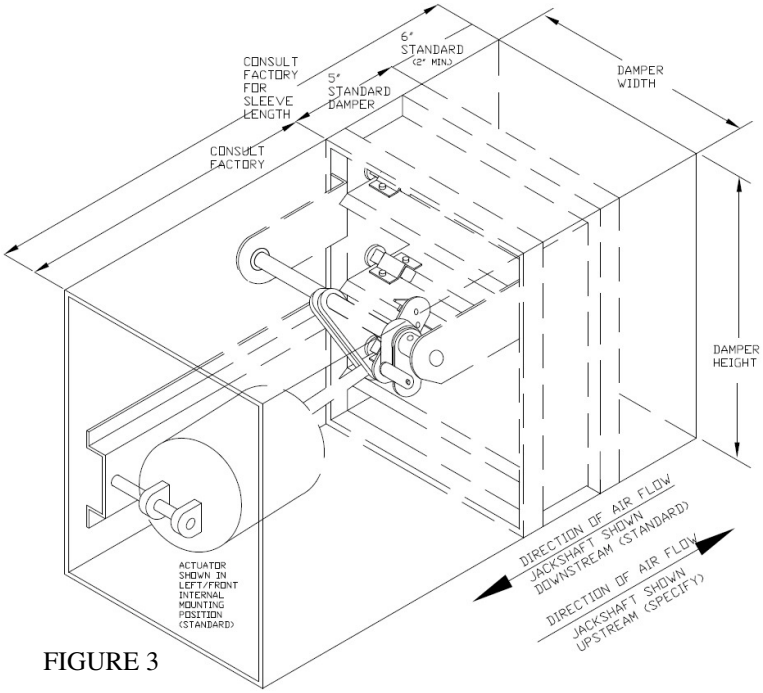


FIGURE 3

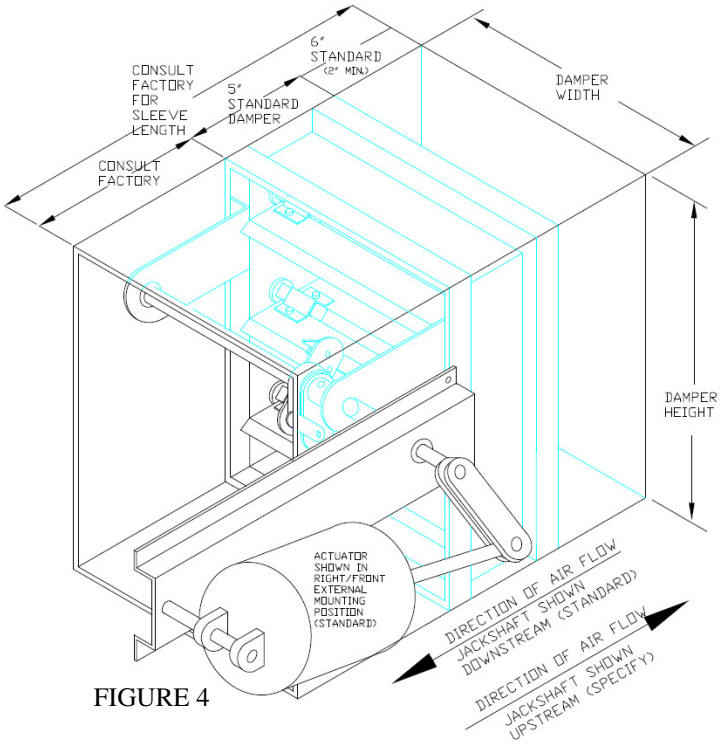


FIGURE 4

## FIGURE 4: SELECTION SPECIFICATIONS FOR *INTERNAL LINKAGE DRIVE* ACTUATORS:

ACTUATOR MODELS:
SIEMENS PNEUMATIC
* For more actuator specification, please refer to individual spec sheet.

1. Actuator mounting location;
   Standard is left front as shown
2. Sleeve length:
   Consult factory (Optional: Specify dimension requirement above minimums)
3. Jackshaft location:
   Standard is downstream (Optional: Upstream)
4. Air flow direction:
   Normally jackshaft is downstream unless specified

NOTE:
CONSULT THE FACTORY FOR MINIMUM DAMPER SIZES.

231 Commerce Dr. Montgomeryville, PA 18936
Tel: 215-412-4445 Fax: 215-412-4409
Email: lloydind@firedamper.com

138 Industrial Loop West, Orange Park, FL 32073
Tel: 904-541-1655 Fax: 904-541-1657
Email: lloydind1@firedamper.com

B1, 4/F., Luen Ming Hing Factory Building
36 Mok Cheong St.,
To Kwa Wan, Kowloon, H. K.
Tel: 852-2760-4188 Fax: 852-2760-4177
Email: tatanlexyim@lloydasia.com

Website: www.firedamper.com

*ALL STATED SPECIFICATIONS ARE SUBJECT TO UPDATE WITHOUT NOTICE OR OBLIGATION.



Lloyd Industries Inc. 2017

# LLOYD INDUSTRIES INC.

WWW.FIREDAMPER.COM

# FIRE SMOKE DAMPER WITH SMOKE DETECTOR

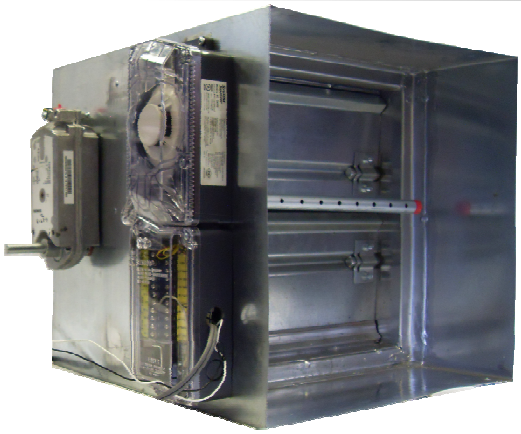

**MODELS:**
**FSD-111-1-PB-D4120**

## APPLICATION

The FSD-111-1PB-D4120 is a fire smoke damper with a smoke detector. The smoke detector is designed to detect air passing through a duct and upon alarm, provide management of fans, blowers, and combination fire smoke dampers. The detectors are available factory mounted and wired or shipped loose.

## RATINGS

| | |
|---|---|
| Fire rating: | 1-1/2 Hours or FSDL 3 Hours |
| Ultra low leakage: | Class 1 |
| Dynamic closure rating: | Actual limits are size dependent |
| Maximum velocity: | 2000fpm |
| Maximum pressure: | 4.0" W.G. |
| Temperature rating: | 250° F/350° F |

Model FSD-111-1-PB D4120 meets the requirements for fire dampers, smoke dampers and combination fire smoke dampers established by:

**CSFM California State Fire Marshal**
**Fire Damper Listing (#3225-1417:102)**
**Leakage (Smoke) Damper Listing (#3230-1417:103)**
**British Standard (BS – 476 Part 20)**
**Performance testing by AMCA International (AMCA STD 500)**
**HKFM Hong Kong fire Marshal Approval**

**UL CLASSIFIED**: UL 555 &UL 555S

## STANDARD CONSTRUCTION

| | |
|---|---|
| **FRAME:** | 5in. X 1in. Channel |
| | 16 Ga. (1.5mm) galvanized steel |
| **BLADES :** | 16 Ga. 3V |
| **BEARINGS:** | Bronze |
| **AXLES:** | 1/2 Sq. zinc plated steel studs |
| **LINKAGE:** | 0.12x0.50 Zinc plated steel |
| | concealed in the channel frame |
| **FINISH:** | Mill galvanized |
| **AIR FLOW:** | Bi-Directional |
| **JACKSHAF:** | 1/2" Dia. zinc plated steel with |
| | jackshaft connector coupling |
| **FUSIBLE LINK:** | 165 Degree |

## OPTIONS:

Stainless steel construction
Fusible link 212 degree
Lloydstat
**FSDL FIRE RATING 3 HOURS**

## ACTUATOR:

Specify type: electric or pneumatic
Specify brand: SIEMENS, BELIMO, HONEYWEL
Specify mounting: external or internal
Specify voltage: 24V, 120V, 220V

| Single Section | | Multiple Section |
|---|---|---|
| Minimum Size (WxH) | Maximum Size (WxH) | Maximum Size (WxH) |
| 8"x8" | 36"x36" | 72"x72" (vertical) |
| | 30"x36" | 120"x72" (vertical) |
| | 32"x36" | 96"x72" (Horizontal) |

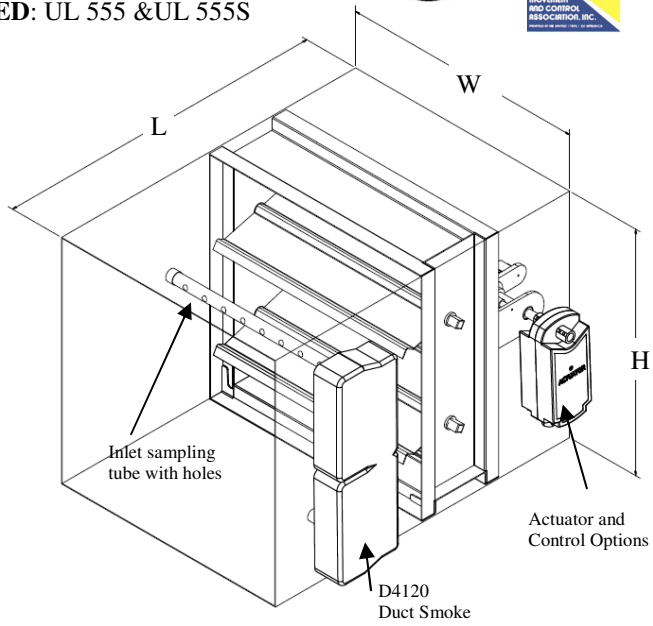


**NOTE:**
Dampers supplied 1/4" less than order width and height unless specified "ACTUAL SIZE"

231 Commerce Dr. Montgomeryville, PA 18936
Tel: 215-412-4445 Fax: 215-412-4409
Email: lloydind@firedamper.com

138 Industrial Loop West, Orange Park, FL 32073
Tel: 904-541-1655 Fax: 904-541-1657
Email: lloydind1@firedamper.com

B1, 4/F., Luen Ming Hing Factory Building
36 Mok Cheong St.,
To Kwa Wan, Kowloon, H. K.
Tel: 852-2760-4188 Fax: 852-2760-4177
Email: tatanlexyim@lloydasia.com

Website: www.firedamper.com

*ALL STATED SPECIFICATIONS ARE SUBJECT TO UPDATE WITHOUT NOTICE OR OBLIGATION.



Lloyd Industries Inc. 2017

# FIRE SMOKE DAMPER WITH SMOKE DETECTOR

**MODELS:**
**FSD/CFSD/SD**

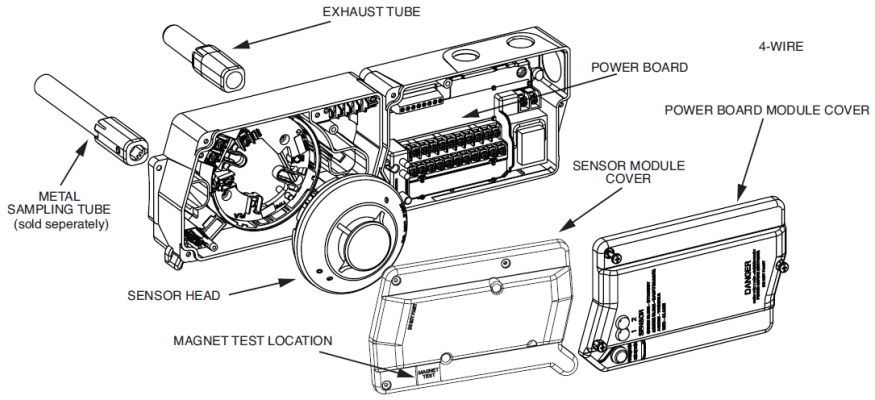


**FIGURE 1.2 DUCT SMOKE DETECTOR COMPONENTS**

## DESCRIPTION

The System Sensor D4120 detector is utilized to operate on 24V DC/AC or 120VAC. It utilizes 4-wire photoelectric technology for the detection of smoke. Alarm and supervisory relay contacts are available for control panel interface (alarm initiation), HVAC control, and other auxiliary functions. Auxiliary relays are provided for fan shut down. Detector interconnection provides signaling of up to 50 other detectors in the loop for multiple fan shut down. These detectors are not designed for 2-wire applications.

## SPECIFICATIONS

**Operating Temperature:**
D4120 : –4° to 158° F (–20° to 70° C)
**Storage Temperature:**
D4120 : –22° to 158° F (–30° to 70° C)
**Humidity:**
0% to 95% Relative Humidity Non-condensing
**Air Velocity:**
100 to 4000 ft./min. (0.5 to 20.3 m/sec.)
**D4120 Footprint Dimensions:**
Rectangular - 14.38 in L x 5 in W x 2.5 in D
(37cm L x 12.7cm W x 6.36cm D)
Square - 7.75 in L x 9 in W x 2.5 in D
(19.7cm L x 22.9cm W x 6.35cm D)
**D4120 Weight:**
2.5 pounds; 1.14 kg

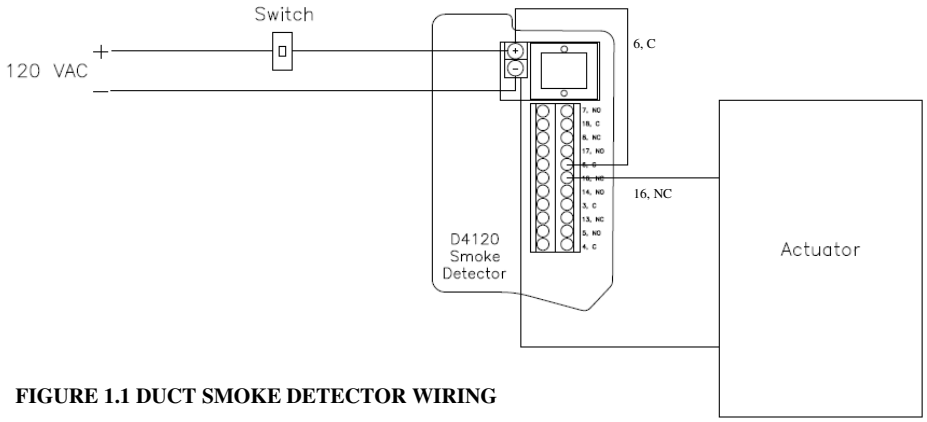


**FIGURE 1.1 DUCT SMOKE DETECTOR WIRING**

| Electrical | | | |
|---|---|---|---|
| **Power supply voltage:** | 20-29 VDC | 24 VAC 50-60-Hz | 120 VAC 50-60 Hz |
| **Input capacitance:** | 270 µF max. | 270 µF max. | N/A |
| **Reset voltage:** | 3.0 VDC min. | 2.0 VAC min. | 10 VAC min. |
| **Reset time (with RTS451/ RTS151):** | 0.03 to 0.3 sec. | 0.03 to 0.3 sec. | 0.03 to 0.3 sec. |
| **Reset time (by power down):** | 0.6 sec. max. | 0.6 sec. max. | 0.6 sec. max. |
| **Power up time:** | 35 sec. max. | 35 sec. max. | 35 sec. max. |
| **Alarm response time:** | 15 sec. | 15 sec. | 15 sec. |
| **Sensitivity test:** | See detector label | See detector label | See detector label |

| Current Requirements (Using No Accessories) | | | |
|---|---|---|---|
| **Max. standby current** | 21 mA @ 24 VDC | 65 mA RMS @ 24VAC 60 Hz | 20 mA RMS @ 120 VAC 60 Hz |
| **Max. alarm current** | 65 mA @ 24 VDC | 135 mA RMS @ 24 VAC 60 Hz | 35 mA RMS @ 120 VAC 60 Hz |

231 Commerce Dr. Montgomeryville, PA 18936
Tel: 215-412-4445 Fax: 215-412-4409
Email: lloydind@firedamper.com

138 Industrial Loop West, Orange Park, FL 32073
Tel: 904-541-1655 Fax: 904-541-1657
Email: lloydind1@firedamper.com

B1, 4/F., Luen Ming Hing Factory Building
36 Mok Cheong St.,
To Kwa Wan, Kowloon, H. K.
Tel: 852-2760-4188 Fax: 852-2760-4177
Email: tatanlexyim@lloydasia.com

Website: www.firedamper.com

*ALL STATED SPECIFICATIONS ARE SUBJECT TO UPDATE WITHOUT NOTICE OR OBLIGATION.



Lloyd Industries Inc. 2017

# LLOYD INDUSTRIES INC.

WWW.FIREDAMPER.COM

# FIRE SMOKE DAMPER WITH SMOKE DETECTOR

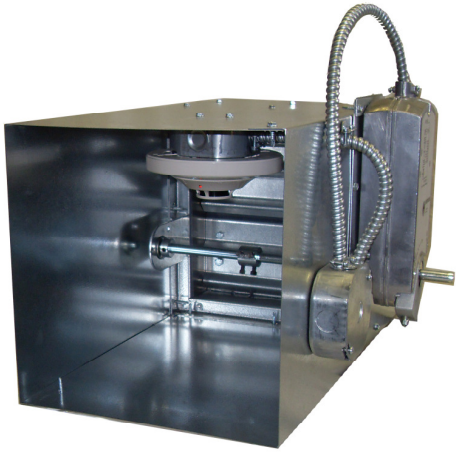

**MODELS:**
**FSD-111-1-PB-B114LP**

## APPLICATION

The FSD-111-1PB-B114LP is a fire smoke damper with a plug-in smoke detector. The smoke detector is UL 268A listed specifically for use in no-flow/low-flow air-handling systems. It's designed for installation where a standard venture principle duct smoke detector is unsuitable. This is the perfect combination for installation in ducts where the air velocity is below 500 fpm or for duct size as small as 8 inches in diameter.

## RATINGS

| | |
|---|---|
| Fire rating: | 1-1/2 Hours or FSDL 3 Hours |
| Ultra low leakage: | Class 1 |
| Dynamic closure rating: | Actual limits are size dependent |
| Maximum velocity: | 2000fpm |
| Maximum pressure: | 4.0" W.G. |

## STANDARD CONSTRUCTION

| | |
|---|---|
| **FRAME:** | 5in. X 1in. Channel<br>16 Ga. (1.5mm) galvanized steel |
| **BLADES :** | 16 Ga. 3V |
| **BEARINGS:** | Bronze |
| **AXLES:** | 1/2 Sq. zinc plated steel studs |
| **LINKAGE:** | 0.12x0.50 Zinc plated steel concealed in the channel frame |
| **FINISH:** | Mill galvanized |
| **AIR FLOW:** | Bi-Directional |
| **JACKSHAF:** | 1/2" Dia. zinc plated steel with jackshaft connector coupling |
| **FUSIBLE LINK:** | 165 Degree |

## OPTIONS:

Stainless steel construction
Fusible link 212 degree
Lloydstat
**FSDL FIRE RATING 3 HOURS**

## ACTUATOR:

Specify type: electric or pneumatic
Specify brand: SIEMENS, BELIMO, HONEYWEL
Specify mounting: external or internal
Specify voltage: 24V, 120V, 220V

Model FSD-111-1-PB-B114LP meets the requirements for fire dampers, smoke dampers and combination fire smoke dampers es-tablished by:

**CSFM California State Fire Marshal**
**Fire Damper Listing (#3225-1417:102)**
**Leakage (Smoke) Damper Listing (#3230-1417:103)**
**British Standard (BS – 476 Part 20)**
**Performance testing by AMCA International**
**HKFM Hong Kong fire Marshal Approval**

**UL CLASSIFIED**: UL 555 &UL 555S

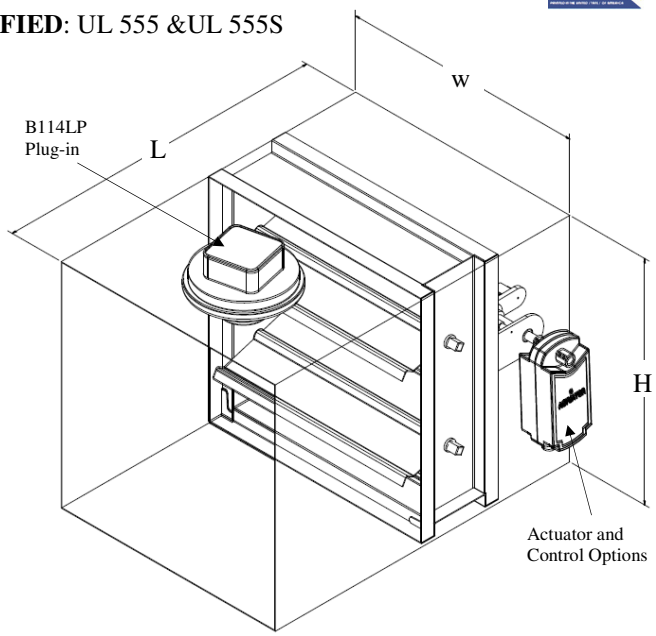


| Single Section | | Multiple Section |
|---|---|---|
| Minimum Size (WxH) | Maximum Size (WxH) | Maximum Size (WxH) |
| 8"x8" | 36"x36" | 72"x72" (vertical) |
| | 30"x36" | 120"x72" (vertical) |
| | 32"x36" | 96"x72" (Horizontal) |

**NOTE:**
Dampers supplied 1/4" less than order width and height


231 Commerce Dr. Montgomeryville, PA 18936
Tel: 215-412-4445 Fax: 215-412-4409
Email: lloydind@firedamper.com

138 Industrial Loop West, Orange Park, FL 32073
Tel: 904-541-1655 Fax: 904-541-1657
Email: lloydind1@firedamper.com

B1, 4/F., Luen Ming Hing Factory Building
36 Mok Cheong St.,
To Kwa Wan, Kowloon, H. K.
Tel: 852-2760-4188 Fax: 852-2760-4177
Email: tatanlexyim@lloydasia.com

Website: www.firedamper.com



*ALL STATED SPECIFICATIONS ARE SUBJECT TO UPDATE WITHOUT NOTICE OR OBLIGATION.





Lloyd Industries Inc. 2017

# FIRE SMOKE DAMPER WITH SMOKE DETECTOR

**MODELS:**
**FSD/CFSD/SD**

## B114LP PLUG-IN DETECTOR

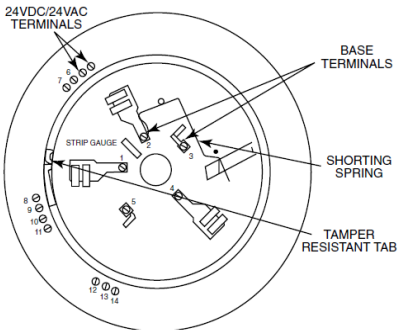


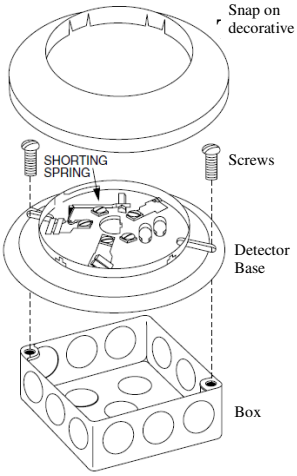


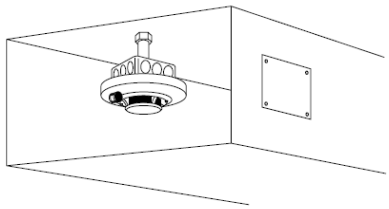
Top Mount in Ventilation Shaft

## DESCRIPTION

The model B114LP detector base is designed for use with System Sensor model 2151 photoelectronic and 1151 ionization detector heads. This four-wire base is equipped with screw terminals for the connection of power, ground, relay connections, and an optional RA400Z/RA100Z remote annunciator. It also includes a resistor that limits current when the associated smoke detector is in the alarm state.

## SMOKE DETECTOR OVERVIEW

- Low-profile smoke detector design
- Low standby current
- Two LEDs “blink” in standby
- Detector head plugs easily into base
- Built-in test switch
- Built-in tamper-resistant feature
- Field sensitivity metering of detector to meet the requirements of NFPA 72
- 120VAC and 24VAC/DC bases with built-in shorting spring
- Designed for mounting on standard electrical box
- SEMS screws for easy wiring and positive wire retention
- Removable cover and insect screen for field cleaning

## WIRING DIAGRAM

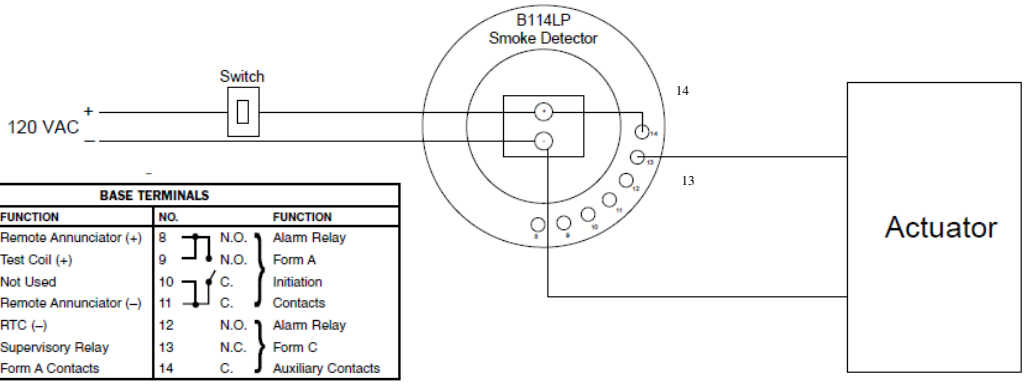


| BASE TERMINALS | | | | | |
|---|---|---|---|---|---|
| NO. | | FUNCTION | NO. | | FUNCTION |
| 1 | | Remote Annunciator (+) | 8 | N.O. | Alarm Relay |
| 2 | | Test Coil (+) | 9 | N.O. | Form A |
| 3 | | Not Used | 10 | C. | Initiation |
| 4 | | Remote Annunciator (–) | 11 | C. | Contacts |
| 5 | | RTC (–) | 12 | N.O. | Alarm Relay |
| 6 | C. | Supervisory Relay | 13 | N.C. | Form C |
| 7 | N.O. | Form A Contacts | 14 | C. | Auxiliary Contacts |

## SPECIFICATIONS

| | |
|---|---|
| Base Diameter: | 6.2 in (157 mm) |
| Base Height: | 0.95 in (24 mm) |
| Weight: | 0.6 lb (274 g) |
| Mounting: | 4″ square box with or without plaster ring, minimum depth 1.5″; 4″ octagon box, minimum depth 1.5″; 3½″ octagon box, minimum depth 1.5″; 3½″ octagon box, minimum depth 1.5″ |
| Operating Temperature Range: | 0°C to 49°C (32°F to 120°F) |
| Operating Humidity Range: | 10% to 93% Relative Humidity Non-condensing |

**Electrical Ratings (includes base and detector)**

| | |
|---|---|
| System Voltage: | 120 VAC, 60 Hz |
| Relay Contact Ratings Resistive Load: | Form A — 2.0A @ 30VAC/DC; Form C — 2.0A @ 30VAC/DC, 1.0A @ 125VAC (If used, the RA400 Remote Annunciator and RTC operates within the specified detector system voltage) |
| Start-up Time (after 60 second reset): | 36.0 seconds maximum |

231 Commerce Dr. Montgomeryville, PA 18936
Tel: 215-412-4445 Fax: 215-412-4409
Email: lloydind@firedamper.com

138 Industrial Loop West, Orange Park, FL 32073
Tel: 904-541-1655 Fax: 904-541-1657
Email: lloydind1@firedamper.com

B1, 4/F., Luen Ming Hing Factory Building
36 Mok Cheong St.,
To Kwa Wan, Kowloon, H. K.
Tel: 852-2760-4188 Fax: 852-2760-4177
Email: tatanlexyim@lloydasia.com

Website: www.firedamper.com

*ALL STATED SPECIFICATIONS ARE SUBJECT TO UPDATE WITHOUT NOTICE OR OBLIGATION.

# LLOYD INDUSTRIES INC.

WWW.FIREDAMPER.COM

# CORRIDOR COMBINATION FIRE SMOKE DAMPER





**MODELS:**
**CFSD-222-1-PB**

## APPLICATION

The CFSD-222-1-PB is a combination fire smoke damper that is UL classified. This model's operational ratings of 2,000 fpm and 4 in. w.g. far exceed the air flows and pressure differences normally encountered when installed above grilles or diffusers in corridor ceilings - providing an extra measure of safety. CFSD-222-1-PB is rated for airflow and leakage in either direction and can be used in vertical or horizontal installations.

## STANDARD CONSTRUCTION

| | |
|---|---|
| **FRAME:** | 16 Ga. (1.5mm) galvanized steel Interlocking stacked hat section Channel frame construction |
| **BLADES :** | 16 Ga. galvanized 3 "V" formed Parallel Blade |
| **BEARINGS:** | Sintered bronze, oil impregnated |
| **AXLES:** | 1/2 Sq. zinc plated steel studs |
| **LINKAGE:** | 0.12x0.50 Zinc plated steel concealed in the channel frame |
| **FINISH:** | Mill galvanized |
| **BLADE SEALS:** | 60-65 Durometer silicone rubber with laminated acrylic adhesive permanently bonded to blade edges. |
| **JAMB SEALS:** | Corrosion resistant stainless steel |
| **JACKSHAF:** | 1/2" Dia. zinc plated steel with jackshaft connector coupling |
| **SLEEVE:** | Specify: Rectangle, round, oval or special |
| **FUSIBLE LINK:** | 165 Degree |

## RATINGS

| | |
|---|---|
| Fire rating: | 1 Hour or CFSDL 3 Hours |
| Ultra low leakage: | Class 1 |
| Installations: | Vertical/ Horizontal |
| Maximum velocity: | 2000 fpm |
| Maximum static pressure: | 4.0" W.G. |
| Temperature rating: | 250° F/350° F |
| Operation rating: | Power open/ Spring closure |

**UL CLASSIFIED**: UL 555 &UL 555S

Model FSD-111-1-PB meets the requirements for fire dampers, smoke dampers and combination fire smoke dampers established by:
**CSFM California State Fire Marshal**
**Fire Damper Listing (#3225-1417:105)**
**Leakage (Smoke) Damper Listing (#3230-1417:104)**
**British Standard (BS – 476 Part 20)**
**Performance testing by AMCA International (AMCA STD 500)**
**HKFM Hong Kong fire Marshal Approval**

## OPTIONS:

Stainless steel construction
Fusible link 212 degree
Lloydstat
**FSDL FIRE RATING 3 HOURS**

## ACTUATOR:

Specify type: electric or pneumatic
Specify brand: SIEMENS, BELIMO, HONEYWEL
Specify mounting: external or internal
Specify voltage: 24V, 120V, 220V

| SINGLE SECTION SIZE AVAILABILITY | | |
|---|---|---|
| | WIDTH(INCH) | HEIGHT(INCH) |
| MINIMUM | 12 | 8 |
| MAXIMUM | 24 | 24 |

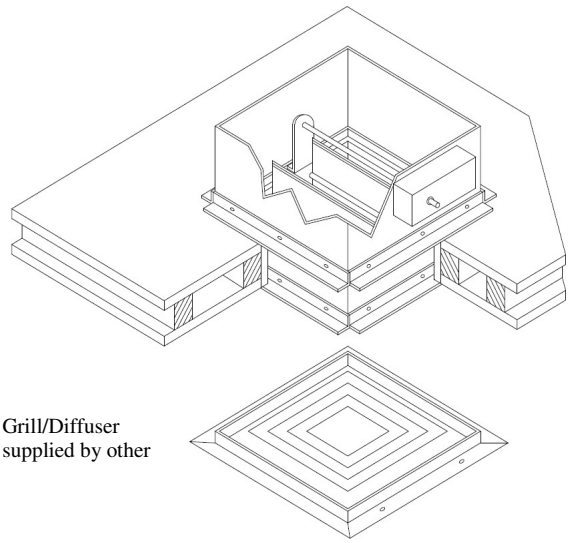

Grill/Diffuser supplied by other


231 Commerce Dr. Montgomeryville, PA 18936
Tel: 215-412-4445 Fax: 215-412-4409
Email: lloydind@firedamper.com

138 Industrial Loop West, Orange Park, FL 32073
Tel: 904-541-1655 Fax: 904-541-1657
Email: lloydind1@firedamper.com

B1, 4/F., Luen Ming Hing Factory Building
36 Mok Cheong St.,
To Kwa Wan, Kowloon, H. K.
Tel: 852-2760-4188 Fax: 852-2760-4177
Email: tatanlexyim@lloydasia.com

Website: www.firedamper.com



*ALL STATED SPECIFICATIONS ARE SUBJECT TO UPDATE WITHOUT NOTICE OR OBLIGATION.





Lloyd Industries Inc. 2017

# LLOYD INDUSTRIES INC.

WWW.FIREDAMPER.COM

# CORRIDOR COMBINATION FIRE SMOKE DAMPER





**MODELS:**
**CFSD-222-2-PB**

## APPLICATION

The CFSD-222-2-PB is a combination fire smoke damper that is UL classified. This model's operational ratings of 2,000 fpm and 4 in. w.g. far exceed the air flows and pressure differences normally encountered when installed above grilles or diffusers in corridor ceilings - providing an extra measure of safety. CFSD-222-2-PB is rated for airflow and leakage in either direction and can be used in vertical or horizontal installations.

## STANDARD CONSTRUCTION

| | |
|---|---|
| **FRAME:** | 16 Ga. (1.5mm) galvanized steel Interlocking stacked hat section Channel frame construction |
| **BLADES :** | 16 Ga. galvanized 3 "V" formed Parallel blade |
| **BEARINGS:** | Sintered bronze, oil impregnated |
| **AXLES:** | 1/2 Sq. zinc plated steel studs |
| **LINKAGE:** | 0.12x0.50 Zinc plated steel concealed in the channel frame |
| **FINISH:** | Mill galvanized |
| **BLADE SEALS:** | 60-65 Durometer silicone rubber with laminated acrylic adhesive permanently bonded to blade edges. |
| **JAMB SEALS:** | Corrosion resistant stainless steel |
| **JACKSHAF:** | 1/2" Dia. zinc plated steel with jackshaft connector coupling |
| **SLEEVE:** | Specify: rectangle, round, oval or special |
| **FUSIBLE LINK:** | 165 Degree |

## RATINGS

| | |
|---|---|
| Fire rating: | 1 Hour or CFSDL 3 Hours |
| Low leakage: | Class 2 |
| Installations: | Vertical/ Horizontal |
| Maximum velocity: | 2000fpm |
| Maximum static pressure: | 4.0" W.G. |
| Temperature rating: | 250° F/350° F |
| Operation rating: | Power open/ Spring closure |

**UL CLASSIFIED**: UL 555 &UL 555S

Model FSD-111-1-PB meets the requirements for fire dampers, smoke dampers and combination fire smoke dampers established by:
**CSFM California State Fire Marshal**
**Fire Damper Listing (#3225-1417:105)**
**Leakage (Smoke) Damper Listing (#3230-1417:104)**
**British Standard (BS – 476 Part 20)**
**Performance testing by AMCA International (AMCA STD 500)**
**HKFM Hong Kong fire Marshal Approval**

## OPTIONS:

Stainless steel construction
Fusible link 212 degree
Lloydstat
**FSDL FIRE RATING 3 HOURS**

## ACTUATOR:

Specify type: electric or pneumatic
Specify brand: SIEMENS, BELIMO, HONEYWEL
Specify mounting: external or internal
Specify voltage: 24V, 120V, 220V

| SINGLE SECTION SIZE AVAILABILITY | | |
|---|---|---|
| | WIDTH(INCH) | HEIGHT(INCH) |
| MINIMUM | 8 | 8 |
| MAXIMUM | 24 | 24 |

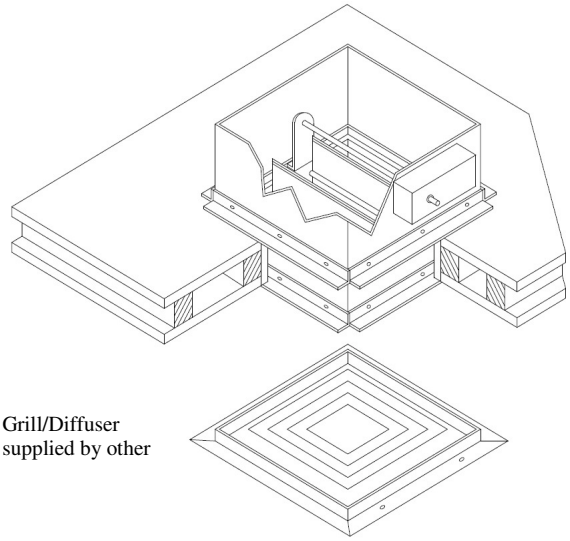

Grill/Diffuser supplied by other

231 Commerce Dr. Montgomeryville, PA 18936
Tel: 215-412-4445 Fax: 215-412-4409
Email: lloydind@firedamper.com

138 Industrial Loop West, Orange Park, FL 32073
Tel: 904-541-1655 Fax: 904-541-1657
Email: lloydind1@firedamper.com

B1, 4/F., Luen Ming Hing Factory Building
36 Mok Cheong St.,
To Kwa Wan, Kowloon, H. K.
Tel: 852-2760-4188 Fax: 852-2760-4177
Email: tatanlexyim@lloydasia.com

Website: www.firedamper.com

*ALL STATED SPECIFICATIONS ARE SUBJECT TO UPDATE WITHOUT NOTICE OR OBLIGATION.



Lloyd Industries Inc. 2017

**For Models: FSD-111-1-PB, FSD-111-2-PB, FSD-111-3-PB, FSDL-111-1-PB, CFSD-222-1-PB, CFSD-222-2-PB, CFSD-222-3-PB**

**Preferred Method:** (May require 2 people to re-install fusible link)

1. Remove all pieces of the melted or broken fusible link from the link pins located on the blade linkage inside damper.

2. Locate and loosen the shaft clamp on actuator motor where it is clamped onto linkage shaft. (The linkage shaft is a 1/2 inch solid steel round rod that passes thru the actuator motor.) The motor is usually located on the outside of the air duct, but could be internally mounted inside the duct. The shaft clamp is secured with stud (s), or set screw (s), or U-clamp with nuts, depending on the type of motor used.

3. Once the actuator shaft clamp is loose, use a set of locking pliers, (Vise-Grips or similar), and clamp them onto the linkage shaft that passes thru the actuator motor, at a point where it extends beyond the motor.

4. Rotate the linkage shaft, (it will only move in one direction), to compress the coil spring and bring the link pins closer together.

5. When the link pins are close enough, the new fusible link can be installed on the pins. Make sure the "bump" on the fusible link faces toward the motor. (A second person may be required to install the link if one person is unable to rotate the shaft and reach the link pins at the same time.)

**Alternate Method:** (Allows one person to re-install fusible link)

1. Follow steps 1 and 2 listed above.

2. Once the actuator shaft clamp is loose, use a set of locking pliers, (Vise-Grips or similar), and clamp them onto the linkage shaft **<u>ONLY IN THE AREA BETWEEN</u>** the blade linkage and the shaft coupler.

3. Follow steps 4 and 5 listed above.

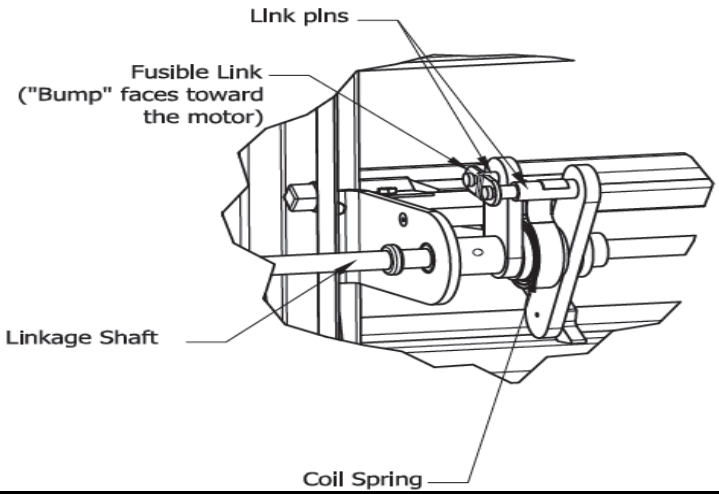


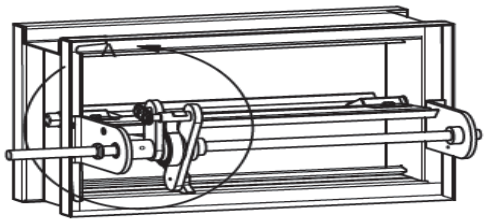

231 Commerce Dr. Montgomeryville, PA 18936
Tel: 215-412-4445 Fax: 215-412-4409
Email: lloydind@firedamper.com

138 Industrial Loop West, Orange Park, FL 32073
Tel: 904-541-1655 Fax: 904-541-1657
Email: lloydind1@bellsouth.net

B1, 4/F., Luen Ming Hing Factory Building
36 Mok Cheong St.,
To Kwa Wan, Kowloon, H. K.
Tel: 852-2760-4188 Fax: 852-2760-4177
Email: tatanlexyim@lloydasia.com

Website: www.firedamper.com

*ALL STATED SPECIFICATIONS ARE SUBJECT TO UPDATE WITHOUT NOTICE OR OBLIGATION.



Lloyd Industries Inc. 2013

# SMOKE DAMPERS



**MODELS:**
**SD-333-1-PB Ultra Low Leakage**
**(UL-555S Leakage Class 1 Classified)**

**APPLICATION**
The SD-333-1-PB is designed to control the flow of air and smoke in HVAC systems, which will shut down in the event of a fire. The movement of smoke through the building is controlled by the Smoke damper.

**OPERATIONAL RATING**

| | |
|---|---|
| Velocity: | up to 2000 fpm (24"x24" 4000fpm) |
| Pressure: | up to 4 in. w.g. |
| **INSTALLATIONS:** | Vertical and Horizontal |
| **OPERATION:** | Parallel Blade |

## STANDARD CONSTRUCTION

POWER OPEN/SPRING CLOSURE

| | |
|---|---|
| **FRAME:** | 16 Ga. galvanized steel interlocking Stacked hat section channel frame construction |
| **BLADES:** | 16 GA. galvanized 3"V" formed |
| **BEARINGS:** | Sintered bronze, oil impregnated |
| **AXLES:** | 1/2 Sq zinc plated steel studs |
| **LINKAGE:** | .12 X .50 Zinc plated steel concealed in the channel frame |
| **FINISH:** | Mill galvanized |
| **BLADE SEALS:** | 60-65 Durometer silicone rubber with laminated acrylic adhesive permanently bonded to blade edges. |
| **JAMB SEALS:** | Corrosion resistant stainless steel |
| **JACKSHAFT:** | 1/2" Dia. zinc plated steel with jackshaft connector coupling |

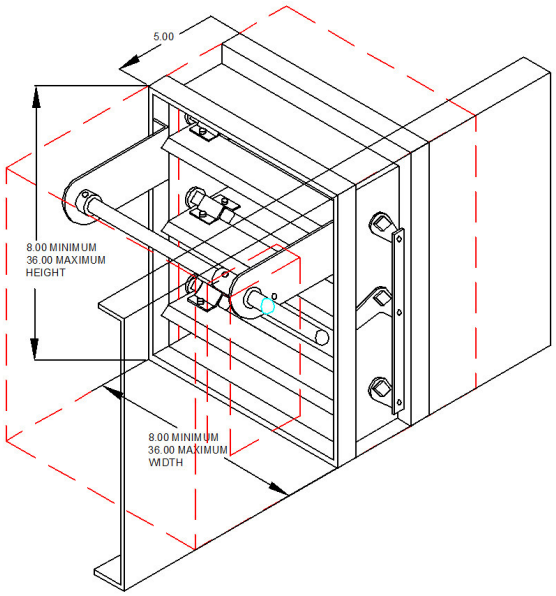


**SLEEVE OPTIONS**
- Round transition (Type CR)
- Oval transition (Type CO)
- Rectangular transition (Type C)

**OPTIONAL MATERIAL:**
Stainless steel construction

**ACTUATOR:**

| | |
|---|---|
| Specify type: | electric or pneumatic |
| Specify brand: | SIEMENS, HONEYWELL,BELIMO |
| Specify mounting: | external or internal |
| Specify voltage: | 24V, 120V, 220V |

PRODUCT LABELS OF CERTIFICATION

Listing No.
3230-1417-103

CONFORMING TO UL-555S

PERFORMANCE TESTING BY: AMCA INTERNATIONAL IN ACCORDANCE TO AMCA STD 500

ACCEPTED FOR USE CITY OF NEW YORK DEPARTMENT OF BUILDING MEA 215-99-E

| | Class 1 | Class 2 |
|---|---|---|
| Single Section | | |
| Minimum | 8"x8" | 8"x8" |
| Maximum | 36"x36" | 36"x36" |
| Multi-Section | | |
| Maximum | 144"x72" | 144"x72" |

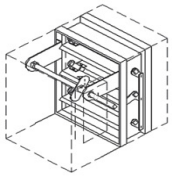
Model SD-333-1-PB

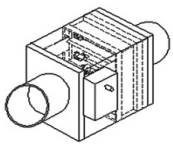
Model SD-333-1-PB (Round type "CR")

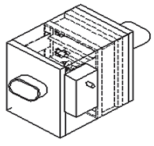
Model SD-333-1-PB (Oval type "CO")

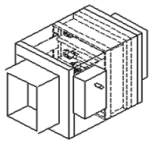
Model SD-333-1-PB (Rectangular type "C")

231 Commerce Dr. Montgomeryville, PA 18936
Tel: 215-412-4445 Fax: 215-412-4409
Email: lloydind@firedamper.com

138 Industrial Loop West, Orange Park, FL 32073
Tel: 904-541-1655 Fax: 904-541-1657
Email: lloydind1@firedamper.com

B1, 4/F., Luen Ming Hing Factory Building
36 Mok Cheong St.,
To Kwa Wan, Kowloon, H. K.
Tel: 852-2760-4188 Fax: 852-2760-4177
Email: tatanlexyim@lloydasia.com

Website: www.firedamper.com

*ALL STATED SPECIFICATIONS ARE SUBJECT TO UPDATE WITHOUT NOTICE OR OBLIGATION.



Lloyd Industries Inc. 2017

# LLOYD INDUSTRIES INC.

WWW.FIREDAMPER.COM

## SMOKE DAMPERS



**MODELS:**
**SD-333-2-PB Low Leakage**
**(UL-555S Leakage Class 2 Classified)**

**APPLICATION**

The SD-333-2-PB is designed to control the flow of air and smoke in HVAC systems, which will shut down in the event of a fire. The movement of smoke through the building is controlled by the Smoke damper.

**OPERATIONAL RATING**

| | |
|---|---|
| Velocity: | up to 2000 fpm (24"x24" 4000fpm) |
| Pressure: | up to 4 in. wg |
| INSTALLATIONS: | Vertical and Horizontal |
| OPERATION: | Parallel Blade |

**STANDARD CONSTRUCTION**

POWER OPEN/SPRING CLOSURE

| | |
|---|---|
| **FRAME:** | 16 Ga. galvanized steel interlocking Stacked hat section channel frame construction |
| **BLADES:** | 16 GA. galvanized 3"V" formed |
| **BEARINGS:** | Sintered bronze, oil impregnated |
| **AXLES:** | 1/2 Sq zinc plated steel studs |
| **LINKAGE:** | .12 X .50 Zinc plated steel concealed in the channel frame |
| **FINISH:** | Mill galvanized |
| **BLADE SEALS:** | 60-65 Durometer silicone rubber with laminated acrylic adhesive permanently bonded to blade edges. |
| **JAMB SEALS:** | Corrosion resistant stainless steel |
| **JACKSHAFT:** | 1/2" Dia. zinc plated steel with jackshaft connector coupling |

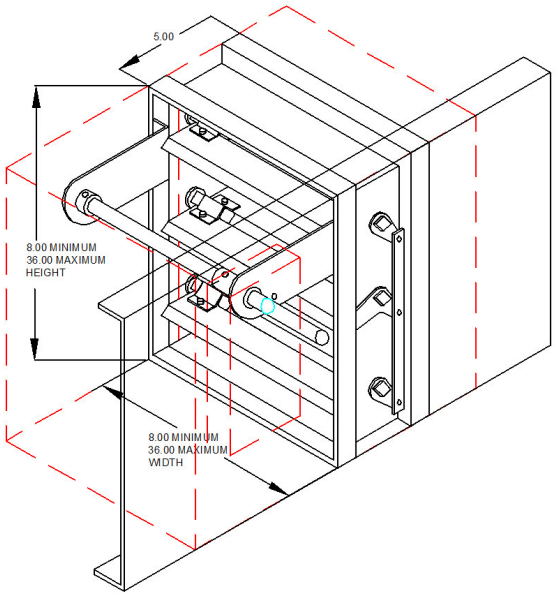


**SLEEVE OPTIONS**

- Round transition (Type CR)
- Oval transition (Type CO)
- Rectangular transition (Type C)

**OPTIONAL MATERIAL:**

Stainless steel construction

**ACTUATOR:**

| | |
|---|---|
| Specify type: | electric or pneumatic |
| Specify brand: | SIEMENS,HONEYWELL,BELIMO |
| Specify mounting: | external or internal |
| Specify voltage: | 24V, 120V, 220V |

PRODUCT LABELS OF CERTIFICATION

Listing No.
3230-1417-103

CONFORMING TO UL-555S

PERFORMANCE TESTING BY: AMCA INTERNATIONAL IN ACCORDANCE TO AMCA STD 500

ACCEPTED FOR USE CITY OF NEW YORK DEPARTMENT OF BUILDING MEA 215-99-E

| | Class 1 | Class 2 |
|---|---|---|
| Single Section | | |
| Minimum | 8"x8" | 8"x8" |
| Maximum | 36"x36" | 36"x36" |
| Multi-Section | | |
| Maximum | 144"x72" | 144"x72" |

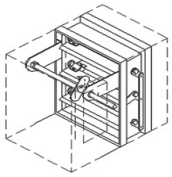

Model SD-333-1-PB

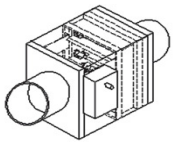

Model SD-333-1-PB (Round type "CR")

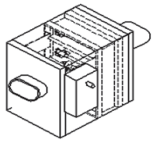

Model SD-333-1-PB (Oval type "CO")

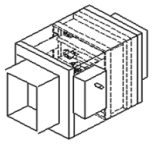

Model SD-333-1-PB (Rectangular type "C")


231 Commerce Dr. Montgomeryville, PA 18936
Tel: 215-412-4445 Fax: 215-412-4409
Email: lloydind@firedamper.com

138 Industrial Loop West, Orange Park, FL 32073
Tel: 904-541-1655 Fax: 904-541-1657
Email: lloydind1@firedamper.com

B1, 4/F., Luen Ming Hing Factory Building
36 Mok Cheong St.,
To Kwa Wan, Kowloon, H. K.
Tel: 852-2760-4188 Fax: 852-2760-4177
Email: tatanlexyim@lloydasia.com

Website: www.firedamper.com



*ALL STATED SPECIFICATIONS ARE SUBJECT TO UPDATE WITHOUT NOTICE OR OBLIGATION.





Lloyd Industries Inc. 2017

# AIR CONTROL DAMPER





**MODELS:**
**AC10 (PARALLEL BLADE)**
**AC20 (OPPOSED BLADE)**

## APPLICATION

The AC10/AC20 is a galvanized steel damper for low to medium velocity and pressure HVAC systems. A wide range of electric and pneumatic actuators are available.

| Model | Single Section | | Multiple Section |
|---|---|---|---|
| | Minimum Size (WxH) | Maximum Size (WxH) | Maximum Size (WxH) |
| AC10 | 6”X6” | 60”x60” | UNLIMITED |
| AC20 | 6”x11” | 60”x60” | |

## STANDARD CONSTRUCTION

| | |
|---|---|
| **FRAME:** | 16 Ga. (1.5mm) galvanized steel |
| | Interlocking stacked hat section |
| | (*Channel frame shown) |
| **BLADES :** | 16 Ga. galvanized V formed |
| **BEARINGS:** | Non-metallic celcon |
| **AXLES:** | 1/2 Sq zinc plated steel stud |
| **LINKAGE:** | Concealed in frame |
| | 10 Ga. zinc plated steel |
| **FINISH:** | Mill galvanized |

**STANDARD 2-1/2” EXTENDED SHAFT:**
Fixed 1/2 in dia. zinc plated steel shaft extending 2 1/2 in beyond the air control damper frame.

## OPTIONAL COMPONENTS

- Neoprene blade seals
- Stainless steel jamb seals
- Aluminum frame
- Aluminum V blades
- Bronze bearings
- Flat head & sill frame construction for max. air flow sizes 4”high to 8”high
- Stainless steel construction
- Sleeves: refer to the ACD sleeve specs
- Actuators: manual, electric, pneumatic (internal or external options available)

****OPTIONAL REMOVABLE 8” EXTENDED SHAFT:**
1/2 dia. Shaft extending 7 1/2 inches beyond the air control frame.
Requires 1” or 2” bearing bracket.

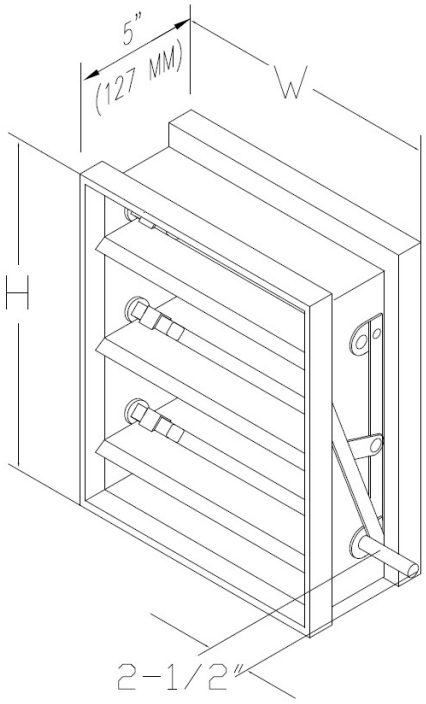


**NOTE:**
Dampers supplied 1/4” less than order width and height unless specified “ACTUAL SIZE”

231 Commerce Dr. Montgomeryville, PA 18936
Tel: 215-412-4445 Fax: 215-412-4409
Email: lloydind@firedamper.com

138 Industrial Loop West, Orange Park, FL 32073
Tel: 904-541-1655 Fax: 904-541-1657
Email: lloydind1@firedamper.com

B1, 4/F., Luen Ming Hing Factory Buildi
36 Mok Cheong St.,
To Kwa Wan, Kowloon, H. K.
Tel: 852-2760-4188 Fax: 852-2760-417
Email: tatanlexyim@lloydasia.com

Website: www.firedamper.com

*ALL STATED SPECIFICATIONS ARE SUBJECT TO UPDATE WITHOUT NOTICE OR OBLIGATION.



Lloyd Industries Inc. 2017

# LLOYD INDUSTRIES INC.

WWW.FIREDAMPER.COM

## AIR CONTROL DAMPER

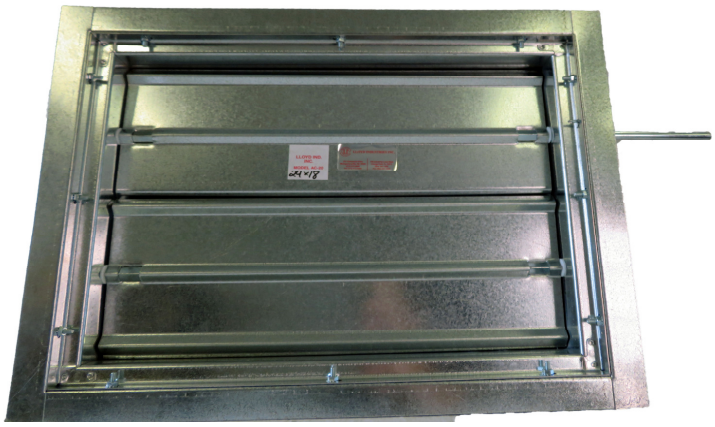

**MODELS:**
**AC10 (PARALLEL BLADE)**
**AC20 (OPPOSED BLADE)**
**DAMPER WITH FLANGED FRAME**

### APPLICATION

The AC10/AC20 is a galvanized steel damper with flanged frame for low to medium velocity and pressure HVAC systems. A wide range of electric and pneumatic actuators are available.

| Model | Single Section | | Multiple Section |
|---|---|---|---|
| | Minimum Size (WxH) | Maximum Size (WxH) | Maximum Size (WxH) |
| AC10 | 6"X6" | 60"x60" | UNLIMITED |
| AC20 | 6"x11" | 60"x60" | |

### STANDARD CONSTRUCTION

**FRAME:** 16 Ga. (1.5mm) galvanized steel
Interlocking stacked hat section
(*Channel frame shown)

**BLADES :** 16 Ga. galvanized V formed

**BEARINGS:** Non-metallic celcon

**AXLES:** 1/2 Sq zinc plated steel stud

**LINKAGE:** Concealed in frame
10 Ga. zinc plated steel

**FINISH:** Mill galvanized

**STANDARD 2-1/2" EXTENDED SHAFT:**
Fixed 1/2 in dia. zinc plated steel shaft extending 2 1/2 in beyond the air control damper frame.

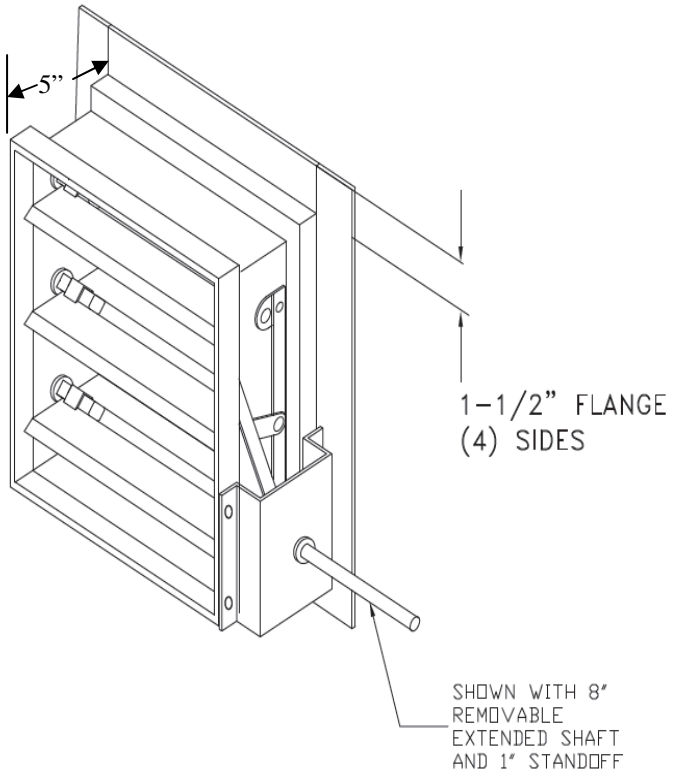


### OPTIONAL COMPONENTS

- Neoprene blade seals
- Stainless steel jamb seals
- Aluminum frame
- Aluminum V blades
- Bronze bearings
- Flat head & sill frame construction for max. air flow sizes 4"high to 8"high
- Stainless steel construction
- Sleeves: Refer to the ACD sleeve specs
- Actuators: manual, electric, pneumatic (internal or external options available)
-

**NOTE:**
Dampers supplied 1/4" less than order width and height unless specified "ACTUAL SIZE"

231 Commerce Dr. Montgomeryville, PA 18936
Tel: 215-412-4445 Fax: 215-412-4409
Email: lloydind@firedamper.com

138 Industrial Loop West, Orange Park, FL 32073
Tel: 904-541-1655 Fax: 904-541-1657
Email: lloydind1@firedamper.com

B1, 4/F., Luen Ming Hing Factory Building
36 Mok Cheong St.,
To Kwa Wan, Kowloon, H. K.
Tel: 852-2760-4188 Fax: 852-2760-4177
Email: tatanlexyim@lloydasia.com

Website: www.firedamper.com

*ALL STATED SPECIFICATIONS ARE SUBJECT TO UPDATE WITHOUT NOTICE OR OBLIGATION.



Lloyd Industries Inc. 2017

# AIR CONTROL DAMPER

**MODELS:**
**AC10 (PARALLEL BLADE)**
**AC20 (OPPOSED BLADE)**

## AMCA Certified Leakage Data

| AC10/AC20 | Leakage Class | | | |
|---|---|---|---|---|
| Damper Width | 1in.wg | 4in.wg | 6in.wg | 8in.wg |
| 48" | I | II | II | II |

Torque: 6.0 in.lb/sq.ft applied to close and seat the damper.

Lloyd Industries certifies that the AC10-AF and AC20-AF herein are licensed to bear the AMCA Seal. The ratings shown are based on the tests and procedures performed in accordance with AMCA publication 511 and comply with the requirements of the AMCA Certified Ratings Program. The AMCA International Certified Rating Seal applies to Air Performance and Air Leakage.

## AMCA Certified Pressure Drop Data

### AMCA 5.3

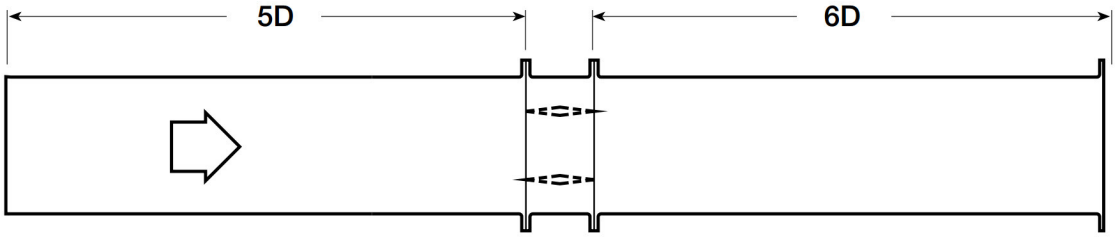


| 12"x12" | |
|---|---|
| Velocity (fpm) | Pressure Drop (in. Wg.) |
| 500 | 0.037 |
| 1000 | 0.170 |
| 1500 | 0.320 |
| 2000 | 0.700 |

| 36"x36" | |
|---|---|
| Velocity (FPM) | Pressure Drop (in. Wg.) |
| 500 | 0.004 |
| 1000 | 0.023 |
| 1500 | 0.041 |
| 2000 | 0.090 |

| 24"x24" | |
|---|---|
| Velocity (FPM) | Pressure Drop (in. Wg.) |
| 500 | 0.008 |
| 1000 | 0.040 |
| 1500 | 0.090 |
| 2000 | 0.170 |

| 12"x48" | |
|---|---|
| Velocity (fpm) | Pressure Drop (in. Wg.) |
| 500 | 0.010 |
| 1000 | 0.042 |
| 1500 | 0.080 |
| 2000 | 0.170 |

231 Commerce Dr. Montgomeryville, PA 18936
Tel: 215-412-4445 Fax: 215-412-4409
Email: lloydind@firedamper.com

138 Industrial Loop West, Orange Park, FL 32073
Tel: 904-541-1655 Fax: 904-541-1657
Email: lloydind1@firedamper.com

B1, 4/F., Luen Ming Hing Factory Building
36 Mok Cheong St.,
To Kwa Wan, Kowloon, H. K.
Tel: 852-2760-4188 Fax: 852-2760-4177
Email: tatanlexyim@lloydasia.com

Website: www.firedamper.com

*ALL STATED SPECIFICATIONS ARE SUBJECT TO UPDATE WITHOUT NOTICE OR OBLIGATION.



Lloyd Industries Inc. 2017

# ACTUATOR FOR AIR CONTROL DAMPER

**MODELS:**
**AC-10 (PARALLEL BLADE)**
**AC-20 (OPPOSED BLADE)**

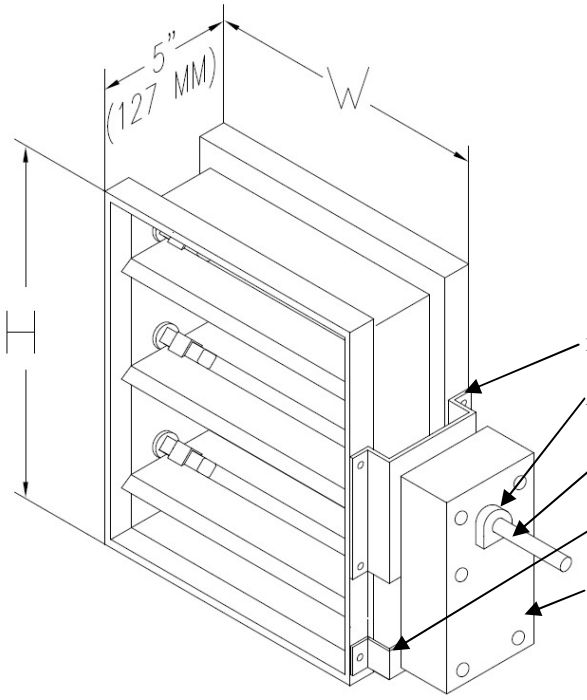


**COMPONENTS FOR DAMPER WITH EXTERNAL MOTOR:**

(1) 8" EXTENDED SHAFT
(1) BEARING BRACKET
(1) ACTUATOR ASSEMBLY PACKAGE
  (1) ACTUATOR WITH SHAFT CLAMP
  (1) ACTUATOR HANGER BRACKET
(1) DAMPER SLEEVE

(STANDARD SHEET METAL SCREWS ARE NOT PROVIDED)

**ACTUATORS:**
Manual, Electric, Pneumatic.
Belimo or Siemens.

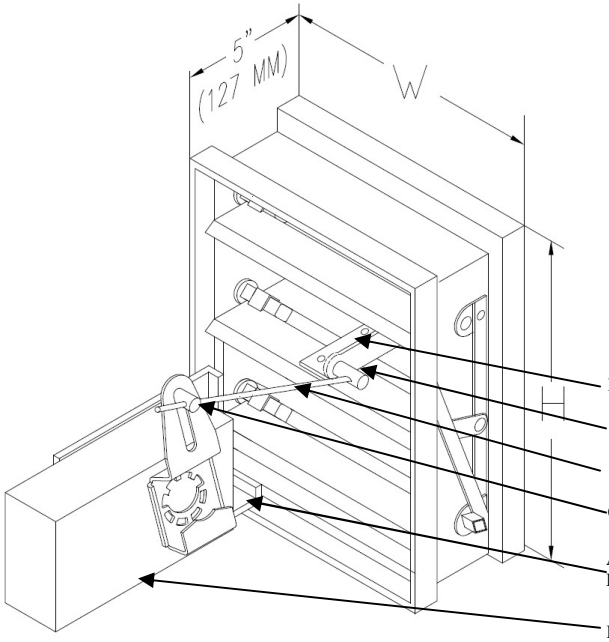


**COMPONENTS FOR DAMPER WITH ELECTRIC INTERNAL MOTOR:**

(1) ACTUATOR ASSEMBLY PACKAGE
  (1) ACTUATOR
  (1) ACTUATOR LINKING SHAFT
  (1) CRANK ARM
  (2) BALL JOINT ASSEMBLY
  (1) ACTUATOR MOUNTING BRACKET
(1) (BLADE MOUNTING BRACKET
(1) DAMPER SLEEVE (16") MINIMUM

(STANDARD SHEET METAL SCREWS ARE NOT PROVIDED)

**ACTUATORS:**
Manual, Electric, Pneumatic.
Belimo or Siemens.

**NOTE:**
Dampers supplied 1/4" less than order width and height unless specified "ACTUAL SIZE"

231 Commerce Dr. Montgomeryville, PA 18936
Tel: 215-412-4445 Fax: 215-412-4409
Email: lloydind@firedamper.com

138 Industrial Loop West, Orange Park, FL 32073
Tel: 904-541-1655 Fax: 904-541-1657
Email: lloydind1@firedamper.com

B1, 4/F., Luen Ming Hing Factory Building
36 Mok Cheong St.,
To Kwa Wan, Kowloon, H. K.
Tel: 852-2760-4188 Fax: 852-2760-4177
Email: tatanlexyim@lloydasia.com

Website: www.firedamper.com

*ALL STATED SPECIFICATIONS ARE SUBJECT TO UPDATE WITHOUT NOTICE OR OBLIGATION.



Lloyd Industries Inc. 2017

# ACTUATOR FOR AIR CONTROL DAMPER

**MODELS:**
**AC-10 (PARALLEL BLADE)**
**AC-20 (OPPOSED BLADE)**

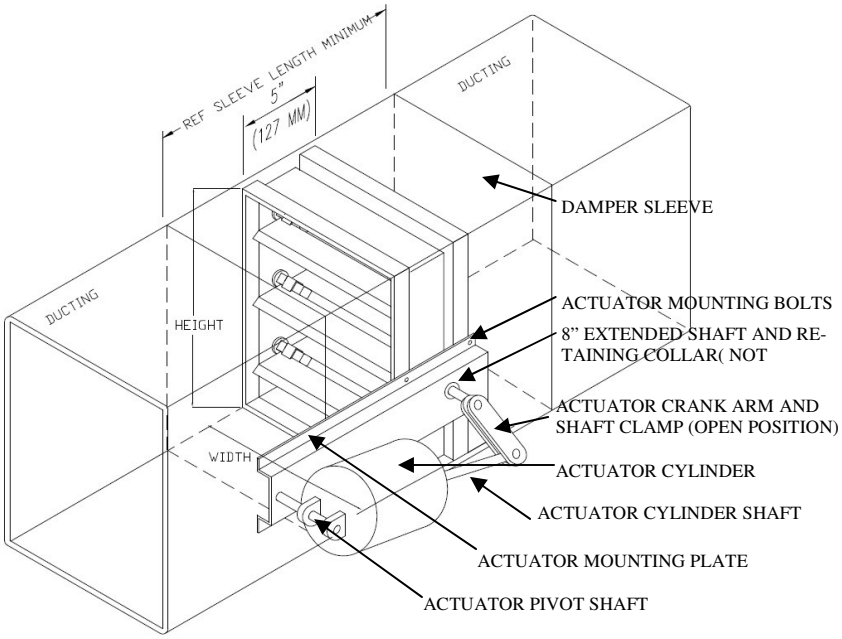


**COMPONENTS FOR DAMPER WITH PNEUMATIC EXTERNAL MOUNT MOTOR:**

(1) 8" EXTENDED SHAFT
(1) SHAFT RETAINING COLLAR
(1) ACTUATOR ASSEMBLY PACKAGE
  (1) CYLINDER
  (1) CRANK ARM WITH SHAFT CLAMP
  (1) ACTUATOR MOUNTING PLATE
  (1) PIVOT SHAFT ON MOUNTING PLATE
  (4) ACTUATOR PLATE MOUNTING SCREWS
(1) DAMPER SLEEVE (REF")

(STANDARD SHEET METAL SCREWS ARE NOT PROVIDED)

**ACTUATORS:**
Select motors from the SIMENS PNEUMATIC actuator list.

---

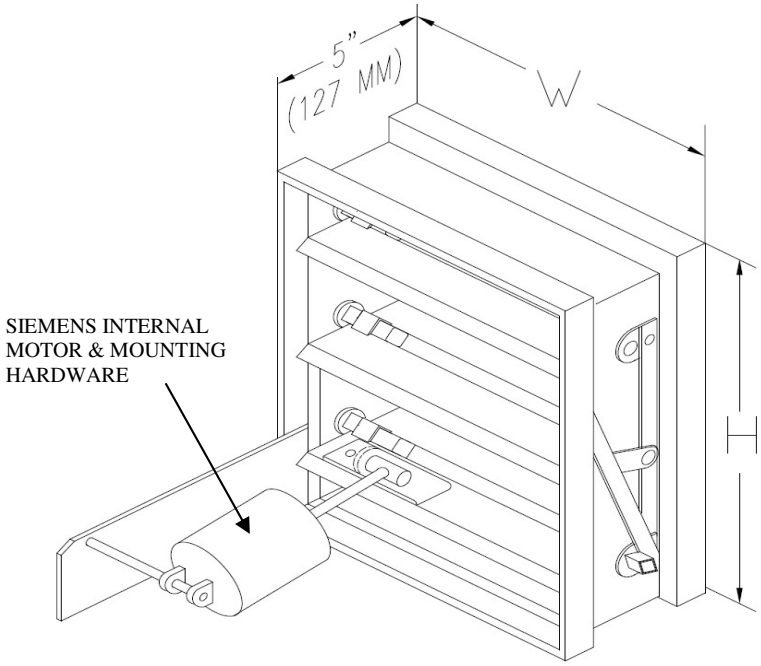


**COMPONENTS FOR DAMPER WITH PNEUMATIC INTERNAL MOUNT MOTOR:**

(1) ACTUATOR ASSEMBLY PACKAGE
  (1) CYLINDER
  (1) CRANK ARM WITH SHAFT CLAMP
  (1) ACTUATOR MOUNTING PLATE
  (1) PIVOT SHAFT ON MOUNTING PLATE
  (4) ACTUATOR PLATE MOUNTING SCREWS
(1) DAMPER SLEEVE (REF")

(STANDARD SHEET METAL SCREWS ARE NOT PROVIDED)

**ACTUATORS:**
Select motors from the SIMENS PNEUMATIC actuator list.

231 Commerce Dr. Montgomeryville, PA 18936
Tel: 215-412-4445 Fax: 215-412-4409
Email: lloydind@firedamper.com

138 Industrial Loop West, Orange Park, FL 32073
Tel: 904-541-1655 Fax: 904-541-1657
Email: lloydind1@firedamper.com

B1, 4/F., Luen Ming Hing Factory Building
36 Mok Cheong St.,
To Kwa Wan, Kowloon, H. K.
Tel: 852-2760-4188 Fax: 852-2760-4177
Email: tatanlexyim@lloydasia.com

Website: www.firedamper.com

*ALL STATED SPECIFICATIONS ARE SUBJECT TO UPDATE WITHOUT NOTICE OR OBLIGATION.



Lloyd Industries Inc. 2017

# ACTUATOR FOR DIVERTER AND SIDE PLATE

**MODELS:**
**AC-10 (PARALLEL BLADE)**
**AC-20 (OPPOSED BLADE)**

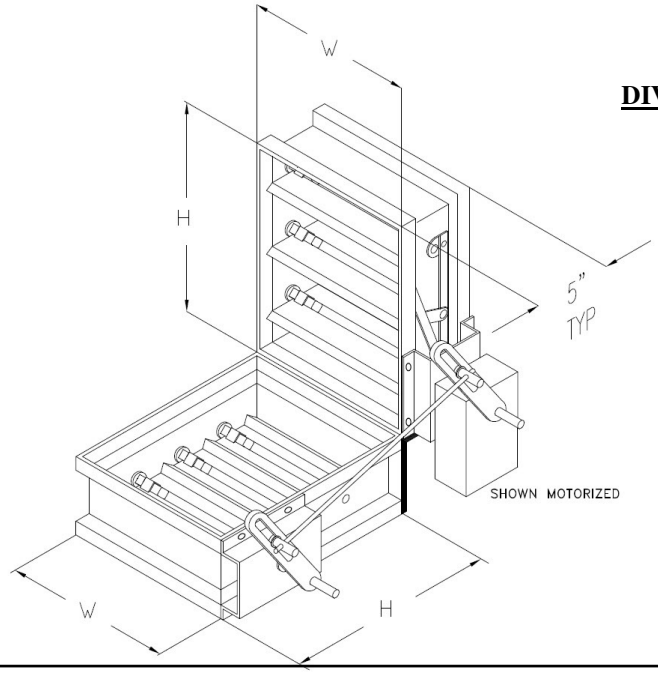


## DIVERTER AIR CONTROL DAMPER COMBINATIONS

## LINKAGE ASSEMBLY INCLUDES:

(2) Crank Arm Assemblies (10026)
(1) Jackshaft (10025)
(2) Bearing Brackets (10092)
(2) Swivels

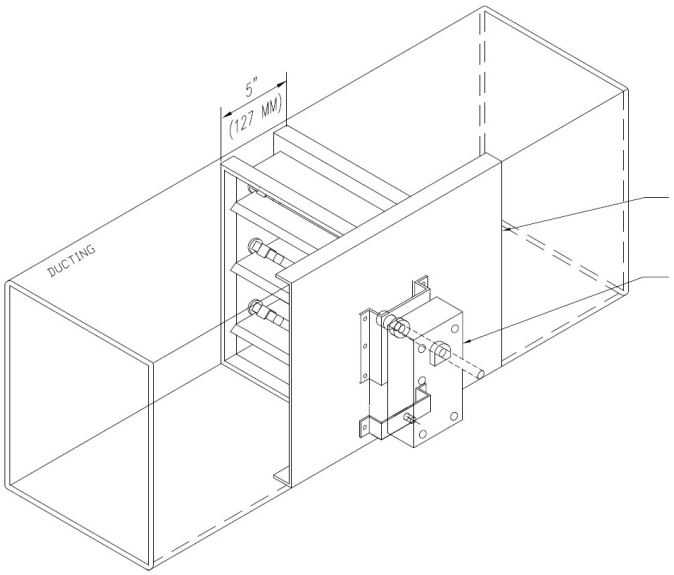


NOTE:
SPECIFY SLEEVE LENGTH AND IF DUCT SIZE IS NOT IDENTICAL TO DAMPER SIZES.
(i.e. INSULATED DUCTING)
REFER TO THE ACTUATOR SELECTION INFORMATION FOR ALL OTHER COMPONENTS REQUIRED

## COMPONENTS FOR DAMPER WITH SINGLE SIDE COVERING SLEEVE:

(1) DAMPER SINGLE COVER SLEEVE

NOTE: SPECIFY SLEEVE LENGTH AND IF DUCT SIZE IN NOT IDENTICAL TO DAMPER SIZES. (i.e. INSULATED DUCTING)
REFER TO THE ACTUATOR SELECTION INFORMATION FOR ALL OTHER COMPONENT REQUIRED.

(STANDARD SHEET METAL SCREWS ARE NOT PROVIDED)

BELIMO (SHOWN)
POWER OPEN/SPRING CLOSE
POWER CLOSE/SPRING OPEN
POWER MODULATING
AVAILABLE IN: 120 VAC, 24 VAC, 24 VDC, 24 VDC WITH 2-10V DC CONTROLLING (MODULATING) END SWITCHES AVAILABLE

231 Commerce Dr. Montgomeryville, PA 18936
Tel: 215-412-4445 Fax: 215-412-4409
Email: lloydind@firedamper.com

138 Industrial Loop West, Orange Park, FL 32073
Tel: 904-541-1655 Fax: 904-541-1657
Email: lloydind1@firedamper.com

B1, 4/F., Luen Ming Hing Factory Building
36 Mok Cheong St.,
To Kwa Wan, Kowloon, H. K.
Tel: 852-2760-4188 Fax: 852-2760-4177
Email: tatanlexyim@lloydasia.com

Website: www.firedamper.com

*ALL STATED SPECIFICATIONS ARE SUBJECT TO UPDATE WITHOUT NOTICE OR OBLIGATION.



Lloyd Industries Inc. 2017

# AIR CONTROL DAMPER/ LOUVER COMBO

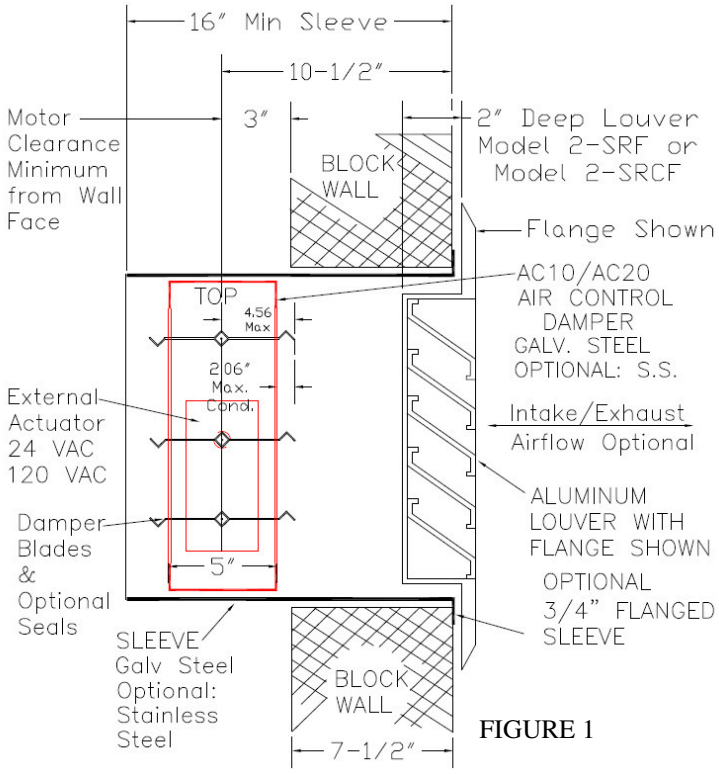


FIGURE 1

FIGURE 1 ILLUSTRATES THE COMBINATION OF LOUVER/ AIR CONTROL DAMPER/ SLEEVE/ MOTOR FOR 2" DEEP 2-SRF & 2-SRCF LOUVERS FOR INSTALLATION INTO 7-1/2" BLOCK WALLS
**(Min. sleeve length depends on the wall thickness)

FIGURE 2 ILLUSTRATES THE COMBINATION OF LOUVER/ AIR CONTROL DAMPER/ SLEEVE/ QUADRANT FOR 2" DEEP 2-SRF & 2-SRCF LOUVERS FOR INSTALLATION INTO 7-1/2" BLOCK WALLS
**(Min. sleeve length depends on the wall thickness)

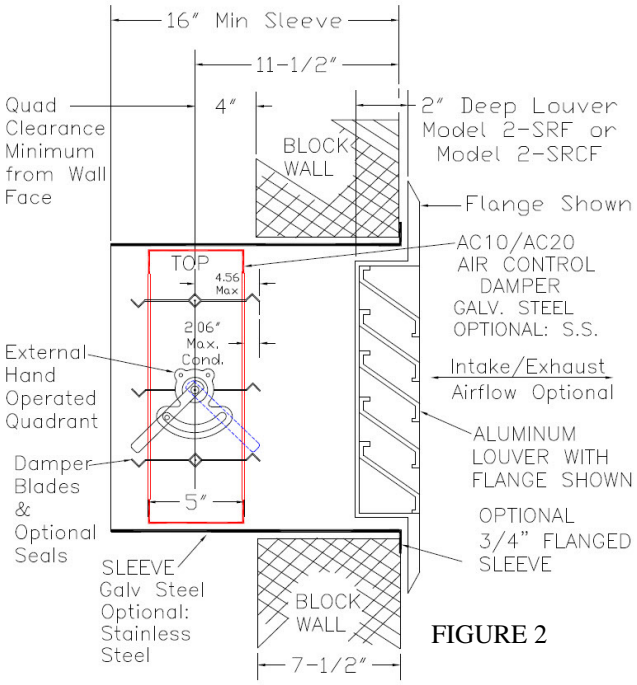


FIGURE 2

231 Commerce Dr. Montgomeryville, PA 18936
Tel: 215-412-4445 Fax: 215-412-4409
Email: lloydind@firedamper.com

138 Industrial Loop West, Orange Park, FL 32073
Tel: 904-541-1655 Fax: 904-541-1657
Email: lloydind1@firedamper.com

B1, 4/F., Luen Ming Hing Factory Building
36 Mok Cheong St.,
To Kwa Wan, Kowloon, H. K.
Tel: 852-2760-4188 Fax: 852-2760-4177
Email: tatanlexyim@lloydasia.com

Website: www.firedamper.com

*ALL STATED SPECIFICATIONS ARE SUBJECT TO UPDATE WITHOUT NOTICE OR OBLIGATION.



Lloyd Industries Inc. 2017

# AIR CONTROL DAMPER/ LOUVER COMBO

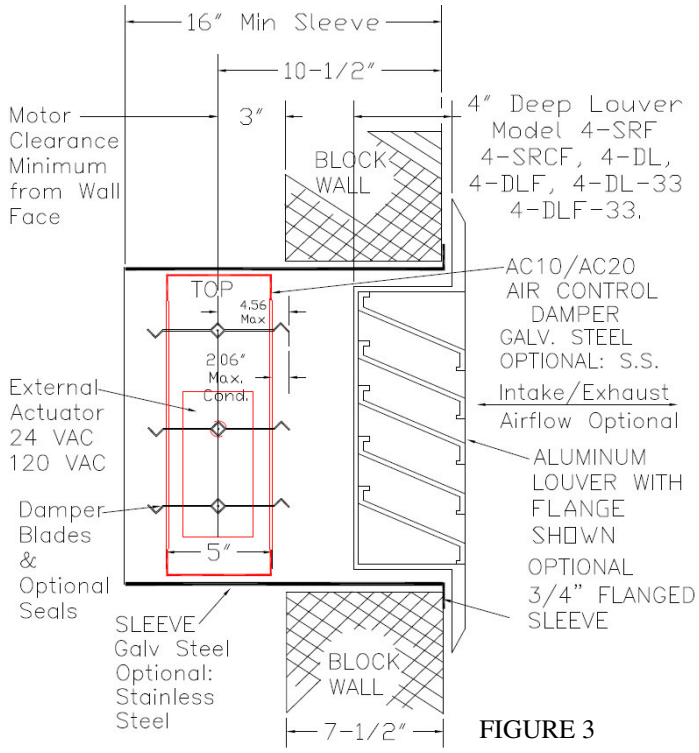


FIGURE 3

FIGURE 3 ILLUSTRATES THE COMBINATION OF LOUVER/ AIR CONTROL DAMPER/ SLEEVE/ MOTOR FOR 4" DEEP 4-SRF & 4-SRCF, 4-DL, 4-DLF LOUVERS FOR INSTALLATION INTO 7-1/2" BLOCK WALLS
**(Min. sleeve length depends on the wall thickness)

FIGURE 4 ILLUSTRATES THE COMBINATION OF LOUVER/ AIR CONTROL DAMPER/ SLEEVE/ QUADRANT FOR 4" DEEP 4-SRF & 4-SRCF,4-DL, 4-DLF LOUVERS FOR INSTALLATION INTO 7-1/2" BLOCK WALLS
**(Min. sleeve length depends on the wall thickness)

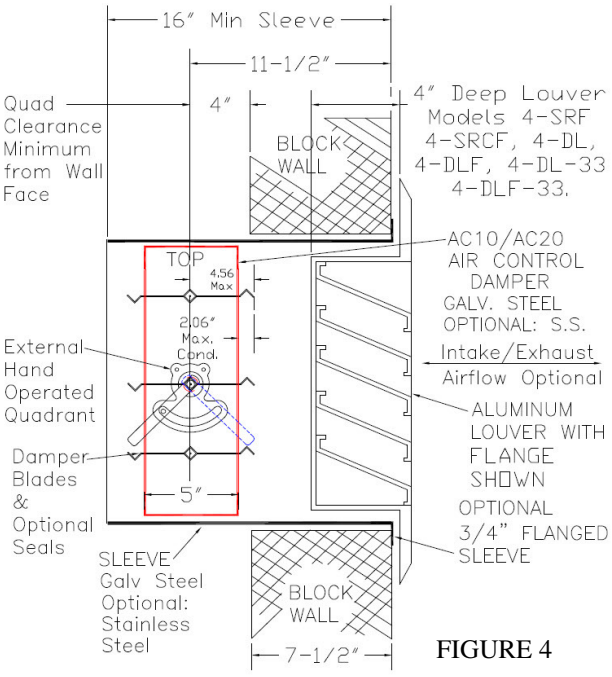


FIGURE 4

231 Commerce Dr. Montgomeryville, PA 18936
Tel: 215-412-4445 Fax: 215-412-4409
Email: lloydind@firedamper.com

138 Industrial Loop West, Orange Park, FL 32073
Tel: 904-541-1655 Fax: 904-541-1657
Email: lloydind1@firedamper.com

B1, 4/F., Luen Ming Hing Factory Building
36 Mok Cheong St.,
To Kwa Wan, Kowloon, H. K.
Tel: 852-2760-4188 Fax: 852-2760-4177
Email: tatanlexyim@lloydasia.com

Website: www.firedamper.com

*ALL STATED SPECIFICATIONS ARE SUBJECT TO UPDATE WITHOUT NOTICE OR OBLIGATION.



Lloyd Industries Inc. 2017

# AIR CONTROL DAMPER/ LOUVER COMBO

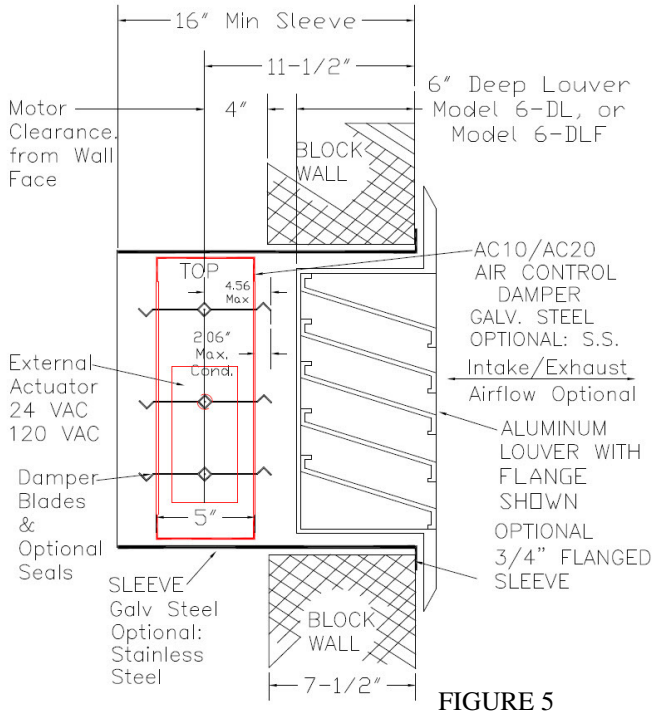


FIGURE 5

FIGURE 5 ILLUSTRATES THE COMBINATION OF LOUVER/ AIR CONTROL DAMPER/ SLEEVE/ MOTOR FOR 6" DEEP 6-DL, 6-DLF DRAINABLE LOUVERS FOR INSTALLATION INTO 7-1/2" BLOCK WALLS
**(Min. sleeve length depends on the wall thickness)

FIGURE 6 ILLUSTRATES THE COMBINATION OF LOUVER/ AIR CONTROL DAMPER/ SLEEVE/ QUADRANT FOR 6" DEEP 6-DL, 6-DLF DRAINABLE LOUVERS FOR INSTALLATION INTO 7-1/2" BLOCK WALLS
**(Min. sleeve length depends on the wall thickness)

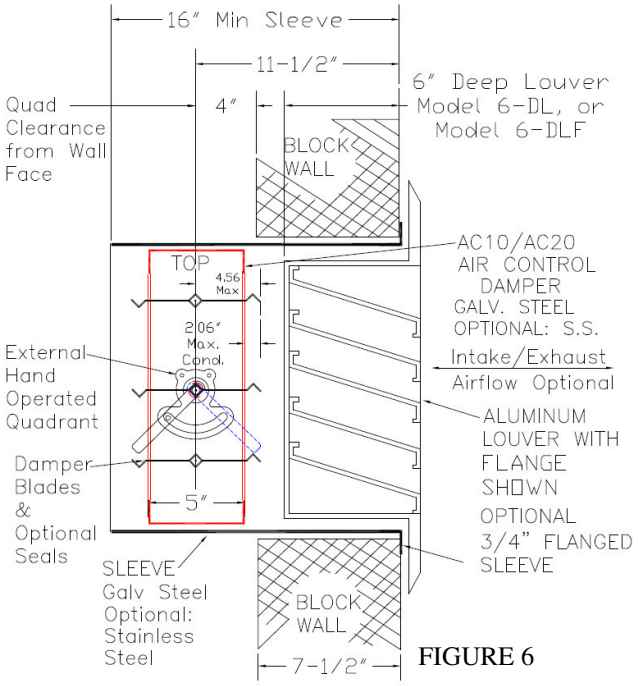


FIGURE 6

231 Commerce Dr. Montgomeryville, PA 18936
Tel: 215-412-4445 Fax: 215-412-4409
Email: lloydind@firedamper.com

138 Industrial Loop West, Orange Park, FL 32073
Tel: 904-541-1655 Fax: 904-541-1657
Email: lloydind1@firedamper.com

B1, 4/F., Luen Ming Hing Factory Building
36 Mok Cheong St.,
To Kwa Wan, Kowloon, H. K.
Tel: 852-2760-4188 Fax: 852-2760-4177
Email: tatanlexyim@lloydasia.com

Website: www.firedamper.com

*ALL STATED SPECIFICATIONS ARE SUBJECT TO UPDATE WITHOUT NOTICE OR OBLIGATION.



Lloyd Industries Inc. 2017

# COMBINATION OF AIR CONTROL DAMPER AND LOUVER

**MODELS:**
**AC10 (PARALLEL BLADE)**
**AC20 (OPPOSED BLADE)**

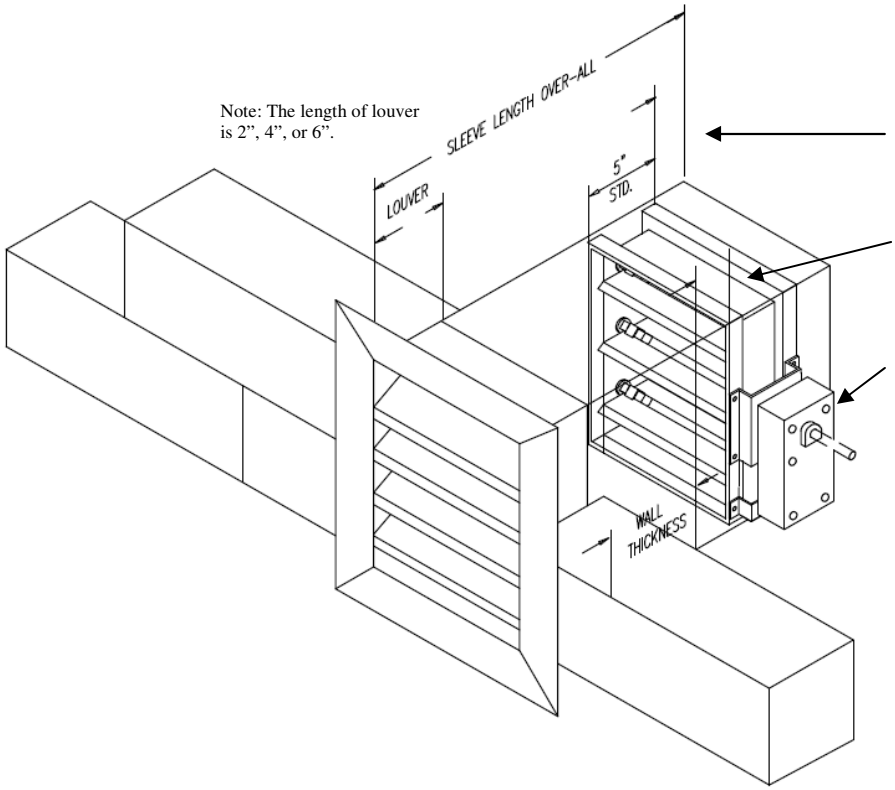


Added sleeve length not required for external direct mounted actuators unless specified

3" partition clearance for direct mounted external actuators

Direct mount external actuator with extended shaft and bearing bracket

COMBINATION ASSEMBLIES **(COMBO-4)**
- Air control damper
- Louver ( 4-SRF)
- Actuator (**External** mount)

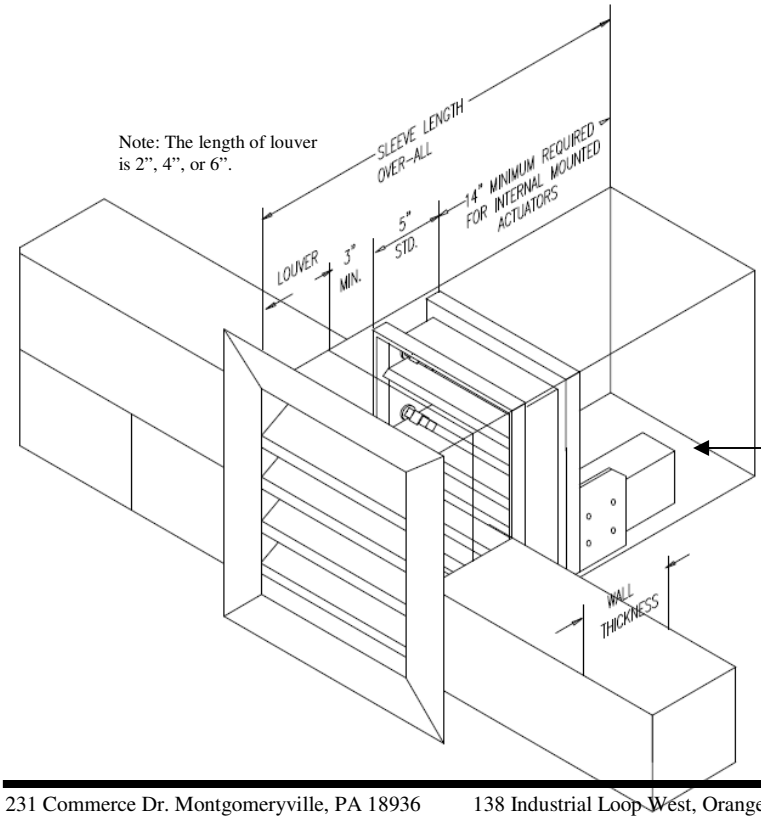


Internal actuator mount

COMBINATION ASSEMBLIES **(COMBO-2)**
- Air control damper
- Louver ( 4-SRF)
- Actuator (**Internal** mount)
- Sleeve

231 Commerce Dr. Montgomeryville, PA 18936
Tel: 215-412-4445 Fax: 215-412-4409
Email: lloydind@firedamper.com

138 Industrial Loop West, Orange Park, FL 32073
Tel: 904-541-1655 Fax: 904-541-1657
Email: lloydind1@firedamper.com

B1, 4/F., Luen Ming Hing Factory Building
36 Mok Cheong St.,
To Kwa Wan, Kowloon, H. K.
Tel: 852-2760-4188 Fax: 852-2760-4177
Email: tatanlexyim@lloydasia.com

Website: www.firedamper.com

*ALL STATED SPECIFICATIONS ARE SUBJECT TO UPDATE WITHOUT NOTICE OR OBLIGATION.



Lloyd Industries Inc. 2017

# COMBINATION OF AIR CONTROL DAMPER AND LOUVER

**MODELS:**
**AC10 (PARALLEL BLADE)**
**AC20 (OPPOSED BLADE)**

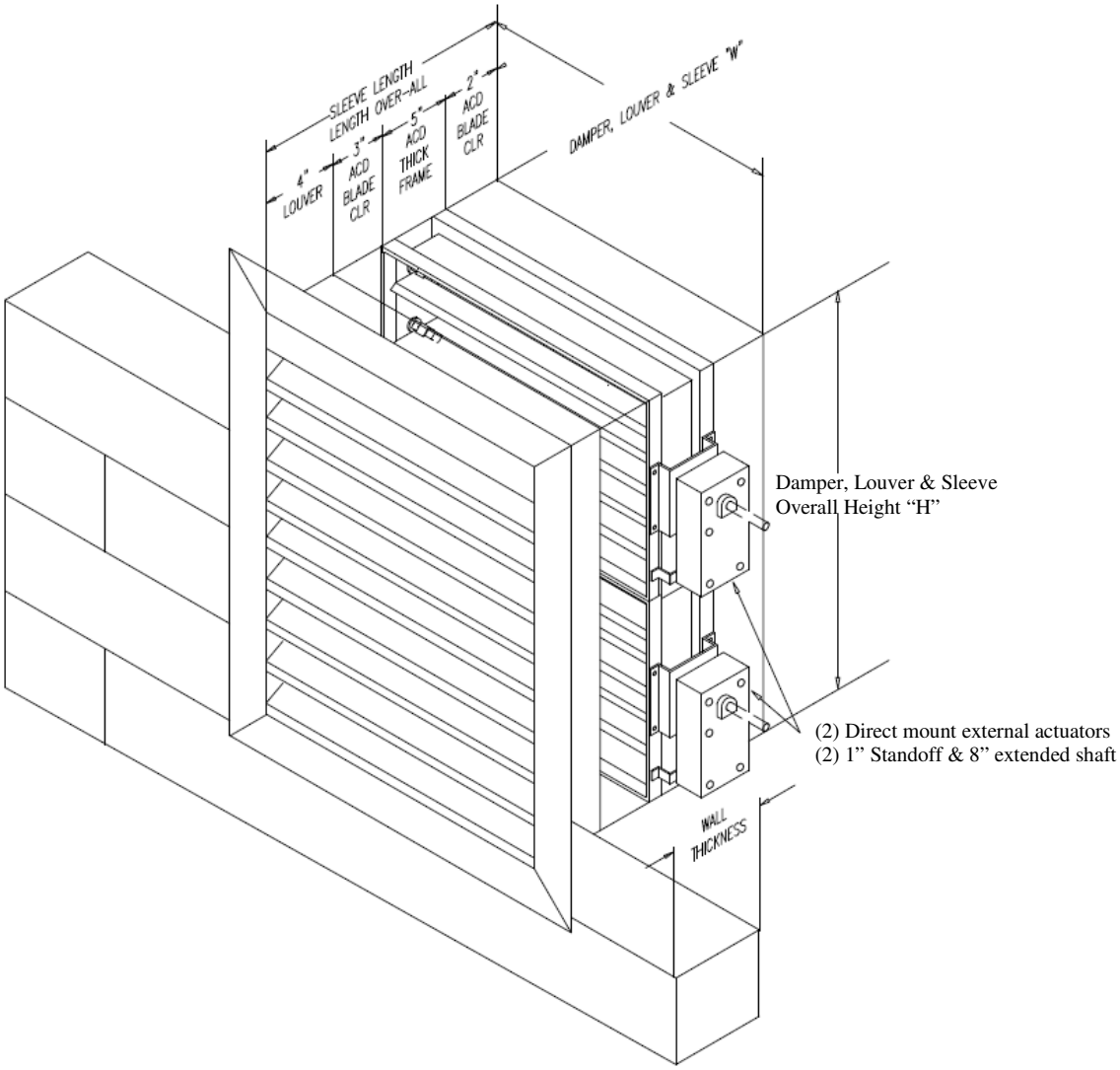


## INSTALLATION NOTES:

1. Un-clamp the actuators from extended shaft.
2. Remove (12) actuator mounting bracket fasteners.
3. Install the assembly from the exterior wall side.
4. Secure and caulk the sleeve as required to support and seal the unit.
5. Assemble the actuators and actuator support brackets.
6. Connect power as per local code.
7. Cycle test and inspect.

231 Commerce Dr. Montgomeryville, PA 18936
Tel: 215-412-4445 Fax: 215-412-4409
Email: lloydind@firedamper.com

138 Industrial Loop West, Orange Park, FL 32073
Tel: 904-541-1655 Fax: 904-541-1657
Email: lloydind1@firedamper.com

B1, 4/F., Luen Ming Hing Factory Building
36 Mok Cheong St.,
To Kwa Wan, Kowloon, H. K.
Tel: 852-2760-4188 Fax: 852-2760-4177
Email: tatanlexyim@lloydasia.com

Website: www.firedamper.com

*ALL STATED SPECIFICATIONS ARE SUBJECT TO UPDATE WITHOUT NOTICE OR OBLIGATION.



Lloyd Industries Inc. 2017

# AIR CONTROL DAMPER

**MODELS:**
**AC10 (PARALLEL BLADE)**
**AC20 (OPPOSED BLADE)**

Lloyd's air control dampers are offered with two different types of optional removable 8" extended shaft and bearing brackets. Drawings below illustrates these different configurations and the components.

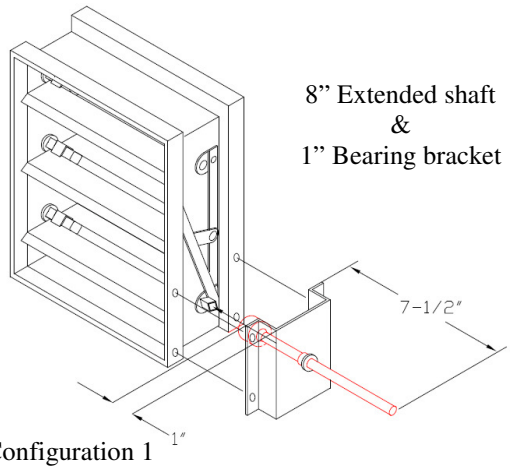


Configuration 1

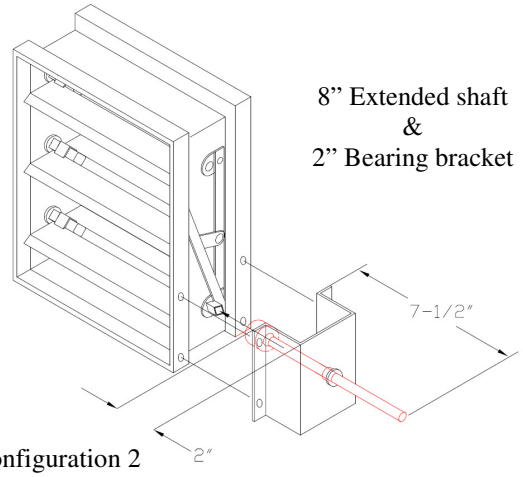


Configuration 2

## DAMPER EXTENDED SHAFT & BEARING BRACKET HARDWARE

8" Extended shaft

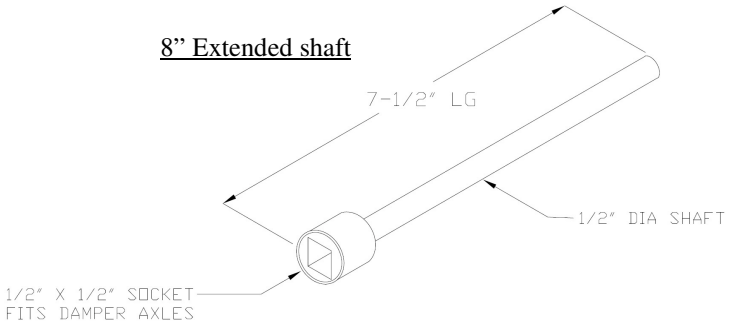


NOTE:
2" bearing brackets provided with shaft retainer collar.

1" Bearing bracket

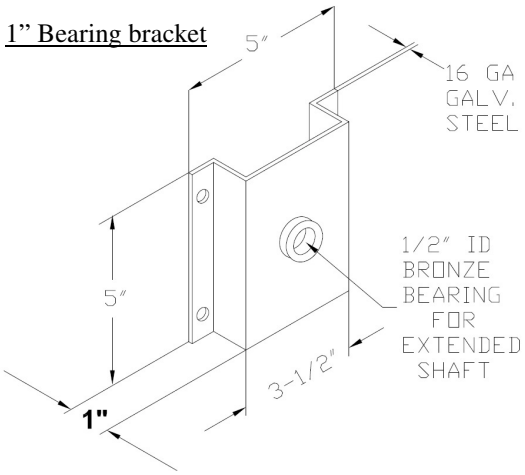


2" Bearing bracket

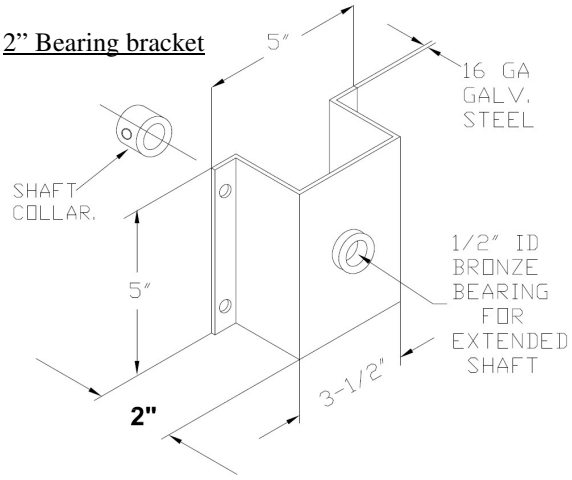


SOLD INDIVIDUALLY OR AS BEARING BRACKET SET. (1) EXTENDED SHAFT & (1) BEARING BRACKET

231 Commerce Dr. Montgomeryville, PA 18936
Tel: 215-412-4445 Fax: 215-412-4409
Email: lloydind@firedamper.com

138 Industrial Loop West, Orange Park, FL 32073
Tel: 904-541-1655 Fax: 904-541-1657
Email: lloydind1@firedamper.com

B1, 4/F., Luen Ming Hing Factory Building
36 Mok Cheong St.,
To Kwa Wan, Kowloon, H. K.
Tel: 852-2760-4188 Fax: 852-2760-4177
Email: tatanlexyim@lloydasia.com

Website: www.firedamper.com

*ALL STATED SPECIFICATIONS ARE SUBJECT TO UPDATE WITHOUT NOTICE OR OBLIGATION.



Lloyd Industries Inc. 2017

# AIR CONTROL DAMPER BLADES & LINKAGE



**AC10/20 with external actuator**

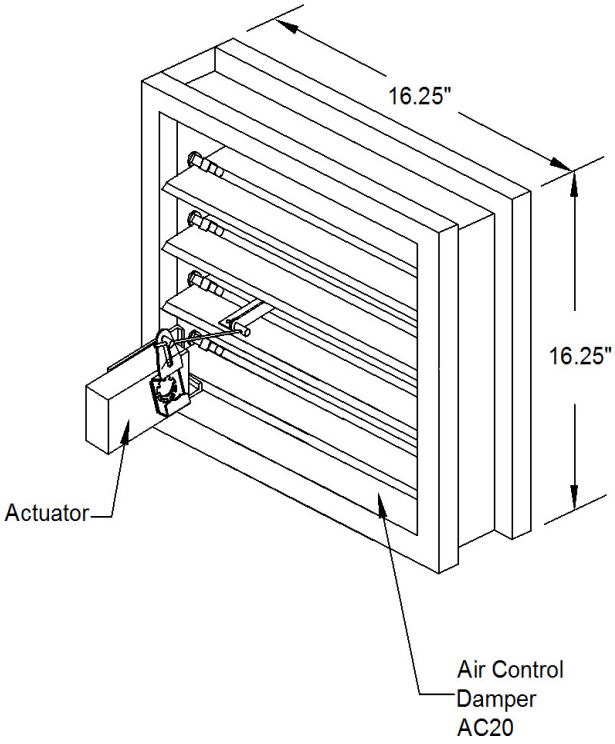


**AC10/20 with internal actuator**

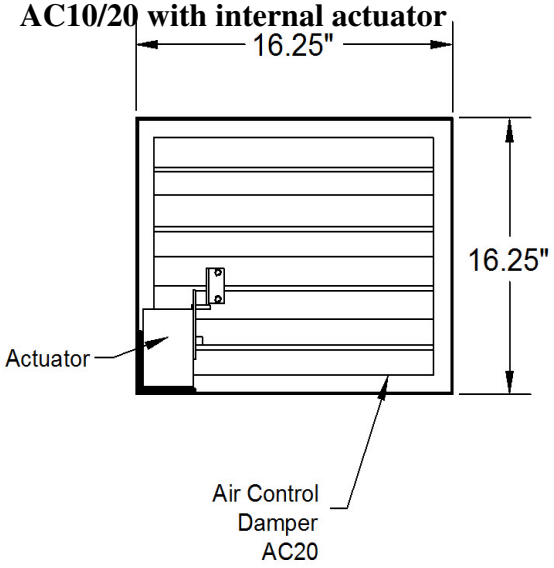


231 Commerce Dr. Montgomeryville, PA 18936
Tel: 215-412-4445 Fax: 215-412-4409
Email: lloydind@firedamper.com

138 Industrial Loop West, Orange Park, FL 32073
Tel: 904-541-1655 Fax: 904-541-1657
Email: lloydind1@firedamper.com

B1, 4/F., Luen Ming Hing Factory Building
36 Mok Cheong St.,
To Kwa Wan, Kowloon, H. K.
Tel: 852-2760-4188 Fax: 852-2760-4177
Email: tatanlexyim@lloydasia.com

Website: www.firedamper.com

*ALL STATED SPECIFICATIONS ARE SUBJECT TO UPDATE WITHOUT NOTICE OR OBLIGATION.



Lloyd Industries Inc. 2017

# AIR CONTROL DAMPER



**MODELS:**
**AC10 SINGLE BLADE**
**Flat Top**

## APPLICATION

The AC10 single blade is a rectangle single blade, galvanized steel control damper for HVAC systems. A wide range of electric and pneumatic actuators are available.

### STANDARD CONSTRUCTION

**FRAME:** 16 Ga. (1.5mm) galvanized steel
Interlocking stacked hat section
Channel side flat top & bottom

**BLADES :** 16 Ga. galvanized V formed

**BEARINGS:** Non-metallic celcon

**AXLES:** 1/2 Sq. zinc plated steel studs

**LINKAGE:** 10 Ga. zinc plated steel
Concealed in frame

**FINISH:** Mill galvanized

**Standard 2-1/2" extended shaft:**

Fixed 1/2 in dia. zinc plated steel shaft extending 2 1/2 in beyond the air control damper frame.

| Single Section | | Multiple Section |
|---|---|---|
| Minimum Size (WxH) | Maximum Size (WxH) | Maximum Size (WxH) |
| 4"x6" | 60"x10" | UNLIMITED |

### OPTIONS:

Neoprene blade seals
Stainless steel jamb seals
Bronze bearings
*Flat head & sill frame construction for max. air flow sizes 4" high to 8" high
Stainless steel or aluminum construction
Sleeve: refer to the ACD sleeve specs.

### ACTUATORS:

Manual, electric, pneumatic

**** Optional removable 8" extended shaft:**

1/2 dia. Shaft extending 7-1/2 inches beyond the air control frame.
Requires 1" or 2" bearing brackets.

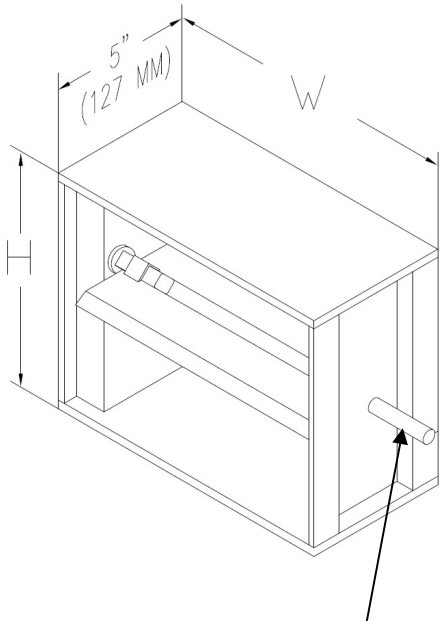


STANDARD 2-1/2" LG
EXTENDED SHAFT

231 Commerce Dr. Montgomeryville, PA 18936
Tel: 215-412-4445 Fax: 215-412-4409
Email: lloydind@firedamper.com

138 Industrial Loop West, Orange Park, FL 32073
Tel: 904-541-1655 Fax: 904-541-1657
Email: lloydind1@firedamper.com

B1, 4/F., Luen Ming Hing Factory Building
36 Mok Cheong St.,
To Kwa Wan, Kowloon, H. K.
Tel: 852-2760-4188 Fax: 852-2760-4177
Email: tatanlexyim@lloydasia.com

*ALL STATED SPECIFICATIONS ARE SUBJECT TO UPDATE WITHOUT NOTICE OR OBLIGATION.



Lloyd Industries Inc. 2017

# JUMPER BRACKET FOR AIR CONTROL DAMPER

**MODELS:**
**AC10 (PARALLEL BLADE)**
**AC20 (OPPOSED BLADE)**

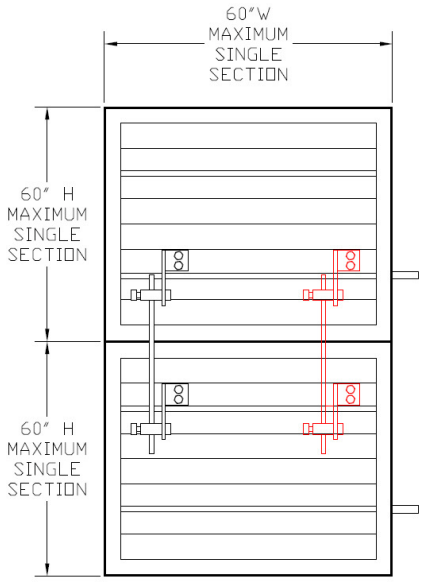


Vertical Jumper bracket quantities:
Use (1) Jumper bracket for air control dampers up to 32" high
Use (2) Jumper brackets for air control dampers above 32" High

## Jumper Bracket WITHOUT Internal Mounted Motors

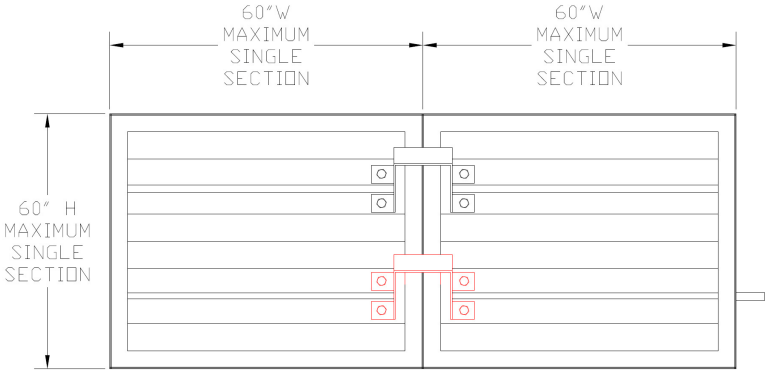


Horizontal Jumper bracket quantities:
Use (1) Jumper bracket for air control dampers up to 32" high
Use (2) Jumper brackets for air control dampers above 32" High

## Jumper Bracket WITH Internal Mounted Motors

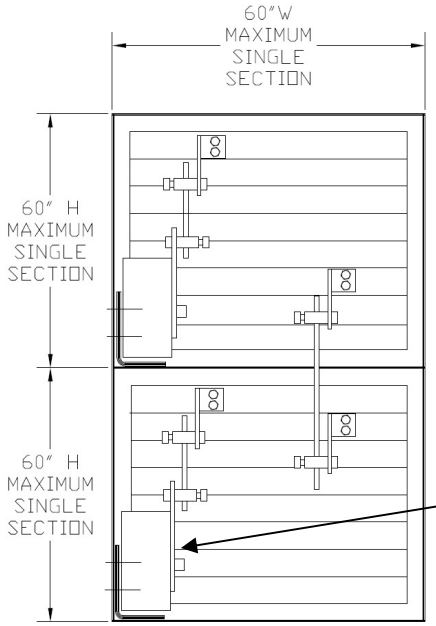


Vertical Jumper bracket quantities:
Use (1) Jumper bracket for air control dampers up to 32" high
Use (2) Jumper brackets for air control dampers above 32" High

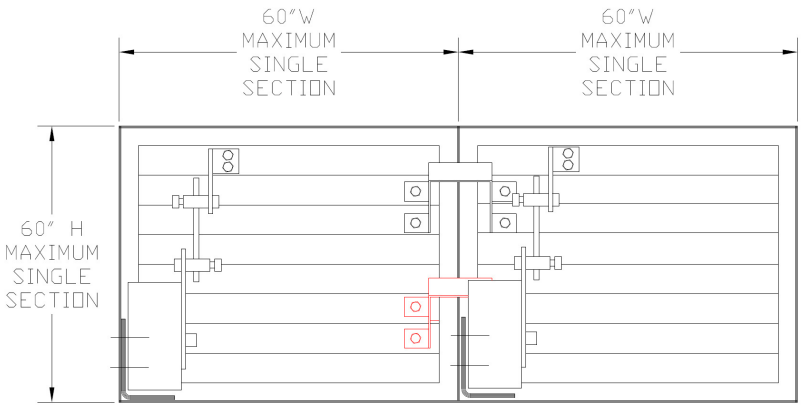


Horizontal Jumper bracket quantities:
Use (1) Jumper bracket for air control dampers up to 32" high
Use (2) Jumper brackets for air control dampers above 32" High

**NOTE:**
**Internal mounting brackets are designed for Lloyd Industries supplied motors. Motor substitution may require bracket and linkage changes.**

231 Commerce Dr. Montgomeryville, PA 18936
Tel: 215-412-4445 Fax: 215-412-4409
Email: lloydind@firedamper.com

138 Industrial Loop West, Orange Park, FL 32073
Tel: 904-541-1655 Fax: 904-541-1657
Email: lloydind1@firedamper.com

B1, 4/F., Luen Ming Hing Factory Building
36 Mok Cheong St.,
To Kwa Wan, Kowloon, H. K.
Tel: 852-2760-4188 Fax: 852-2760-4177
Email: tatanlexyim@lloydasia.com

Website: www.firedamper.com

*ALL STATED SPECIFICATIONS ARE SUBJECT TO UPDATE WITHOUT NOTICE OR OBLIGATION.



Lloyd Industries Inc. 2017

# JUMPER BRACKET HARDWAR FOR AIR CONTROL DAMPER

**MODELS:**
**AC10 (PARALLEL BLADE)**
**AC20 (OPPOSED BLADE)**

## DAMPER MULTIPLE SECTIONS JUMPER BRACKET HARDWARE

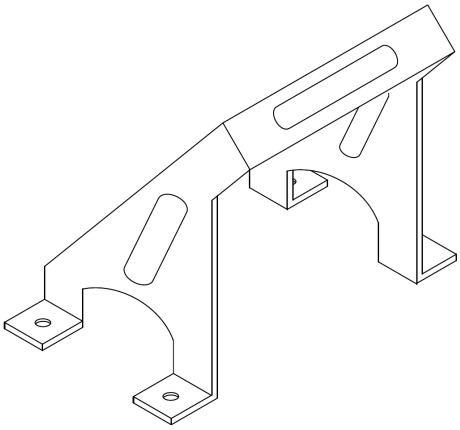

Horizontal multiple sections damper
Blade mounting jumper bracket for side by side dampers
Use 1/unit for dampers up to 32" W
Use 2/unit for dampers above 32" W

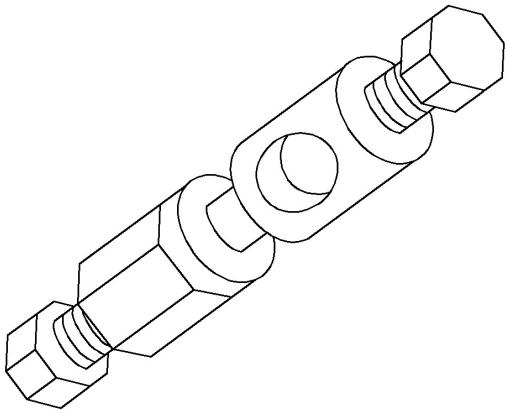

Vertical multiple sections damper
Jumper 5/16" Connecting rod swivels
Use 2/unit for dampers up to 32" W
Use 4/unit for dampers above 32" W

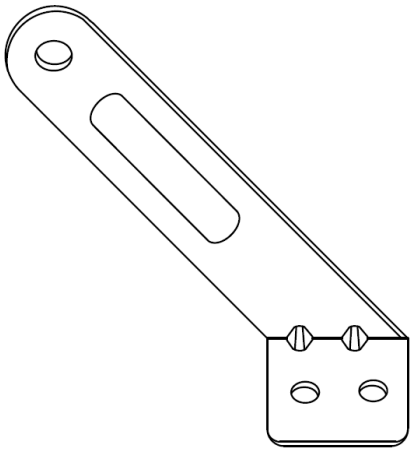

Vertical multiple sections damper
Blade mounting jumper bracket for over/under damper assemblies
Use 2/unit for dampers up to 32" W
Use 4/unit for dampers above 32" W

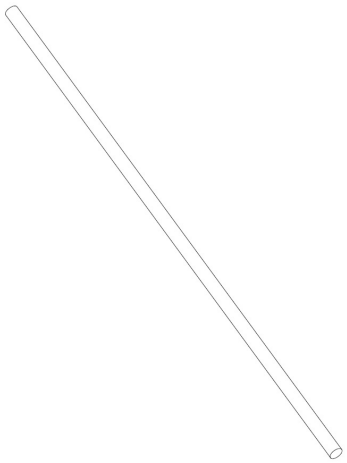

Vertical multiple sections damper
Jumper 5/16" dia. Connecting rod
Use 1/unit for dampers up to 32" W
Use 2/unit for dampers above 32" W

| Model | Single Section | | Multiple Sections |
|---|---|---|---|
| | Minimum Size (WxH) | Maximum Size (WxH) | Maximum Size (WxH) |
| AC10 | 6"X6" | 60"x60" | UNLIMITED |
| AC20 | 6"x10-1/4" | 60"x60" | |

SOLD INDIVIDUALLY OR AS JUMPER SET.

231 Commerce Dr. Montgomeryville, PA 18936
Tel: 215-412-4445 Fax: 215-412-4409
Email: lloydind@firedamper.com

138 Industrial Loop West, Orange Park, FL 32073
Tel: 904-541-1655 Fax: 904-541-1657
Email: lloydind1@firedamper.com

B1, 4/F., Luen Ming Hing Factory Building
36 Mok Cheong St.,
To Kwa Wan, Kowloon, H. K.
Tel: 852-2760-4188 Fax: 852-2760-4177
Email: tatanlexyim@lloydasia.com

Website: www.firedamper.com

*ALL STATED SPECIFICATIONS ARE SUBJECT TO UPDATE WITHOUT NOTICE OR OBLIGATION.



Lloyd Industries Inc. 2017

# LLOYD INDUSTRIES INC.

WWW.FIREDAMPER.COM

## AIR CONTROL DAMPER (AIR FOIL)



**MODELS:**
**AC10-AF (PARALLEL BLADE)**
**AC20-AF (OPPOSED BLADE)**

**APPLICATION**

The AC10-AF & AC20-AF are an ultra low leakage, galvanized steel damper with aluminum airfoil blades for high velocity and medium to high pressure HVAC systems. They provide ultra-low leakage and unsurpassed pressure drop performance. The AC10-AF & AC20-AF are designed for reducing pressure drop and less noise generation.

**STANDARD CONSTRUCTION**

| | |
|---|---|
| **FRAME:** | 5in. X 1in. Channel<br>16 Ga. (1.5mm) galvanized steel<br>(Optional: 16 Ga. Aluminum) |
| **BLADES:** | Aluminum air foil<br>(Opposed or Parallel)<br>TPV blade seals<br>Stainless steel jamb seals<br>(Opposed or Parallel) |
| **BEARINGS:** | Non-metallic celcon |
| **AXLES:** | 1/2 Sq zinc plated steel stud |
| **LINKAGE:** | Concealed in frame<br>10 Ga. zinc plated steel |
| **SHAFT:** | 2-1/2" Extended shaft<br>Fixed 1/2 inch diameter<br>zinc plated steel |

**OPTIONAL COMPONENTS**

- Stainless steel jamb seals
- Bronze bearings
- Sleeves-manual, electric, pneumatic
- Actuators-manual, electric, pneumatic
- Removable 8" extended shaft
- 1/2" Dia. shaft extending 7-1/2 beyond the air control frame requires 1" or 2" bearing

| Model | Single Section | | Multiple Sections |
|---|---|---|---|
| | Minimum Size (WxH) | Maximum Size (WxH) | Maximum Size (WxH) |
| AC10-AF | 6X6 | 72x72 | UNLIMITED |
| AC20-AF | 6x11 | 72x72 | |

BLADE OPERATION:

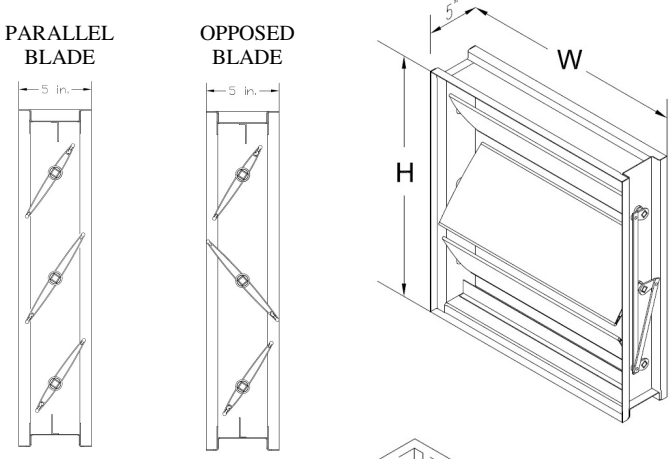


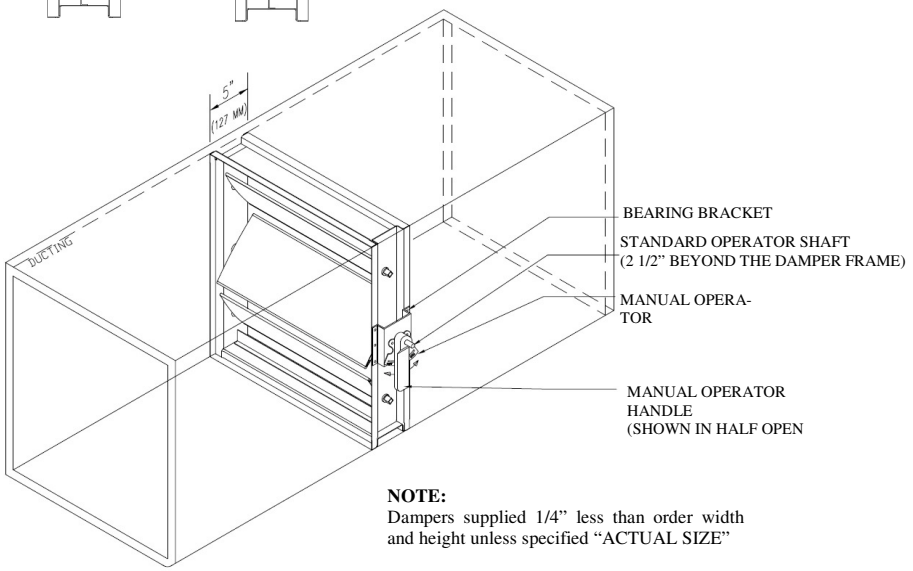


**NOTE:**
Dampers supplied 1/4" less than order width and height unless specified "ACTUAL SIZE"


231 Commerce Dr. Montgomeryville, PA 18936
Tel: 215-412-4445 Fax: 215-412-4409
Email: lloydind@firedamper.com

138 Industrial Loop West, Orange Park, FL 32073
Tel: 904-541-1655 Fax: 904-541-1657
Email: lloydind1@firedamper.com

B1, 4/F., Luen Ming Hing Factory Building
36 Mok Cheong St.,
To Kwa Wan, Kowloon, H. K.
Tel: 852-2760-4188 Fax: 852-2760-4177
Email: tatanlexyim@lloydasia.com

Website: www.firedamper.com



*ALL STATED SPECIFICATIONS ARE SUBJECT TO UPDATE WITHOUT NOTICE OR OBLIGATION.





Lloyd Industries Inc. 2017

# AIR CONTROL DAMPER (AIR FOIL)

**MODELS:**
**AC10-AF (PARALLEL BLADE)**
**AC20-AF (OPPOSED BLADE)**

## AMCA Certified Pressure Drop Data

## AMCA 5.3

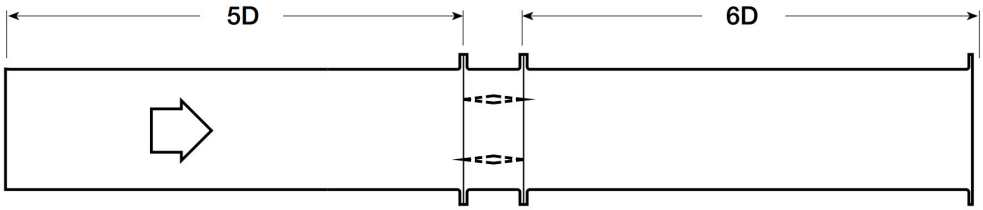


| 12"x12" | |
|---|---|
| Velocity (fpm) | Pressure Drop (in. Wg.) |
| 500 | 0.025 |
| 1000 | 0.120 |
| 1500 | 0.210 |
| 2000 | 0.480 |

| 24"x24" | |
|---|---|
| Velocity (fpm) | Pressure Drop (in. Wg.) |
| 500 | 0.003 |
| 1000 | 0.019 |
| 1500 | 0.045 |
| 2000 | 0.090 |

| 36"x36" | |
|---|---|
| Velocity (fpm) | Pressure Drop (in. Wg.) |
| 500 | 0.002 |
| 1000 | 0.012 |
| 1500 | 0.025 |
| 2000 | 0.050 |

| 12"x48" | |
|---|---|
| Velocity (fpm) | Pressure Drop (in. Wg.) |
| 500 | 0.005 |
| 1000 | 0.022 |
| 1500 | 0.040 |
| 2000 | 0.085 |

| 48"x12" | |
|---|---|
| Velocity (fpm) | Pressure Drop (in. Wg.) |
| 500 | 0.01 |
| 1000 | 0.05 |
| 1500 | 0.10 |
| 2000 | 0.12 |

Lloyd Industries certifies that the AC10-AF and AC20-AF herein are licensed to bear the AMCA Seal. The ratings shown are based on the tests and procedures performed in accordance with AMCA publication 511 and comply with the requirements of the AMCA Certified Ratings Program. The AMCA International Certified Rating Seal applies to Air Performance and Air Leakage.

231 Commerce Dr. Montgomeryville, PA 18936
Tel: 215-412-4445 Fax: 215-412-4409
Email: lloydind@firedamper.com

138 Industrial Loop West, Orange Park, FL 32073
Tel: 904-541-1655 Fax: 904-541-1657
Email: lloydind1@firedamper.com

B1, 4/F., Luen Ming Hing Factory Building
36 Mok Cheong St.,
To Kwa Wan, Kowloon, H. K.
Tel: 852-2760-4188 Fax: 852-2760-4177
Email: tatanlexyim@lloydasia.com

Website: www.firedamper.com

*ALL STATED SPECIFICATIONS ARE SUBJECT TO UPDATE WITHOUT NOTICE OR OBLIGATION.



Lloyd Industries Inc. 2017

# AIR CONTROL DAMPER (AIR FOIL)

**MODELS:**
**AC10-AF (PARALLEL BLADE)**
**AC20-AF (OPPOSED BLADE)**

AMCA Certified Leakage Data

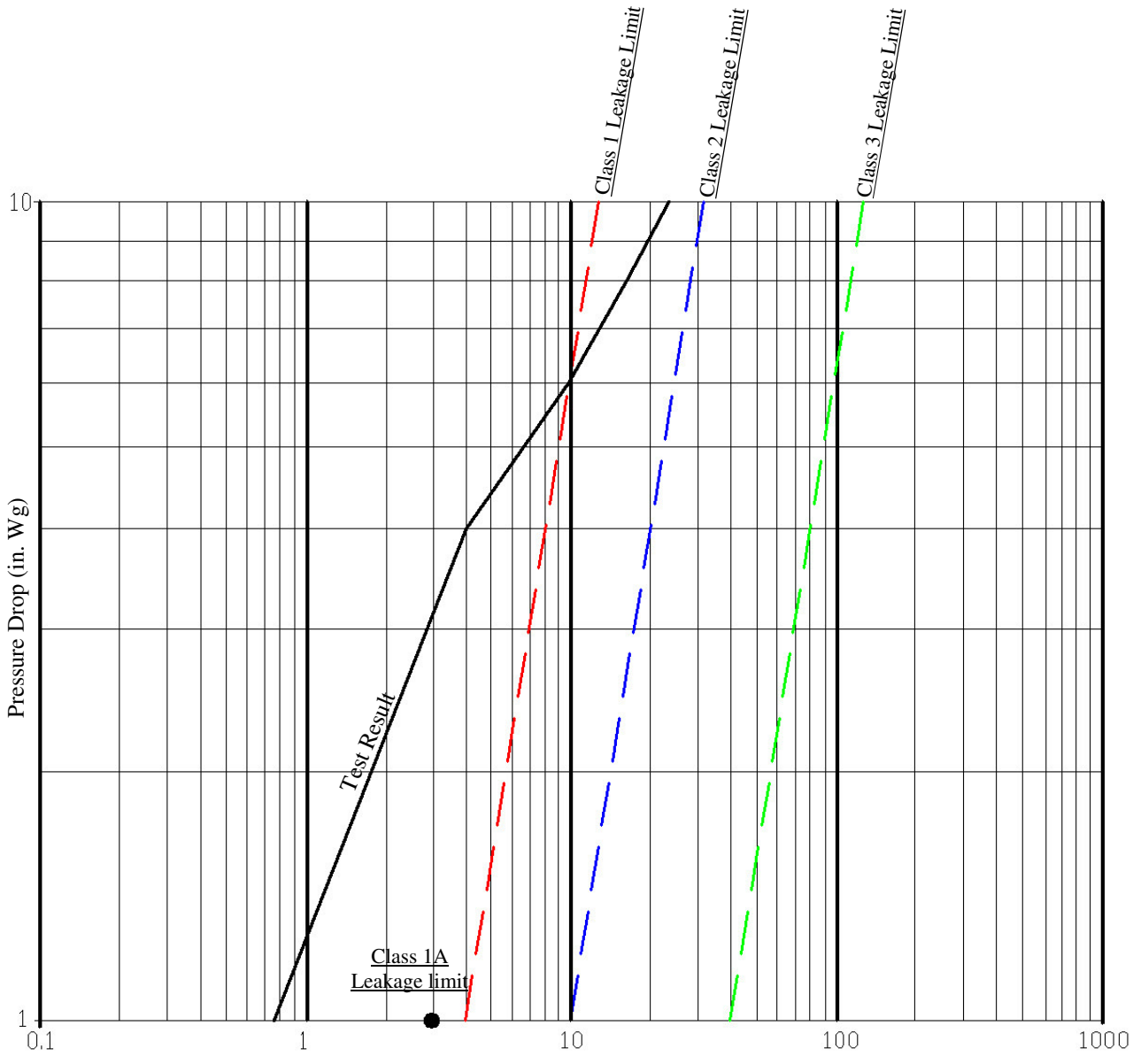


| AC10AF/AC20AF | Leakage Class | | |
|---|---|---|---|
| Damper Width | 1 in. Wg | 4 in. Wg | 6 in. Wg |
| 48" | 1A | 1 | 1 |

Torque: 9.0 in.lb/sq.ft applied to close and seat the damper.

Lloyd Industries certifies that the AC10-AF and AC20-AF herein are licensed to bear the AMCA Seal. The ratings shown are based on the tests and procedures performed in accordance with AMCA publication 511 and comply with the requirements of the AMCA Certified Ratings Program. The AMCA International Certified Rating Seal applies to Air Performance and Air Leakage.

231 Commerce Dr. Montgomeryville, PA 18936
Tel: 215-412-4445 Fax: 215-412-4409
Email: lloydind@firedamper.com

138 Industrial Loop West, Orange Park, FL 32073
Tel: 904-541-1655 Fax: 904-541-1657
Email: lloydind1@firedamper.com

B1, 4/F., Luen Ming Hing Factory Building
36 Mok Cheong St.,
To Kwa Wan, Kowloon, H. K.
Tel: 852-2760-4188 Fax: 852-2760-4177
Email: tatanlexyim@lloydasia.com

Website: www.firedamper.com

*ALL STATED SPECIFICATIONS ARE SUBJECT TO UPDATE WITHOUT NOTICE OR OBLIGATION.



Lloyd Industries Inc. 2017

# SLEEVES AIR CONTROL DAMPERS

## SLEEVE TRANSITION DIMENSIONAL INFORMATION

### STANDARD SLEEVES

Air Control dampers can be supplied with factory mounted type “A “ sleeves for standard system ducting unless otherwise specified.

Standard “A” sleeve ordering information:

**To determine the standard sleeve length**

1. Establish damper width x height.
2. Determine the actuator type, model, and mounting type.
3. Establish the minimum actuator mounting distance from the mounting diagrams.
4. Determine the sleeve distance “M” opposite to the actuator side of the damper.
5. Add the actuator mounting distance to the “M” distance and the 5.00” damper thickness.
6. Integral flanges 1-1/2” wide can be provided on sleeves when specified.

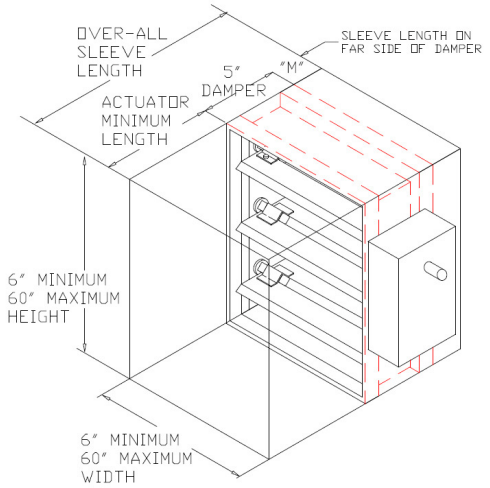


Standard sleeve
Type “A”

### SLEEVE TRANSITIONS

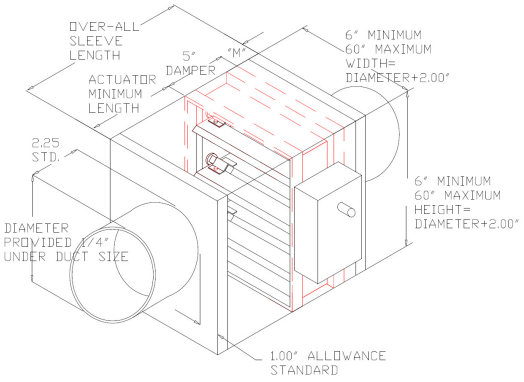


Type “CR”- Round
Specify the round ducting diameter.
( The actual damper frame will be +2.00”W x +2.00H)

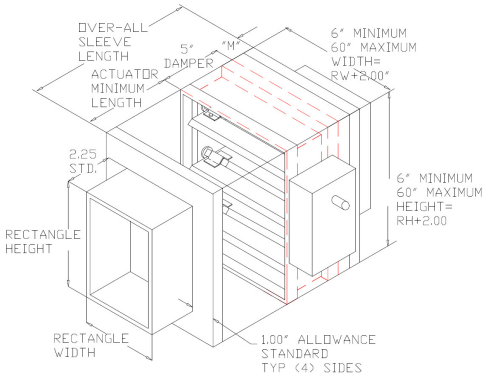


Type “C”- Rectangle
Specify the rectangle width x rectangle height
( The actual damper frame will be +2.00”W x +2.00H)

Air control dampers can be supplied with factory mounted sleeves to transition to round, square, rectangular, oval, or special system ducting.
For sleeve length:
Use the standard “A” sleeve length calculation

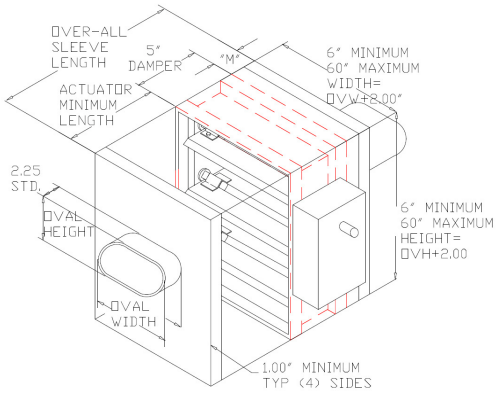


Type “CO”- Oval
Specify the oval width x oval height
( The actual damper frame will be +2.00”W x +2.00H)

When ordering specify:
W x H x L x Gauge.
And distance “M” when “M” is not specified dampers will be centered in sleeve.

231 Commerce Dr. Montgomeryville, PA 18936
Tel: 215-412-4445 Fax: 215-412-4409
Email: lloydind@firedamper.com

138 Industrial Loop West, Orange Park, FL 32073
Tel: 904-541-1655 Fax: 904-541-1657
Email: lloydind1@firedamper.com

B1, 4/F., Luen Ming Hing Factory Building
36 Mok Cheong St.,
To Kwa Wan, Kowloon, H. K.
Tel: 852-2760-4188 Fax: 852-2760-4177
Email: tatanlexyim@lloydasia.com

Website: www.firedamper.com

*ALL STATED SPECIFICATIONS ARE SUBJECT TO UPDATE WITHOUT NOTICE OR OBLIGATION.



Lloyd Industries Inc. 2017

# LLOYD INDUSTRIES INC.

WWW.FIREDAMPER.COM

## AIR CONTROL DAMPER




**MODELS:**
**AC-30**
**(SINGLE BLADE SPIRAL DUCT ROUND BALANCING DAMPER)**

### APPLICATION

Model AC30 is a low leakage round control damper that easily installs in round ductwork. It is designed for use in low to medium pressure and velocity commercial HVAC systems. The damper can be used as a manual balancing hand locking quadrant, an extended mount Quadrant, or using a variety of electric/pneumatic actuators.

### STANDARD CONSTRUCTION

| | |
|---|---|
| FRAME: | 6" Deep 22/20 Ga. galvanized steel |
| | roll formed and welded double beaded |
| | for rigidity and spiral duct connections |
| BLADES: | Single blade |
| | 16 Ga. galvanized |
| | single "V" formed stiffener |
| SEALS: | Low leakage closed cell neoprene |
| BEARINGS: | Non-metallic celcon |
| AXLES: | 1/2 Sq zinc plated steel stud |
| FINISH: | Mill galvanized |

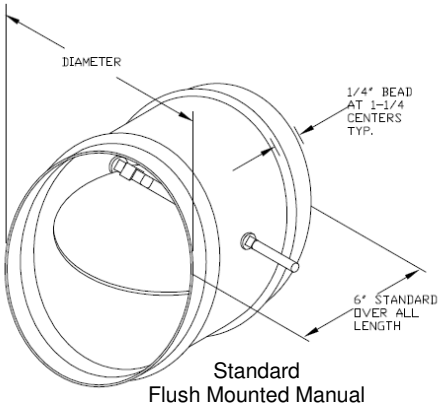


Standard
Flush Mounted Manual
Operating Quadrant

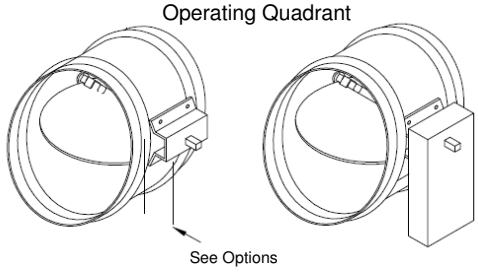


Optional Extended Mount Quadrant

Optional Mounted Actuators

### STANDARD EXTENDED SHAFT:

1/2 inch square x 3" long zinc plated steel shaft extending 1" beyond the air control frame.

### OPTIONS

Extended Mount:
- 1-1/4" Quadrant standoff with 6" shaft
- 2-1/4" Quadrant standoff with 6" shaft

Motorized:
- 120 VAC or 24VAC
- 20 PSI with 1-1/4" or 2-1/4" standoff, and 8" shaft

Bronze bearings
Stainless steel construction

### SIZING:

Damper supplied:
Order diameter less 1/4"

SINGLE SECTION SIZE AVAILABILITY

| | DIAMETER |
|---|---|
| MINIMUM | 4" |
| MAXIMUM | 24" |

231 Commerce Dr. Montgomeryville, PA 18936
Tel: 215-412-4445 Fax: 215-412-4409
Email: lloydind@firedamper.com

138 Industrial Loop West, Orange Park, FL 32073
Tel: 904-541-1655 Fax: 904-541-1657
Email: lloydind1@firedamper.com

B1, 4/F., Luen Ming Hing Factory Building
36 Mok Cheong St.,
To Kwa Wan, Kowloon, H. K.
Tel: 852-2760-4188 Fax: 852-2760-4177
Email: tatanlexyim@lloydasia.com

Website: www.firedamper.com

*ALL STATED SPECIFICATIONS ARE SUBJECT TO UPDATE WITHOUT NOTICE OR OBLIGATION.



Lloyd Industries Inc. 2017

# LLOYD INDUSTRIES INC.

WWW.FIREDAMPER.COM

## AIR CONTROL DAMPER



**MODELS:**
**AC-40**
**(SINGLE BLADE ROUND CONTROL DAMPER)**

### APPLICATION

Model AC40 is a low leakage round control damper that easily installs in round ductwork. It is designed for use in low to medium pressure and velocity commercial HVAC systems. The damper can be used as a manual balancing hand locking quadrant, an extended mount Quadrant, or using a variety of electric/pneumatic actuators.

### STANDARD CONSTRUCTION

| | |
|---|---|
| FRAME: | 4" Deep 16 Ga. galvanized steel |
| | roll formed and welded |
| BLADES: | Single blade |
| | 16 Ga. galvanized |
| | Single "V" formed stiffener |
| SEALS: | Low leakage closed cell neoprene |
| BEARINGS: | Non-metallic celcon |
| AXLES: | 1/2 Sq zinc plated steel stud |
| FINISH: | Mill galvanized |

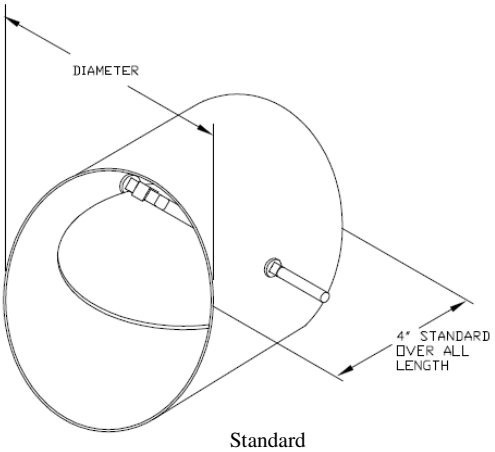


Standard
Flush Mounted Manual
Operating Quadrant

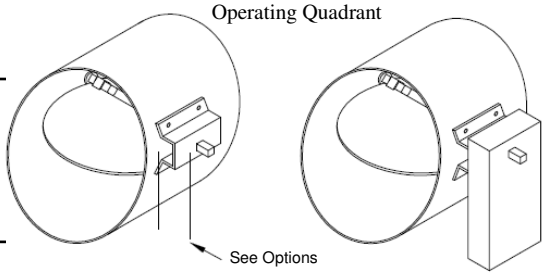


Optional Extended
Mount Quadrant

Optional Mounted
Actuators

### STANDARD EXTENDED SHAFT:

1/2 inch square x 3" long zinc plated steel shaft extending 1" beyond the air control frame.

### OPTIONS

Extended Mount:
- 1-1/4" Quadrant standoff with 6" shaft
- 2-1/4" Quadrant standoff with 6" shaft

Motorized:
- 120 VAC or 24VAC
- 20 PSI with 1-1/4" or 2-1/4" standoff, and 8" shaft

Bronze bearings
Stainless steel construction

### SIZING:

Damper supplied:
Order diameter less 1/4"

SINGLE SECTION SIZE AVAILABILITY

| | DIAMETER |
|---|---|
| MINIMUM | 4" |
| MAXIMUM | 24" |

231 Commerce Dr. Montgomeryville, PA 18936
Tel: 215-412-4445 Fax: 215-412-4409
Email: lloydind@firedamper.com

138 Industrial Loop West, Orange Park, FL 32073
Tel: 904-541-1655 Fax: 904-541-1657
Email: lloydind1@firedamper.com

B1, 4/F., Luen Ming Hing Factory Building
36 Mok Cheong St.,
To Kwa Wan, Kowloon, H. K.
Tel: 852-2760-4188 Fax: 852-2760-4177
Email: tatanlexyim@lloydasia.com

Website: www.firedamper.com

*ALL STATED SPECIFICATIONS ARE SUBJECT TO UPDATE WITHOUT NOTICE OR OBLIGATION.



Lloyd Industries Inc. 2017

# LLOYD INDUSTRIES INC.

WWW.FIREDAMPER.COM

## CEILING RADIATION DAMPER



**MODEL:**
**50 (Rectangular)**

### APPLICATION

The CRD-50 has been UL tested and labeled for protection of ceiling openings in fire rated floor/ceiling assemblies with fire resistance ratings of up to 3 hours . This product can also be applied to steel lay-in style ceiling diffusers up to 24 in. x 24 in. (610mm x 610mm) maximum size. The damper is UL fire rated for Ceiling/Floor and Ceiling/Roof Assemblies L528, L558, L562, L563, L574, L585, P533, P544, P545 and P547. Please consult factory for use in other floor/ceiling and roof/ceiling designs.

### RATING:

**UL CLASSIFIED**: UL 555C Fire Resistance Rating
Fire resistance rated 3 Hours
Building materials rated 3 Hours

Model CRD 50 meets the requirements for fire dampers established by:
**CSFM California State Fire Marshal**
**Fire Damper Listing (#3225-1417:101)**

### Standard Construction

1. UL listed link (165°F or 212°F)
2. Blades 22 (0.853mm) Ga. galvanized steel
3. Ceramic fiber with fiberglass cover*
4. Roll-formed frame 22 (0.853mm) Ga. galvanized steel
5. Steel duct drop (by others).

### Note:

1. Maximum size 24"x24" (600mm x 600mm)
   Minimum size 4"x4"(101mm x 101mm)
2. Available in stainless steel
3. Manufactured with blade opening as per sketch #1: when "W" equal to or greater than 6"
4. Manufactured with blade opening as per sketch #2: when "W" is less than 6" and "H" is greater than "W".
5. *Ceramic insulation is not UL required on dampers with areas less than 80 square inches of blade surface. Dampers above 80 square inches will be provided with blade insulation.

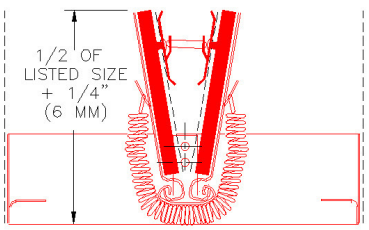


CRD SHOWN IN OPEN POSITION

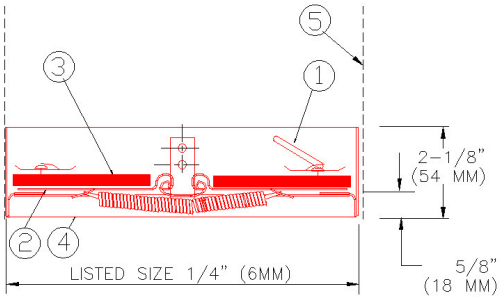


CRD SHOWN IN CLOSED POSITION

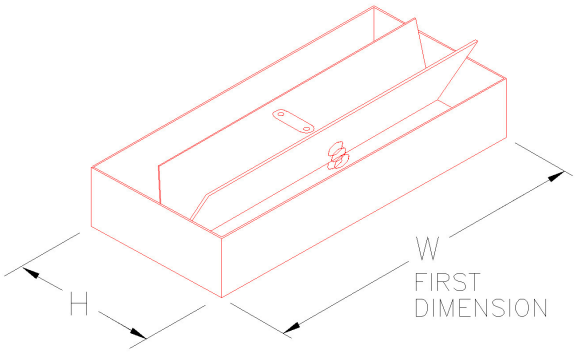


SKETCH 1

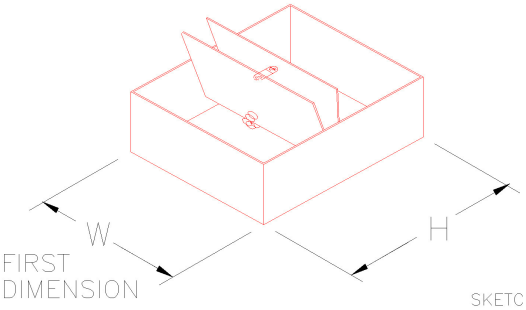


SKETCH 2

Note:
First dimension is always the hinge length
Example:
A 12x6 CRD 50-EA has a 12"(W) long hinged length

231 Commerce Dr. Montgomeryville, PA 18936
Tel: 215-412-4445 Fax: 215-412-4409
Email: lloydind@firedamper.com

138 Industrial Loop West, Orange Park, FL 32073
Tel: 904-541-1655 Fax: 904-541-1657
Email: lloydind1@firedamper.com

B1, 4/F., Luen Ming Hing Factory Building
36 Mok Cheong St.,
To Kwa Wan, Kowloon, H. K.
Tel: 852-2760-4188 Fax: 852-2760-4177
Email: tatanlexyim@lloydasia.com

Website: www.firedamper.com

*ALL STATED SPECIFICATIONS ARE SUBJECT TO UPDATE WITHOUT NOTICE OR OBLIGATION.



Lloyd Industries Inc. 2017

# LLOYD INDUSTRIES INC.

WWW.FIREDAMPER.COM

## CEILING RADIATION DAMPER

**MODEL:**
**50EA (Rectangular)**

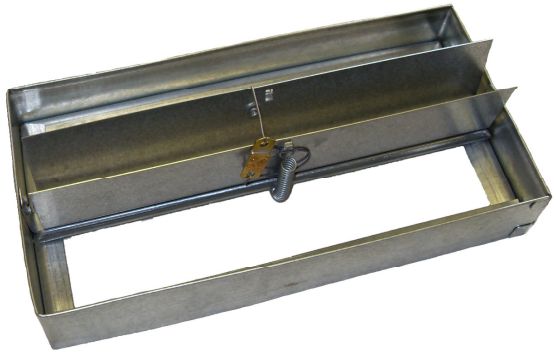

### APPLICATION

The CRD-50EA has been UL tested and labeled for protection of ceiling openings in fire rated floor/ceiling assemblies with fire resistance ratings of up to 3 hours. This product can also be applied to steel lay-in style ceiling diffusers up to 24 in. x 24 in. (610mm x 610mm) maximum size. The damper is UL fire rated for Ceiling/Floor and Ceiling/Roof Assemblies L528, L558, L562, L563, L574, L585, P533, P544, P545 and P547. Please consult factory for use in other floor/ceiling and roof/ceiling designs.

### Standard Construction

1. UL listed link (165°F or 212°F)
2. Blades 22 (0.853mm) Ga. galvanized steel
3. Ceramic fiber with fiberglass cover*
4. Roll-formed frame 22 (0.853mm) Ga. galvanized steel
5. Steel duct drop (by others).

### RATING:

**UL CLASSIFIED**: UL 555C Fire Resistance Rating
Fire resistance rated 3 Hours
Building materials rated 3 Hours

Model CRD 50EA meets the requirements for fire
dampers established by:
**CSFM California State Fire Marshal**

### Note:

1. Maximum size 24”x24” (600mm x 600mm)
   Minimum size 4”x6”(101mm x 152mm)
2. Manufactured with blade opening as per sketch #1: when “W” equal to or greater than 6”
3. Manufactured with blade opening as per sketch #2: when “W” is less than 6” and “H” is greater than “W”.
4. *Ceramic insulation is not UL required on dampers with areas less than 80 square inches and is optional. Dampers above 80 square inches will be provided with blade insulation.

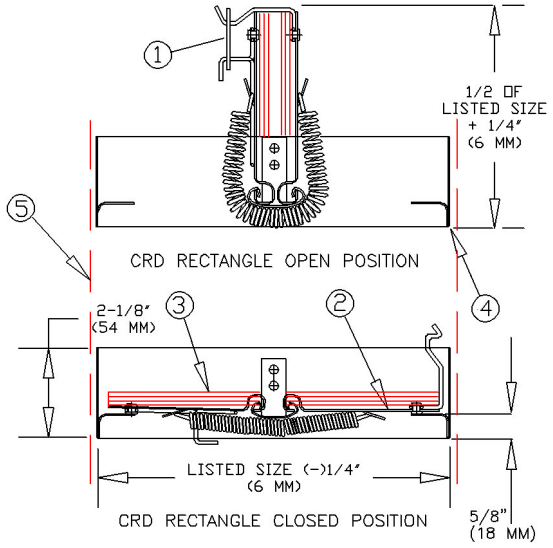


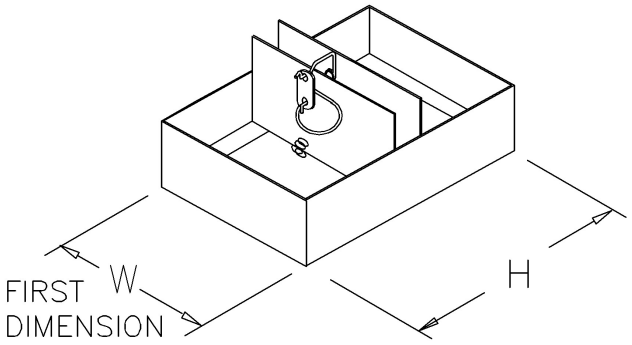


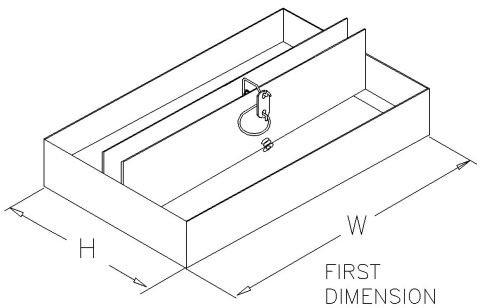


SKETCH 1

Note:
First dimension is always the hinge length
Example:
A 12x6 CRD 50-EA has a 12”(W) long hinged length

231 Commerce Dr. Montgomeryville, PA 18936
Tel: 215-412-4445 Fax: 215-412-4409
Email: lloydind@firedamper.com

138 Industrial Loop West, Orange Park, FL 32073
Tel: 904-541-1655 Fax: 904-541-1657
Email: lloydind1@firedamper.com

B1, 4/F., Luen Ming Hing Factory Building
36 Mok Cheong St.,
To Kwa Wan, Kowloon, H. K.
Tel: 852-2760-4188 Fax: 852-2760-4177
Email: tatanlexyim@lloydasia.com

Website: www.firedamper.com

*ALL STATED SPECIFICATIONS ARE SUBJECT TO UPDATE WITHOUT NOTICE OR OBLIGATION.



Lloyd Industries Inc. 2017

# LLOYD INDUSTRIES INC.

WWW.FIREDAMPER.COM

## CEILING RADIATION DAMPER

**MODEL:**
**55 (Round)**



### APPLICATION

The CRD-55 has been UL tested and labeled for protection of ceiling openings in fire rated floor/ceiling assemblies with fire resistance ratings of up to 3 hours. This product can also be applied to steel lay-in style ceiling diffusers up to 24" Dia. (610mm) maximum size. The damper is UL fire rated for Ceiling/Floor and Ceiling/Roof Assemblies L528, L558, L562, L563, L574, L585, P533, P544, P545 and P547. Please consult factory for use in other floor/ceiling and roof/ceiling designs.

### Standard Construction

1. UL listed link (165°F or 212°F)
2. Blades 22 (0.853mm) Ga. galvanized steel
3. Ceramic fiber with fiberglass cover*
4. Roll-formed frame 22 (0.853mm) Ga. galvanized steel
5. Steel duct drop (by others).

### Note:

1. Maximum size 24" Dia. (600mm)
   Minimum size 4" Dia. (100mm)
2. Available in stainless steel
3. *Ceramic insulation is not UL required on dampers with areas less than 80 square inches and is optional. Dampers above 80 square inches will be provided with blade insulation.

### RATING:

**UL CLASSIFIED**: UL 555C Fire Resistance Rating
Fire resistance rated 3 Hours
Building materials rated 3 Hours

Model CRD 55 meets the requirements for fire dampers established by:
**CSFM California State Fire Marshal**
**Fire Damper Listing (#3225-1417:101)**

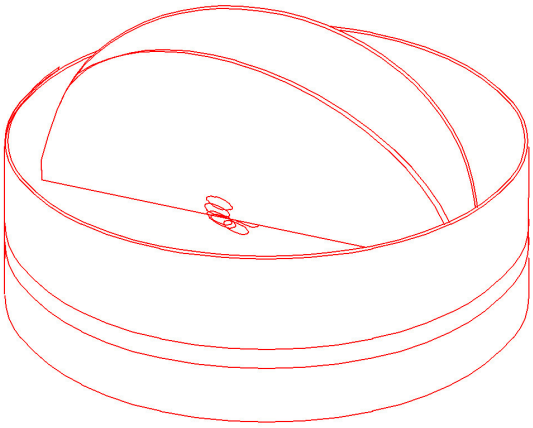

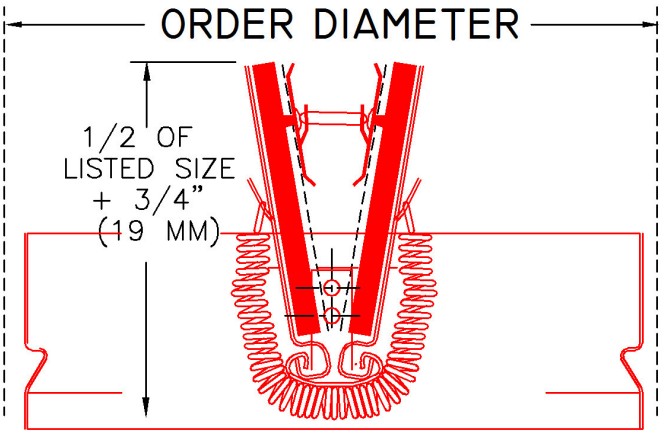


CRD SHOWN IN OPEN POSITION

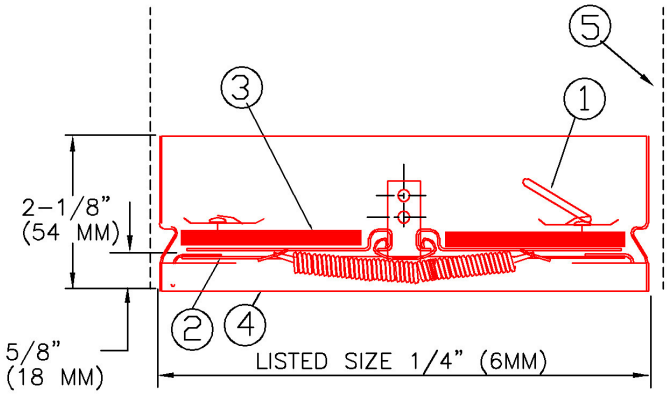


CRD SHOWN IN CLOSED POSITION

231 Commerce Dr. Montgomeryville, PA 18936
Tel: 215-412-4445 Fax: 215-412-4409
Email: lloydind@firedamper.com

138 Industrial Loop West, Orange Park, FL 32073
Tel: 904-541-1655 Fax: 904-541-1657
Email: lloydind1@firedamper.com

B1, 4/F., Luen Ming Hing Factory Building
36 Mok Cheong St.,
To Kwa Wan, Kowloon, H. K.
Tel: 852-2760-4188 Fax: 852-2760-4177
Email: tatanlexyim@lloydasia.com

Website: www.firedamper.com

*ALL STATED SPECIFICATIONS ARE SUBJECT TO UPDATE WITHOUT NOTICE OR OBLIGATION.



Lloyd Industries Inc. 2017

# LLOYD INDUSTRIES INC.

WWW.FIREDAMPER.COM

## CEILING RADIATION DAMPER

**MODEL:**
**55 EA (Round)**



### Standard Construction

1. UL listed link (165°F or 212°F)
2. Blades 22 (0.853mm) Ga. galvanized steel
3. Ceramic fiber with fiberglass cover*
4. Roll-formed frame 22 (0.853mm) Ga. galvanized steel
5. Steel duct drop (by others).

### Note:

1. Maximum size 24" Dia. (600mm)
   Minimum size 5" Dia. (127mm)
2. Available in stainless steel
3. "Ceramic insulation is not UL required on dampers with areas less than 80 square inches and is optional. Dampers above 80 square inches will be provided with blade insulation.

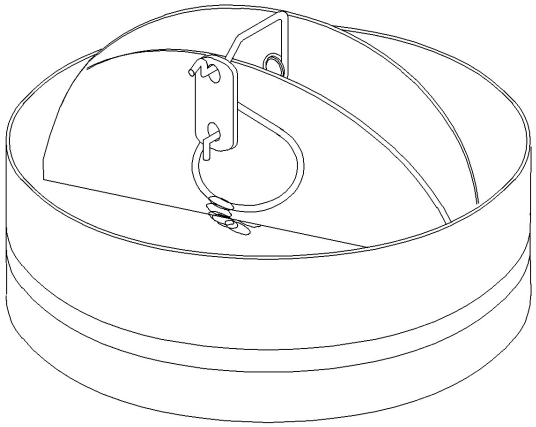

### APPLICATION

The CRD-55EA has been UL tested and labeled for protection of ceiling openings in fire rated floor/ceiling assemblies with fire resistance ratings of up to 3 hours. This product can also be applied to steel lay-in style ceiling diffusers up to 24" Dia. (610mm) maximum size. The damper is UL fire rated for Ceiling/Floor and Ceiling/ Roof Assemblies L528, L558, L562, L563, L574, L585, P533, P544, P545 and P547. Please consult factory for use in other floor/ceiling and roof/ceiling designs.

### RATING:

**UL CLASSIFIED**: UL 555C Fire Resistance Rating
Fire resistance rated 3 Hours
Building materials rated 3 Hours

Model CRD 55EA meets the requirements for fire dampers established by:
**CSFM California State Fire Marshal**
**Fire Damper Listing (#3225-1417:101)**

CRD ROUND OPEN POSITION

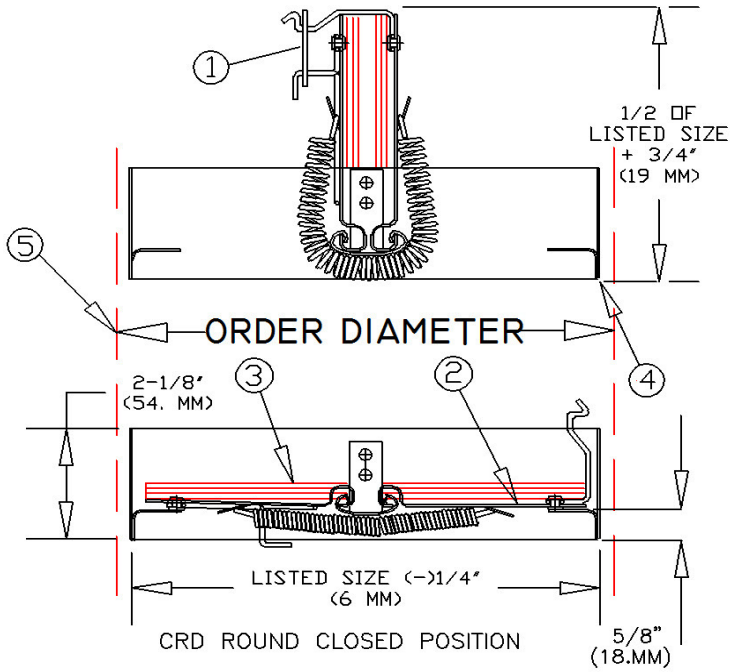



231 Commerce Dr. Montgomeryville, PA 18936
Tel: 215-412-4445 Fax: 215-412-4409
Email: lloydind@firedamper.com

138 Industrial Loop West, Orange Park, FL 32073
Tel: 904-541-1655 Fax: 904-541-1657
Email: lloydind1@firedamper.com

B1, 4/F., Luen Ming Hing Factory Building
36 Mok Cheong St.,
To Kwa Wan, Kowloon, H. K.
Tel: 852-2760-4188 Fax: 852-2760-4177
Email: tatanlexyim@lloydasia.com

Website: www.firedamper.com



*ALL STATED SPECIFICATIONS ARE SUBJECT TO UPDATE WITHOUT NOTICE OR OBLIGATION.





Lloyd Industries Inc. 2017

# LLOYD INDUSTRIES INC.

WWW.FIREDAMPER.COM

## CEILING RADIATION DAMPER

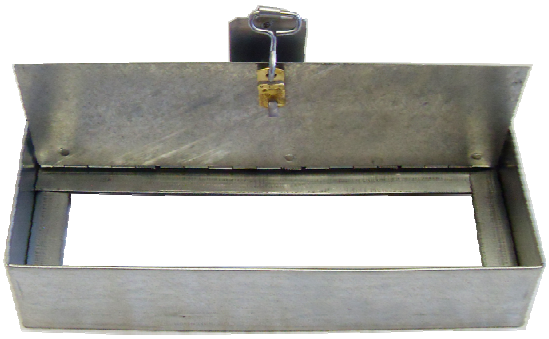

**MODEL:**
**50-4X (Rectangular)**

### APPLICATION

The CRD-50-4X has been UL tested and labeled for protection of ceiling openings in fire rated floor/ceiling assemblies with fire resistance ratings up to of 3 hours. This product can also be applied to steel lay-in style ceiling diffusers up to 4"x24" maximum size. The damper is UL fire rated for Ceiling/Floor and Ceiling/Roof Assemblies L558, L562, L563, L574, L585, P533, P544, P545 and P547. Please consult factory for use in other floor/ceiling and roof/ceiling designs.

### Standard Construction

1. UL listed link (165°F standard)(max 212°F)
2. Blades 22 (0.853mm) Ga. galvanized steel
3. Roll-formed frame 22 (0.853mm) Ga. galvanized steel
4. Steel duct drop (by others).

### RATING:

**UL CLASSIFIED**: UL 555C Fire Resistance Rating
Fire resistance rated 3 Hours
Building materials rated 3 Hours

Model CRD 50-4X meets the requirements for fire dampers established by:
**CSFM California State Fire Marshal Fire Damper Listing (#3225-1417:101)**

### Note:

1. Maximum size 4"x24"
   Minimum size 4"x4"
2. "Ceramic insulation is not UL required on Lloyd Industries dampers with area less than 80 square inches.

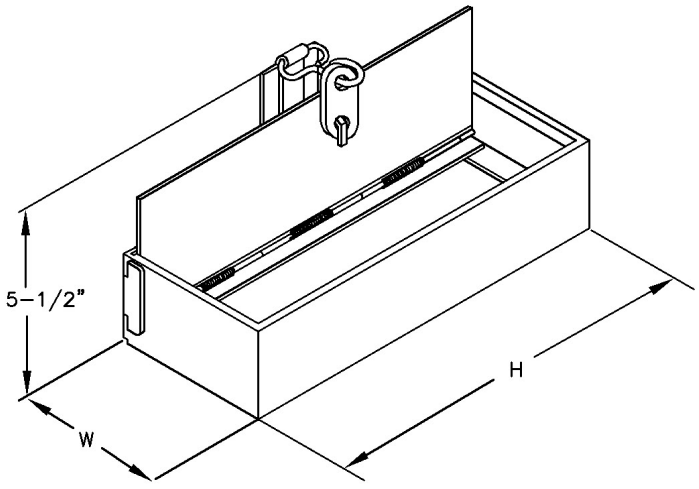


MODEL CRD50-4X
SINGLE BLADE DAMPER

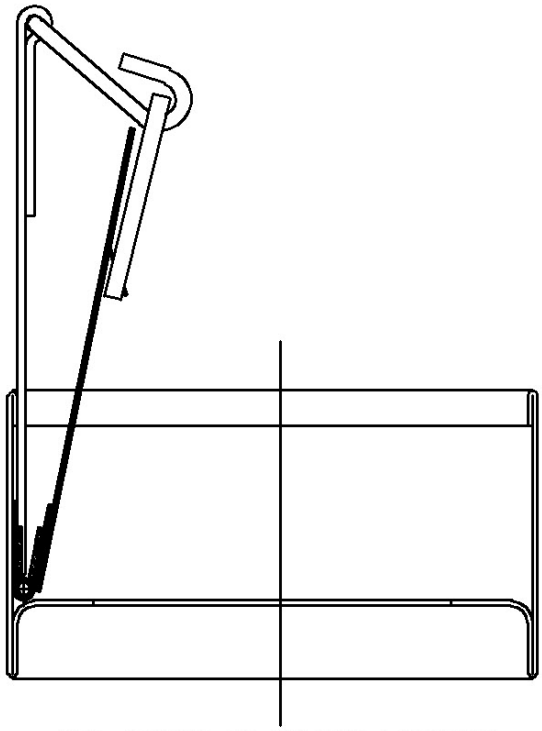

CRD SHOWN IN OPENED POSITION

231 Commerce Dr. Montgomeryville, PA 18936
Tel: 215-412-4445 Fax: 215-412-4409
Email: lloydind@firedamper.com

138 Industrial Loop West, Orange Park, FL 32073
Tel: 904-541-1655 Fax: 904-541-1657
Email: lloydind1@firedamper.com

B1, 4/F., Luen Ming Hing Factory Building
36 Mok Cheong St.,
To Kwa Wan, Kowloon, H. K.
Tel: 852-2760-4188 Fax: 852-2760-4177
Email: tatanlexyim@lloydasia.com

Website: www.firedamper.com

*ALL STATED SPECIFICATIONS ARE SUBJECT TO UPDATE WITHOUT NOTICE OR OBLIGATION.



Lloyd Industries Inc. 2017

# LLOYD INDUSTRIES INC.

WWW.FIREDAMPER.COM

## CEILING RADIATION DAMPER

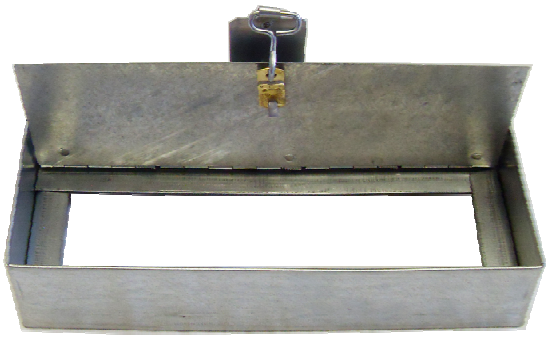

**MODEL:**
**50-6X (Rectangular)**

### APPLICATION

The CRD-50-6X has been UL tested and labeled for protection of ceiling openings in fire rated floor/ceiling assemblies with fire resistance ratings of up to 3 hours. This product can also be applied to steel lay-in style ceiling diffusers up to 6"x24" maximum size. The damper is UL fire rated for Ceiling/Floor and Ceiling/Roof Assemblies L558, L562, L563, L574, L585, P533, P544, P545 and P547. Please consult factory for use in other floor/ceiling and roof/ceiling designs.

### Standard Construction

1. UL listed link (165°F standard)(Max 212°F)
2. Blades 22 (0.853mm) Ga. galvanized steel
3. Roll-formed frame 22 (0.853mm) Ga. galvanized steel
4. Steel duct drop (by others).
5. 90% Free area

### RATING:

**UL CLASSIFIED**: UL 555C Fire Resistance Rating
Fire resistance rated 3 Hours
Building materials rated 3 Hours

Model CRD 50-6X meets the requirements for fire dampers established by:
**CSFM California State Fire Marshal Fire Damper Listing (#3225-1417:101)**

### Note:

1. Maximum size 6"x24"
   Minimum size 6"x4"
2. "Ceramic insulation is not UL required on Lloyd Industries dampers with area less than 80 square inches of blade surface

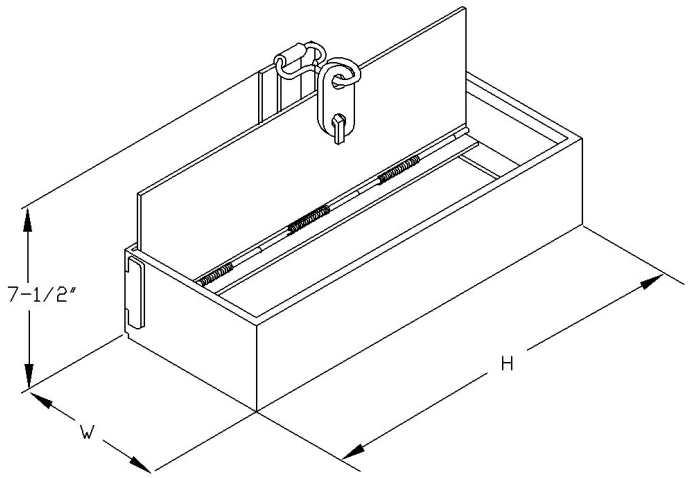


MODEL CRD50-6X
SINGLE BLADE DAMPER

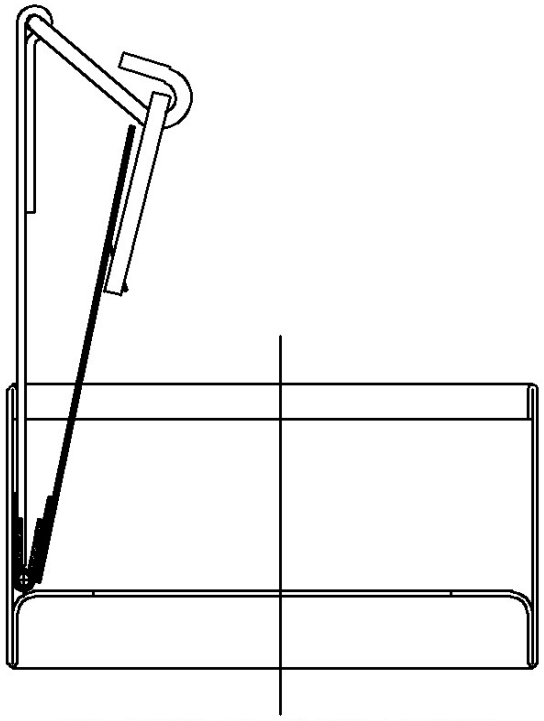

CRD SHOWN IN OPENED POSITION

231 Commerce Dr. Montgomeryville, PA 18936
Tel: 215-412-4445 Fax: 215-412-4409
Email: lloydind@firedamper.com

138 Industrial Loop West, Orange Park, FL 32073
Tel: 904-541-1655 Fax: 904-541-1657
Email: lloydind1@firedamper.com

B1, 4/F., Luen Ming Hing Factory Building
36 Mok Cheong St.,
To Kwa Wan, Kowloon, H. K.
Tel: 852-2760-4188 Fax: 852-2760-4177
Email: tatanlexyim@lloydasia.com

Website: www.firedamper.com

*ALL STATED SPECIFICATIONS ARE SUBJECT TO UPDATE WITHOUT NOTICE OR OBLIGATION.



Lloyd Industries Inc. 2017

# LLOYD INDUSTRIES INC.

WWW.FIREDAMPER.COM

## CEILING RADIATION DAMPER



**MODEL:**
**45-LT**

### APPLICATION

The CRD-45-LT has been UL tested and labeled for protection of ceiling openings in fire rated floor/ceiling assemblies with fire resistance ratings of up to 3 hours. This product can also be applied to steel lay-in style ceiling diffusers up to 14”x14” maximum size. The damper is UL fire rated for Ceiling/Floor and Ceiling/Roof Assemblies L558, L562, L563, L574, L585, P533, P544, P545 and P547. Please consult factory for use in other floor/ceiling and roof/ceiling designs.

### Standard Construction

1. UL listed link (165°F standard)(Max 212°F)
2. Blades 22 (0.853mm) Ga. galvanized steel
3. Roll-formed frame 22 (0.853mm) Ga. galvanized steel
4. Steel duct drop (by others).

### RATING:

**UL CLASSIFIED**: UL 555C Fire Resistance Rating
Fire resistance rated 3 Hours
Building materials rated 3 Hours

Model CRD 45-LT meets the requirements for fire dampers established by:
**CSFM California State Fire Marshal**
**Fire Damper Listing (#3225-1417:101)**

| | Single Section | |
|---|---|---|
| | Width | Height |
| Minimum | 4” | 4” |
| Maximum | 14” | 14” |

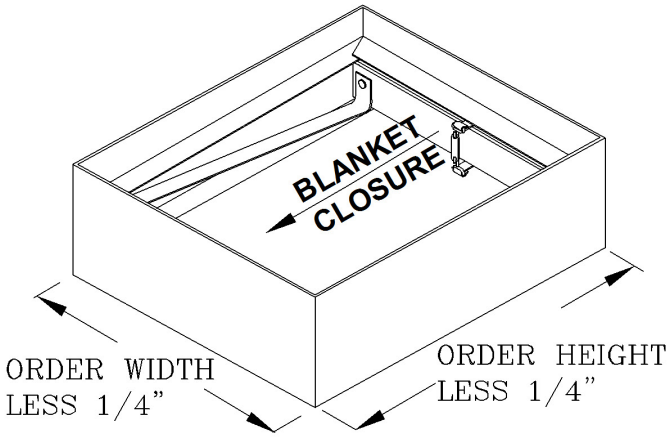


Model 45-LT

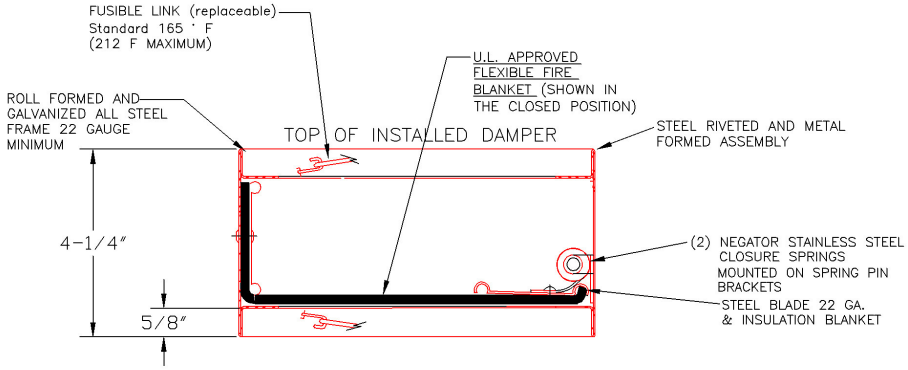


HORIZONTAL MOUNTING

231 Commerce Dr. Montgomeryville, PA 18936
Tel: 215-412-4445 Fax: 215-412-4409
Email: lloydind@firedamper.com

138 Industrial Loop West, Orange Park, FL 32073
Tel: 904-541-1655 Fax: 904-541-1657
Email: lloydind1@firedamper.com

B1, 4/F., Luen Ming Hing Factory Building
36 Mok Cheong St.,
To Kwa Wan, Kowloon, H. K.
Tel: 852-2760-4188 Fax: 852-2760-4177
Email: tatanlexyim@lloydasia.com

Website: www.firedamper.com

*ALL STATED SPECIFICATIONS ARE SUBJECT TO UPDATE WITHOUT NOTICE OR OBLIGATION.



Lloyd Industries Inc. 2017

# LLOYD INDUSTRIES INC.

WWW.FIREDAMPER.COM

# CEILING RADIATION DAMPER

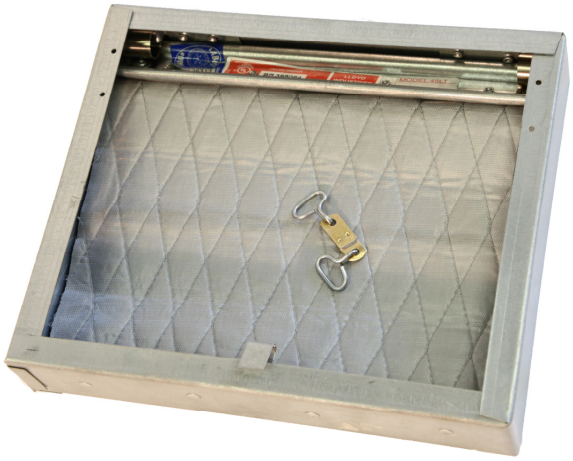

**MODEL:**
**45-LTD (Thin Line)**

## APPLICATION

The CRD-45-LTD has been UL tested and labeled for protection of ceiling openings in fire rated floor/ceiling assemblies with fire resistance ratings of up to 3 hours. This product can also be applied to steel lay-in style ceiling diffusers up to 14”x14” maximum size. The damper is UL fire rated for Ceiling/Floor and Ceiling/ Roof Assemblies L558, L562, L563, L574, L585, P533, P544, P545 and P547. Please consult factory for use in other floor/ceiling and roof/ceiling designs.

## RATING:

**UL CLASSIFIED**: UL 555C Fire Resistance Rating
Fire resistance rated 3 Hours
Building materials rated 3 Hours

## Standard Construction

1. UL listed link (165°F standard)(Max 212°F)
2. Blades 22 (0.853mm) Ga. galvanized steel
3. Roll-formed frame 22 (0.853mm) Ga. galvanized steel
4. Steel duct drop (by others).

Model CRD 45-LTD meets the requirements for fire dampers established by:
**CSFM California State Fire Marshal**
**Fire Damper Listing (#3225-1417:101)**

| | Single Section | |
|---|---|---|
| | Width | Height |
| Minimum | 4” | 4” |
| Maximum | 14” | 14” |

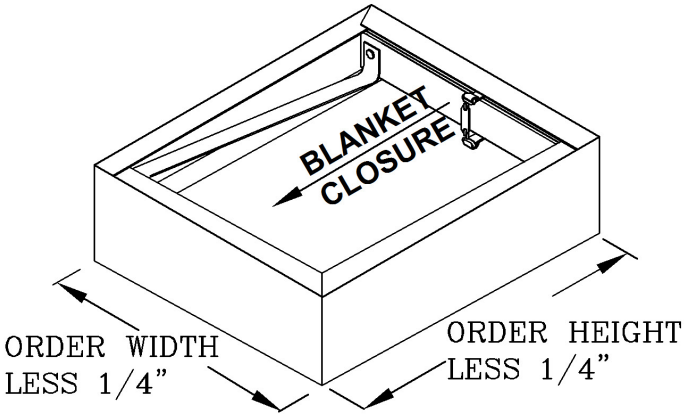


Model 45–LTD

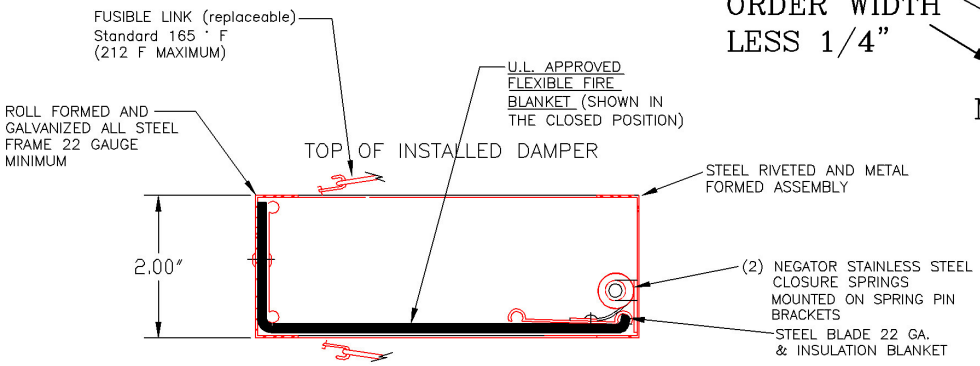


231 Commerce Dr. Montgomeryville, PA 18936
Tel: 215-412-4445 Fax: 215-412-4409
Email: lloydind@firedamper.com

138 Industrial Loop West, Orange Park, FL 32073
Tel: 904-541-1655 Fax: 904-541-1657
Email: lloydind1@firedamper.com

B1, 4/F., Luen Ming Hing Factory Building
36 Mok Cheong St.,
To Kwa Wan, Kowloon, H. K.
Tel: 852-2760-4188 Fax: 852-2760-4177
Email: tatanlexyim@lloydasia.com

Website: www.firedamper.com

*ALL STATED SPECIFICATIONS ARE SUBJECT TO UPDATE WITHOUT NOTICE OR OBLIGATION.



Lloyd Industries Inc. 2017

# LLOYD INDUSTRIES INC.

WWW.FIREDAMPER.COM

## CEILING RADIATION DAMPER FOR "BOOT CLIP" INSTALLATIONS

**MODEL:**
**I-CRD50**
**I-CRD50-EA**

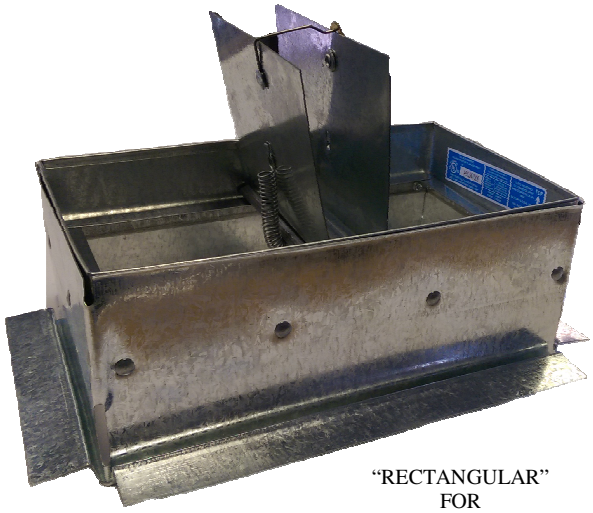

"RECTANGULAR" FOR INSTALLATIONS

**APPLICATION**

Model I-CRD50/ I-CRD50-EA is an 1-Hour rated ceiling radiation damper with sleeve. The damper is UL fire rated for Ceiling/Floor and Ceiling/Roof Assemblies L528, L558, L562, L563, L574, L585, P533, P544, P545 and P547. Please consult factory for use in other floor/ceiling and roof/ceiling designs.

***NEW RELEASES!***

Model I-CRD5-/I-CRD50-EA is a CRD with 26gauge **ONE PIECE ROLL FORMED SLEEVE.** It saves time and money by just sliding in and attaching by spot welds/ rivets. Measurement are not required.

**CEILING RADIATION DAMPER**

- Fusible Link: 165°F standard (optional: 212°F )
- Blades: 22 Ga. (0.853mm) Galv. Steel
- Frame: Roll formed 22 Ga. Galv. Steel
- Sleeves: **26 Ga. one piece roll formed**

INSTALLATION INSTRUCTIONS AND THE PRODUCTS SPECIFIED, ARE IN CONFORMANCE TO ALL OF UNDERWRITERS LABORATORIES REQUIREMENTS 555C

Meets NFPA 90A Requirements

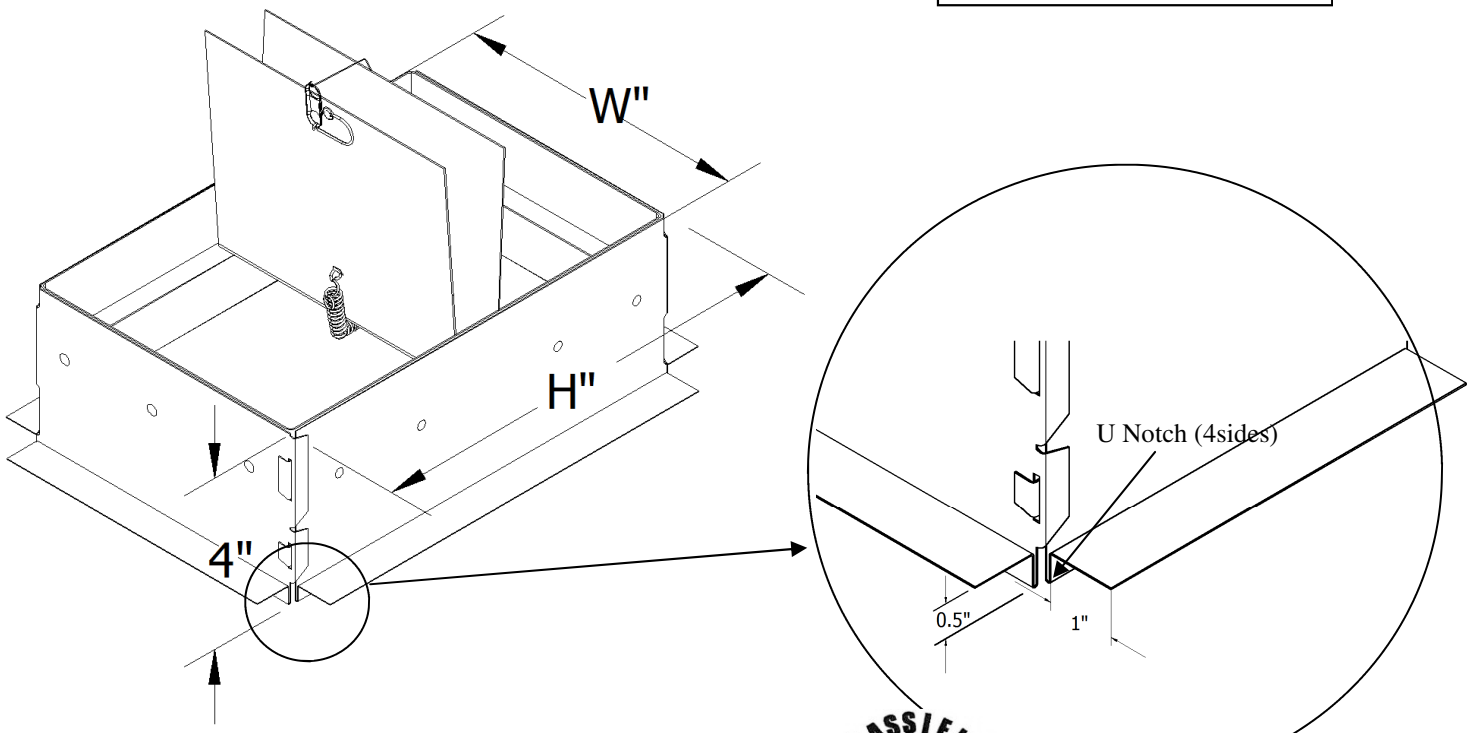


Note:
Ceramic insulation is not UL required on dampers with areas less than 80 sq.in and is optional dampers above 80 sq.in will be provided with blade insulation.

231 Commerce Dr. Montgomeryville, PA 18936
Tel: 215-412-4445 Fax: 215-412-4409
Email: lloydind@firedamper.com

138 Industrial Loop West, Orange Park, FL 32073
Tel: 904-541-1655 Fax: 904-541-1657
Email: lloydind1@firedamper.com

B1, 4/F., Luen Ming Hing Factory Building
36 Mok Cheong St.,
To Kwa Wan, Kowloon, H. K.
Tel: 852-2760-4188 Fax: 852-2760-4177
Email: tatanlexyim@lloydasia.com

Website: www.firedamper.com

*ALL STATED SPECIFICATIONS ARE SUBJECT TO UPDATE WITHOUT NOTICE OR OBLIGATION.



Lloyd Industries Inc. 2013

# LLOYD INDUSTRIES INC.

WWW.FIREDAMPER.COM

## CEILING RADIATION DAMPER
## STANDARD SIDE-OUTLET BOOT FOR REGISTER BOX ASM.



**MODEL:**
**CRD-50-95-BT**
**CRD-50-EA-95-BT**

### APPLICATION

CRD-50-95-BT /CRD-50-EA-95-BT is a 3-Hour rated damper, 90° boot, and round collar assembly for 1-Hour rated partitions. The damper is UL fire rated for Ceiling/Floor and Ceiling/Roof Assemblies L528, L558, L562, L563, L574, L585, P533, P544, P545 and P547. Please consult factory for use in other floor/ceiling and roof/ceiling designs.

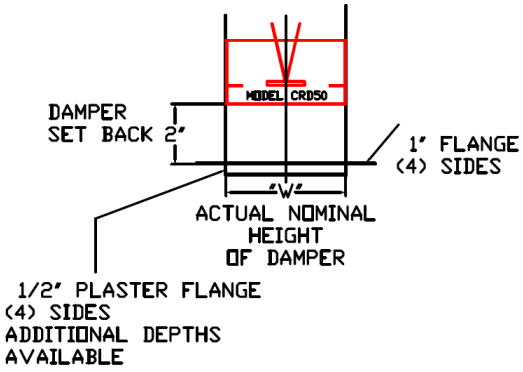


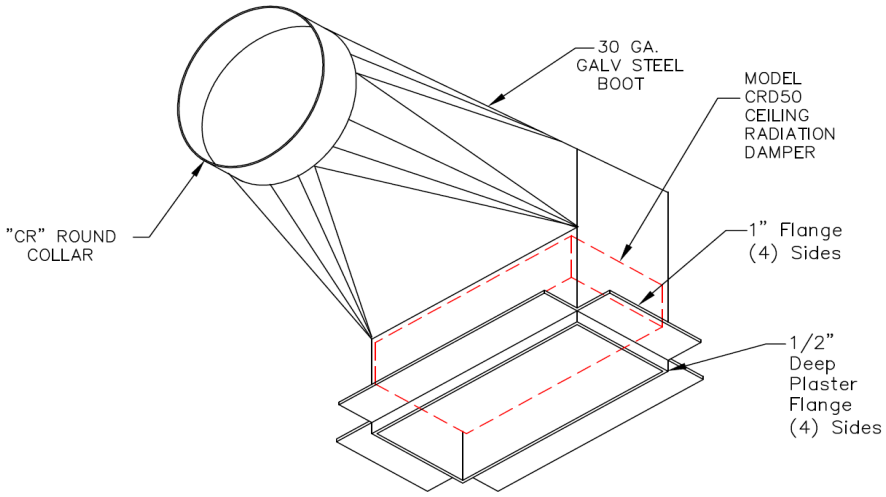


### CEILING RADIATION DAMPER (UL 3-HOUR RATING)

- Fusible Link (165°F standard) (optional temperatures available-212° F)
- Damper blades 22 gauge galvanized steel
- Roll formed frame 22 gauge galvanized steel
- Ceramic fiber with fiberglass cover (sizes over 80 SQ/IN)
- Rectangular W x H provided actual size for register installation

### BOOT/ REGISTER BOX

- 30 Gauge galvanized steel
- Standard 1/2" deep plaster flange (additional depths are available)
- Standard 1" wide flanges (4) sides
- Round type "CR' collar. (provide nominal size)

### FIBERGLASS INSULATION

- Exterior wrapped foil faced fiberglass R-6 insulation-field installed
- 1-1/2" wide UL 181 aluminum duct tape

### SIZE UNITS

- Maximum square 12"W x 12"H
- Maximum rectangle 144 SQ/IN

### OPTIONAL

- **With CRD-45LTD-95-BT shorter overall height.**

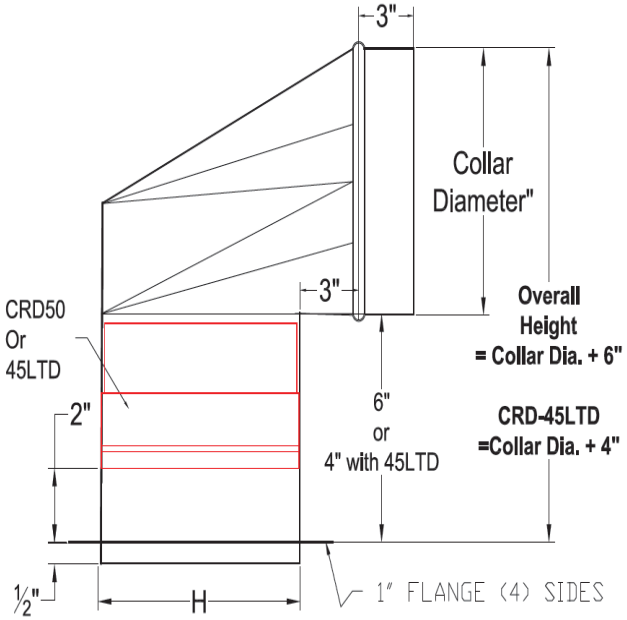


INSTALLATION INSTRUCTIONS AND THE PRODUCTS SPECIFIED, ARE IN CONFORMANCE TO ALL OF UNDERWRITERS LABORATORIES REQUIREMENTS 555C


231 Commerce Dr. Montgomeryville, PA 18936
Tel: 215-412-4445 Fax: 215-412-4409
Email: lloydind@firedamper.com

138 Industrial Loop West, Orange Park, FL 32073
Tel: 904-541-1655 Fax: 904-541-1657
Email: lloydind1@firedamper.com

B1, 4/F., Luen Ming Hing Factory Building
36 Mok Cheong St.,
To Kwa Wan, Kowloon, H. K.
Tel: 852-2760-4188 Fax: 852-2760-4177
Email: tatanlexyim@lloydasia.com

Website: www.firedamper.com



*ALL STATED SPECIFICATIONS ARE SUBJECT TO UPDATE WITHOUT NOTICE OR OBLIGATION.





Lloyd Industries Inc. 2017

# LLOYD INDUSTRIES INC.

WWW.FIREDAMPER.COM

## CEILING RADIATION DAMPER
## STANDARD SIDE-OUTLET BOOT FOR REGISTER BOX ASM.



**MODEL:**
**CRD-50-96-BT**
**CRD-50-EA-96-BT**

### APPLICATION

CRD-50-96-BT /CRD-50-EA-96-BT is a 3-Hour rated damper, End boot, and round collar assembly for 1-Hour rated partitions. The damper is UL fire rated for Ceiling/Floor and Ceiling/Roof Assemblies L528, L558, L562, L563, L574, L585, P533, P544, P545 and P547. Please consult factory for use in other floor/ceiling and roof/ceiling designs.

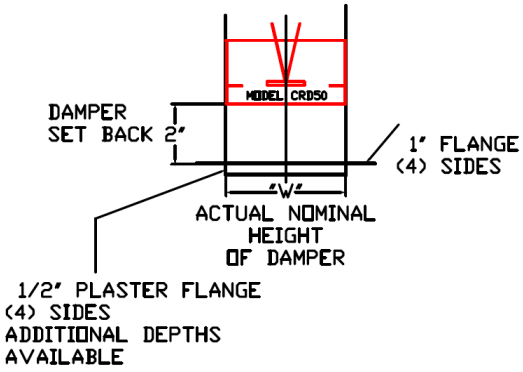


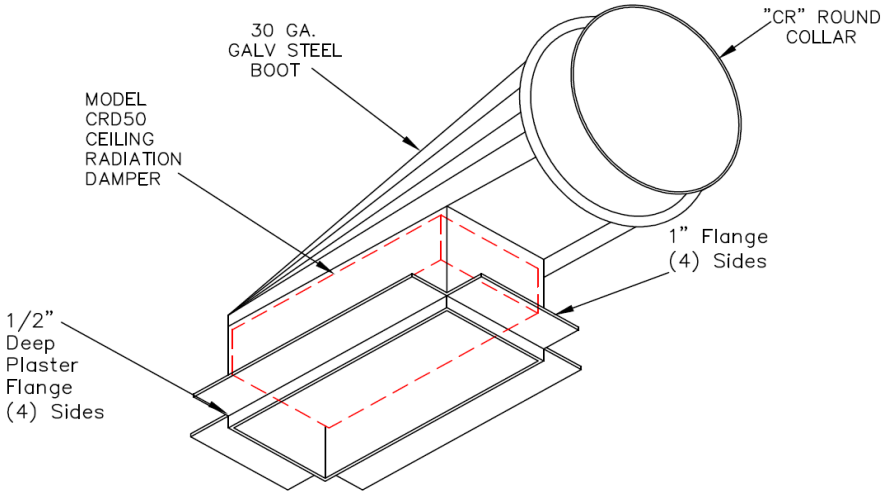


### CEILING RADIATION DAMPER (UL 3-HOUR RATING)

- Fusible Link (165°F standard) (Optional temperatures available-212°F)
- Damper blades 22 gauge galvanized steel
- Roll formed frame 22 gauge galvanized steel
- Ceramic fiber with fiberglass cover (sizes over 80 SQ/IN)
- Rectangular W x H provided actual size for register installation

### BOOT/ REGISTER BOX

- 30 Gauge galvanized steel
- Standard 1/2" deep plaster flange (additional depths are available)
- Standard 1" wide flanges (4) sides
- Round type "CR' collar. (provide nominal size)

### FIBERGLASS INSULATION

- Exterior wrapped foil faced fiberglass R-6 insulation-Field installed
- 1-1/2" wide UL 181 aluminum duct tape

### SIZE UNITS

Contact the factory for available W x H x Collar diameters

### OPTIONAL

- **With 45LTD shorter overall height**

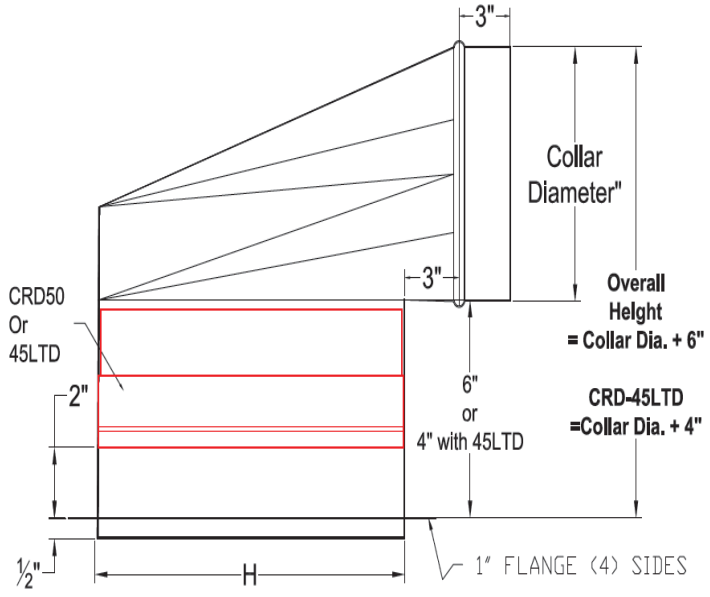


INSTALLATION INSTRUCTIONS AND THE PRODUCTS SPECIFIED, ARE IN CONFORMANCE TO ALL OF UNDERWRITERS LABORATORIES REQUIREMENTS 555C


231 Commerce Dr. Montgomeryville, PA 18936
Tel: 215-412-4445 Fax: 215-412-4409
Email: lloydind@firedamper.com

138 Industrial Loop West, Orange Park, FL 32073
Tel: 904-541-1655 Fax: 904-541-1657
Email: lloydind1@firedamper.com

B1, 4/F., Luen Ming Hing Factory Building
36 Mok Cheong St.,
To Kwa Wan, Kowloon, H. K.
Tel: 852-2760-4188 Fax: 852-2760-4177
Email: tatanlexyim@lloydasia.com

Website: www.firedamper.com



*ALL STATED SPECIFICATIONS ARE SUBJECT TO UPDATE WITHOUT NOTICE OR OBLIGATION.





Lloyd Industries Inc. 2017

# LLOYD INDUSTRIES INC.

WWW.FIREDAMPER.COM

## CEILING RADIATION DAMPER
## ROUND-TOP-OUTLET BOOT FOR REGISTER BOX ASM.



**MODELS:**
**CRD-50-98-BT**
**CRD-50-EA-98-BT**

**APPLICATION**

CRD-50-98-BT /CRD-50-EA-98-BT is a 3-Hour rated damper, Straight boot, and round collar assembly for 1-Hour rated partitions. The damper is UL fire rated for Ceiling/Floor and Ceiling/Roof Assemblies L528, L558, L562, L563, L574, L585, P533, P544, P545 and P547. Please consult factory for use in other floor/ceiling and roof/ceiling designs.

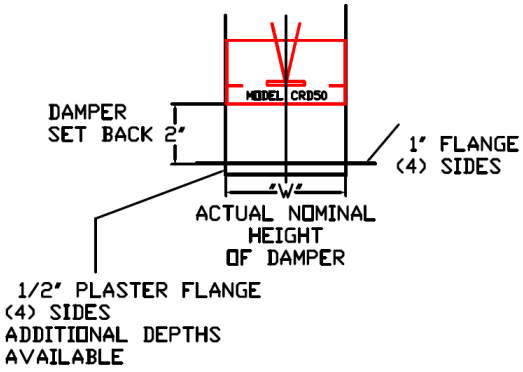


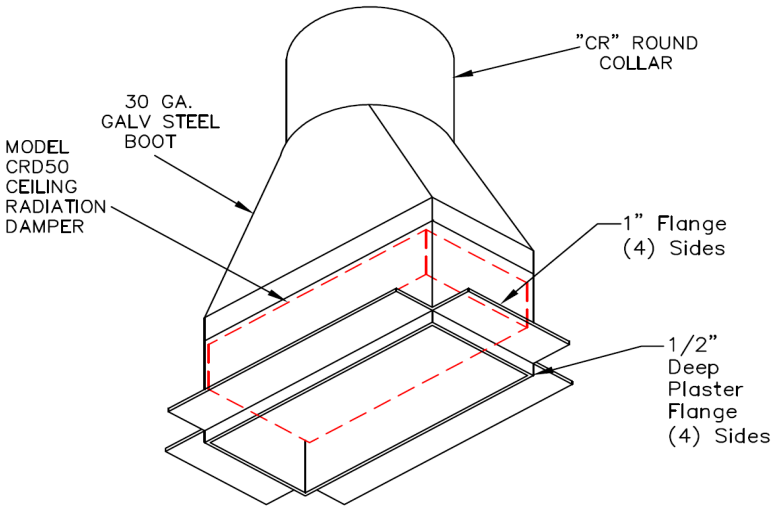


**CEILING RADIATION DAMPER (UL 3-HOUR RATING)**

- Fusible Link (165°F standard) (optional temperatures available)
- Damper blades 22 gauge galvanized steel
- Roll formed frame 22 gauge galvanized steel
- Ceramic fiber with fiberglass cover (sizes over 80 SQ/IN)
- Rectangular W x H provided actual size for register installation

**BOOT/ REGISTER BOX**

- 30 Gauge galvanized steel
- Standard 1/2" deep plaster flange (additional depths are available)
- Standard 1" wide flanges (4) sides
- Round type "CR' collar. (provide nominal size)

**FIBERGLASS INSULATION**

- Exterior wrapped foil faced fiberglass R-6 insulation-Field installed
- 1-1/2" wide UL 181 aluminum duct tape

**SIZE UNITS**

Contact the factory for available W x H x Collar diameters

**OPTIONAL**

- **With 45LTD shorter overall height**

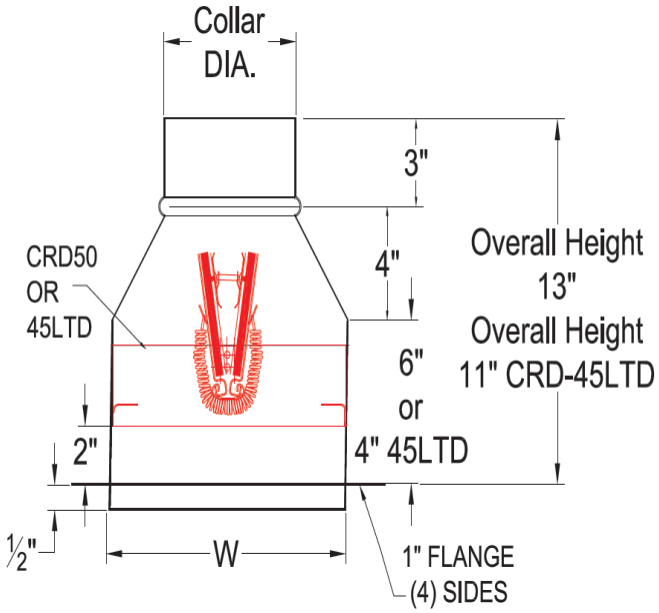


INSTALLATION INSTRUCTIONS AND THE PRODUCTS SPECIFIED, ARE IN CONFORMANCE TO ALL OF UNDERWRITERS LABORATORIES REQUIREMENTS 555C


231 Commerce Dr. Montgomeryville, PA 18936
Tel: 215-412-4445 Fax: 215-412-4409
Email: lloydind@firedamper.com

138 Industrial Loop West, Orange Park, FL 32073
Tel: 904-541-1655 Fax: 904-541-1657
Email: lloydind1@firedamper.com

B1, 4/F., Luen Ming Hing Factory Building
36 Mok Cheong St.,
To Kwa Wan, Kowloon, H. K.
Tel: 852-2760-4188 Fax: 852-2760-4177
Email: tatanlexyim@lloydasia.com

Website: www.firedamper.com



*ALL STATED SPECIFICATIONS ARE SUBJECT TO UPDATE WITHOUT NOTICE OR OBLIGATION.





Lloyd Industries Inc. 2017

# LLOYD INDUSTRIES INC.

WWW.FIREDAMPER.COM

## CEILING RADIATION DAMPER WITH FIRE RATED FIBERGLASS PLENUM BOX





"RECTANGULAR" FOR BOOT CLIPS INSTALLATIONS

**MODEL:**
**K-CRD50-FGPB-4.2**
**K-CRD50-EA-FGPB-4.2**

### APPLICATION

Model K-CRD50-FGPB-4.2 / K-CRD50-EA-FGPB-4.2 is a 1-Hour rated ceiling radiation damper, and fiberglass plenum box assembly. The damper is UL fire rated for Ceiling/Floor and Ceiling/Roof Assemblies L558, L562, L563, L574, L585, P533, P544, P545 and P547. Please consult factory for use in other floor/ceiling and roof/ceiling designs.

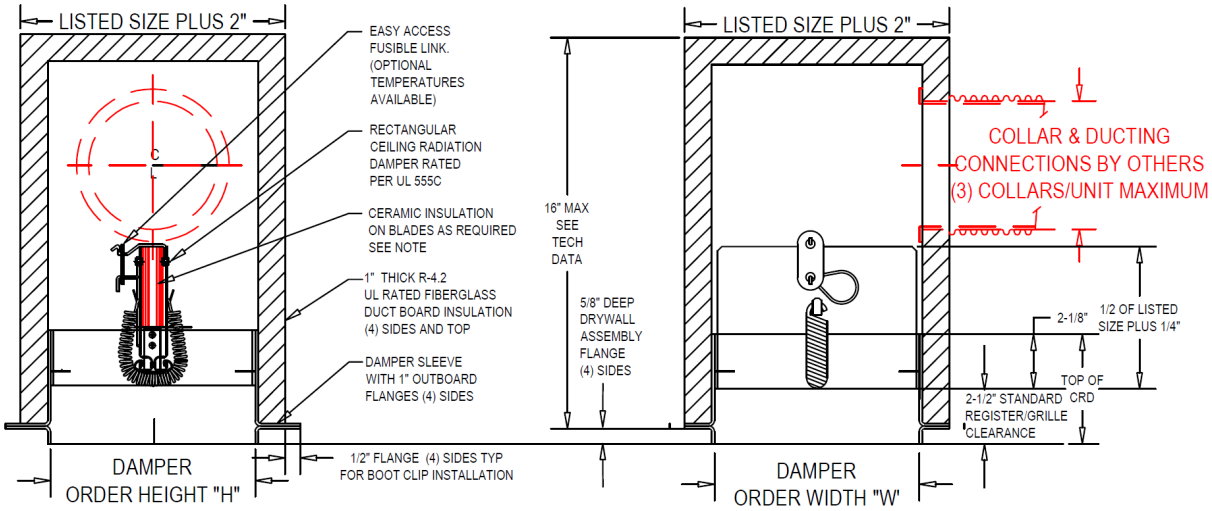


### CEILING RADIATION DAMPER

- Fusible Link: 165°F standard (optional: 212°F )
- Blades: 22 Ga. galvanized steel with ceramic fiberglass cover
- Frame: Roll formed 22 Ga. galvanized steel
- Sleeves: 22 Ga. minimum galvanized steel formed and assembled

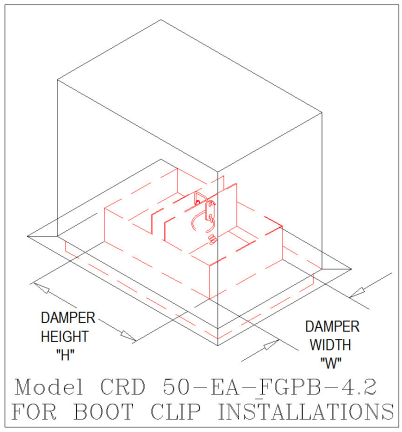


### PLENUM BOX

- UL classified 181 class 1 fiberglass duct board 1" thick, rated R-4.2 with reinforced fire resistant foil facing and interlocking cut corners for maximum heat sealing and resistance. (UL 181 class 1 listed aluminum tape at assembly.)
- Duct collars: cutting and installation of collars for UL classified class 0 or 1 flexible air ducting connection completed by others. 3 connections maximum.

### NOTES:

| Minimum Size (WxH) | Maximum Size (WxH) |
|---|---|
| 4"x4" | 16"x16" |

- Manufactured with blades opening as shown, except when register width "W" is less than 6".
- Minimum register sizes not less than 6" on width and 6" on height.
- Optional installation support angles available pre-installed on sleeves or less final assembly (2/U) 16 GA. X 3/4" X 3/4" X 26" LG (1.6 X 19 X 19); (2/U) 22 GA. X 1-1/2" 1-1/2" X 26" LG (.85 X 38 X 38); (4) PREMOUNTED BRACKETS USED WITH (2) SUPPORT ANGLES, 16 GA. X 3/4"X 3/4" X 26" LG (1.6 X 19 X 19).
- Optional: If preferred, these damper/sleeve/angle assemblies can be factory supplied. The "on site" installation of duct board plenum boxes to factory installation instruction sheets is permitted.


231 Commerce Dr. Montgomeryville, PA 18936
Tel: 215-412-4445 Fax: 215-412-4409
Email: lloydind@firedamper.com

138 Industrial Loop West, Orange Park, FL 32073
Tel: 904-541-1655 Fax: 904-541-1657
Email: lloydind1@firedamper.com

B1, 4/F., Luen Ming Hing Factory Building
36 Mok Cheong St.,
To Kwa Wan, Kowloon, H. K.
Tel: 852-2760-4188 Fax: 852-2760-4177
Email: tatanlexyim@lloydasia.com

Website: www.firedamper.com



*ALL STATED SPECIFICATIONS ARE SUBJECT TO UPDATE WITHOUT NOTICE OR OBLIGATION.





Lloyd Industries Inc. 2017

# LLOYD INDUSTRIES INC.

WWW.FIREDAMPER.COM

## CEILING RADIATION DAMPER WITH FIRE RATED FIBERGLASS PLENUM BOX





"RECTANGULAR" FOR BOOT CLIPS INSTALLATIONS

**MODEL:**
**K-CRD50-FGPB-6.0**
**K-CRD50-EA-FGPB-6.0**

### APPLICATION

Model K-CRD50-FGPB-6.0 / K-CRD50-EA-FGPB-6.0 is a 1-Hour rated ceiling radiation damper, and fiberglass plenum box assembly. The damper is UL fire rated for Ceiling/Floor and Ceiling/Roof Assemblies L558, L562, L563, L574, L585, P533, P544, P545 and P547. Please consult factory for use in other floor/ceiling and roof/ceiling designs.

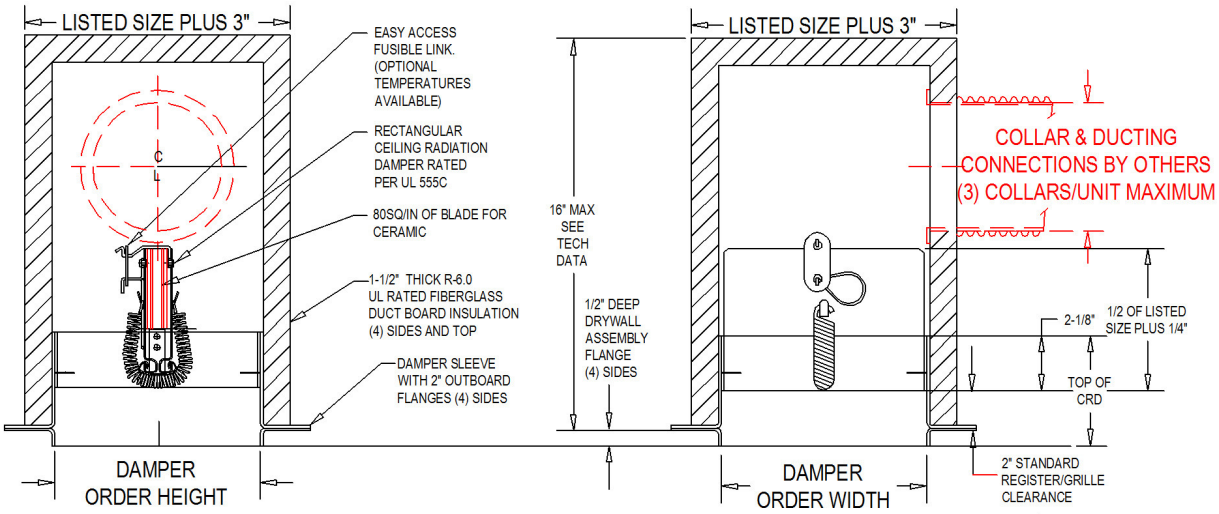


### CEILING RADIATION DAMPER

- Fusible Link: 165°F standard (optional: 212°F )
- Blades: 22 Ga. galvanized steel with 80 sq/in of blade for ceramic
- Frame: Roll formed 22 Ga. galvanized steel
- Sleeves: 22 Ga. minimum galvanized steel formed and assembled

### PLENUM BOX

- UL classified 181 class 1 fiberglass duct board 1" thick, rated R-6.0 with reinforced fire resistant foil facing and interlocking cut corners for maximum heat sealing and resistance. (UL 181 class 1 listed aluminum tape at assembly.)
- Duct collars: cutting and installation of collars for UL classified class 0 or 1 flexible air ducting connection completed by others. 3 connections maximum.

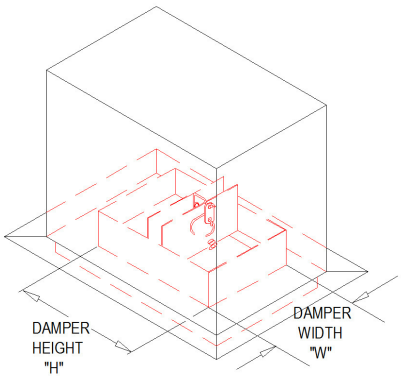


Model CRD 50-EA-FGPB-6.0
FOR BOOT CLIP INSTALLATIONS

### NOTES:

- Available in stainless steel
- Manufactured with blades opening as shown, except when register width "W" is less than 6".
- Minimum register sizes not less than 6" on width and 6" on height.

| Minimum Size (WxH) | Maximum Size (WxH) |
|---|---|
| 4"x4" | 16"x16" |

- Optional installation support angles available pre-installed on sleeves or less final assembly (2/U) 16 GA. X 3/4" X 3/4" X 26" LG (1.6 X 19 X 19); (2/U) 22 GA. X 1-1/2" 1-1/2" X 26" LG (.85 X 38 X 38); (4) PREMOUNTED BRACKETS USED WITH (2) SUPPORT ANGLES, 16 GA. X 3/4"X 3/4" X 26" LG (1.6 X 19 X 19).
- Optional: If preferred, these damper/sleeve/angle assemblies can be factory supplied. The "on site" installation of duct board plenum boxes to factory installation instruction sheets is permitted.


231 Commerce Dr. Montgomeryville, PA 18936
Tel: 215-412-4445 Fax: 215-412-4409
Email: lloydind@firedamper.com

138 Industrial Loop West, Orange Park, FL 32073
Tel: 904-541-1655 Fax: 904-541-1657
Email: lloydind1@firedamper.com

B1, 4/F., Luen Ming Hing Factory Building
36 Mok Cheong St.,
To Kwa Wan, Kowloon, H. K.
Tel: 852-2760-4188 Fax: 852-2760-4177
Email: tatanlexyim@lloydasia.com

Website: www.firedamper.com



*ALL STATED SPECIFICATIONS ARE SUBJECT TO UPDATE WITHOUT NOTICE OR OBLIGATION.





Lloyd Industries Inc. 2017

# LLOYD INDUSTRIES INC.

WWW.FIREDAMPER.COM

## CEILING RADIATION DAMPER WITH REGISTER BOX ASSEMBLY

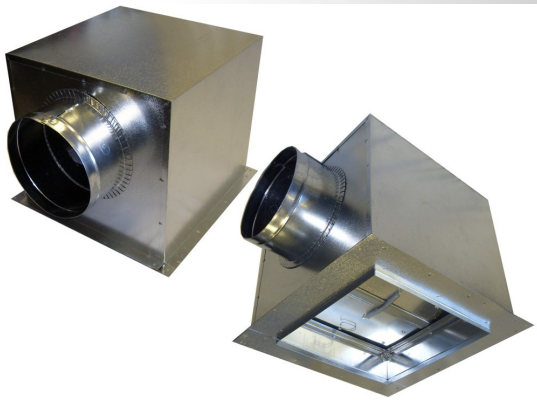

**MODEL:**
**CRD50-BT-6.0**
**CRD50-EA-BT-6.0**

### APPLICATION

Model CRD50-BT-6.0 / CRD50-EA-BT-6.0 is an 1-Hour rated CRD/ Register/Grille assembly. The damper is UL fire rated for Ceiling/Floor and Ceiling/Roof Assemblies L528, L558, L562, L563, L574, L585, P533, P544, P545 and P547. Please consult factory for use in other floor/ceiling and roof/ ceiling designs.

**TYPE CRD:** "RECTANGULAR" SIDE OUTLET

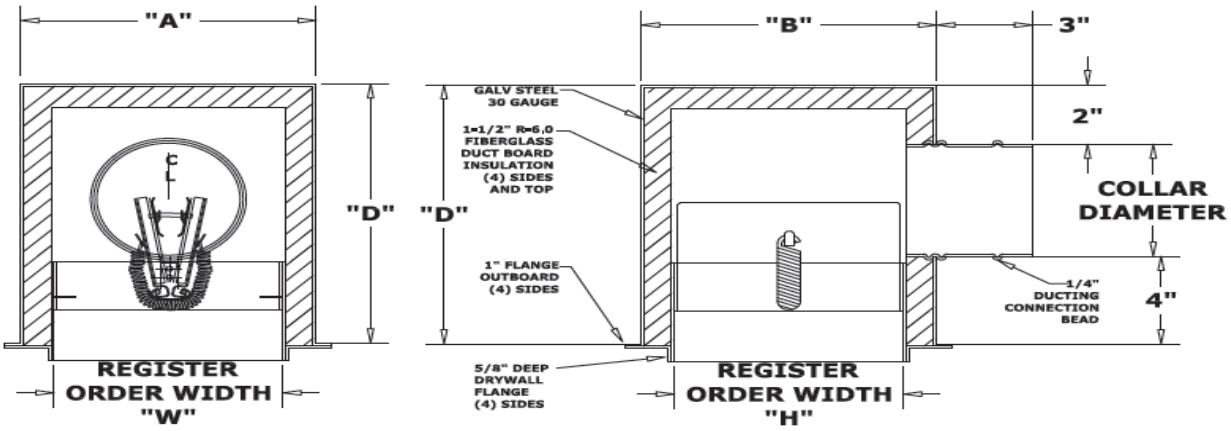


"A"=W+3" "B"=H+3" "D"=COLLAR DIA.+6"

### CEILING RADIATION DAMPER

- Fusible Link: 165°F standard
- Blades: 22 Ga. galvanized steel with ceramic fiberglass cover
- Frame: Roll formed 22 Ga. galvanized steel

### PLENUM BOX

- Outer Box: 26 Ga. galvanized steel
- Collar: Roll formed 26 Ga. galvanized steel with roll formed 1/4" beading
- Insulation: Fiberglass duct board 1-1/2" thick (R-6.0)
- "C" Diameter provided nominal order diameter

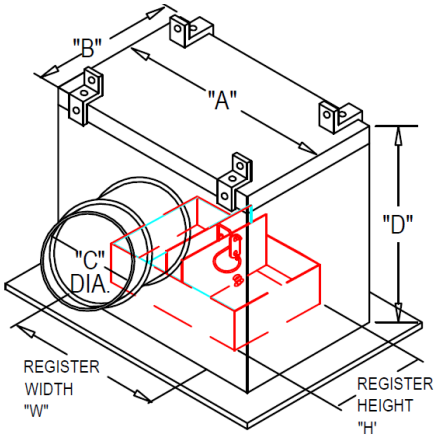


### NOTES:

- Available in stainless steel.
- Available with extended length drywall flange.
- Manufactured with blades opening as shown. (Except when register width "W" is less than 6".)
- Minimum CRD50-EA-BT-6.0 register sizes not less than 6" on width and 6" on height.
- Ceramic insulation is not required on dampers with areas less than 80 SQ/IN and is optional. Dampers above 80 SQ/IN will be provided with blade insulation.
- **Meets UL263, NFPA 90A requirements.**

| Minimum Size (WxH) | Maximum Size (WxH) |
|---|---|
| 4"x4"x2" (collar) | 16"x16"x12" (collar) |

INSTALLATION INSTRUCTIONS AND THE PRODUCTS SPECIFIED, ARE IN CONFORMANCE TO ALL OF UNDERWRITERS LABORATORIES REQUIREMENTS 555C


231 Commerce Dr. Montgomeryville, PA 18936
Tel: 215-412-4445 Fax: 215-412-4409
Email: lloydind@firedamper.com

138 Industrial Loop West, Orange Park, FL 32073
Tel: 904-541-1655 Fax: 904-541-1657
Email: lloydind1@firedamper.com

B1, 4/F., Luen Ming Hing Factory Building
36 Mok Cheong St.,
To Kwa Wan, Kowloon, H. K.
Tel: 852-2760-4188 Fax: 852-2760-4177
Email: tatanlexyim@lloydasia.com

Website: www.firedamper.com



*ALL STATED SPECIFICATIONS ARE SUBJECT TO UPDATE WITHOUT NOTICE OR OBLIGATION.





Lloyd Industries Inc. 2017

# LLOYD INDUSTRIES INC.

WWW.FIREDAMPER.COM

## CEILING RADIATION DAMPER WITH REGISTER BOX ASSEMBLY

**MODEL:**
**CRD55-BT-6.0**
**CRD55-EA-BT-6.0**





### APPLICATION

Model CRD55-BT-6.0 / CRD55-EA-BT-6.0 is an 1-Hour rated CRD/Register Box assembly. The damper is UL fire rated for Ceiling/Floor and Ceiling/Roof Assemblies L528, L558, L562, L563, L574, L585, P533, P544, P545 and P547. Please consult factory for use in other floor/ceiling and roof/ceiling designs.

**TYPE CRD:** "ROUND"

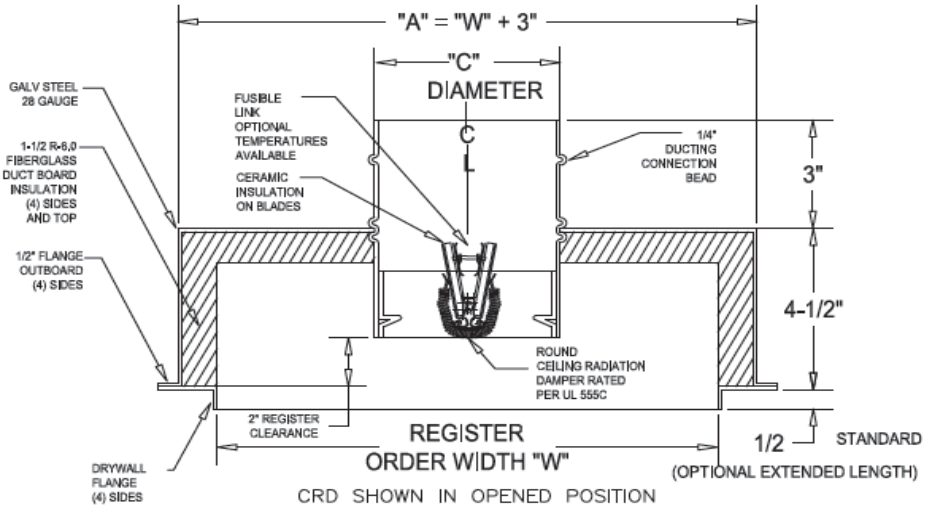


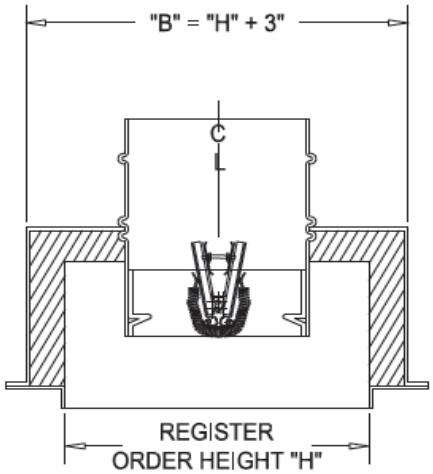


### CEILING RADIATION DAMPER

- Fusible Link: 165°F standard (options are available )
- Blades: 22 Ga. galvanized steel with ceramic fiberglass cover
- Frame: Roll formed 22 Ga. galvanized steel

### PLENUM BOX

- Outer Box: 26 Ga. galvanized steel
- Collar: Roll formed 26 Ga. galvanized steel with roll formed 1/4" beading
- Insulation: Duct liner 1-1/2" thick (R-6.0)
- "C" Diameter provided nominal order diameter

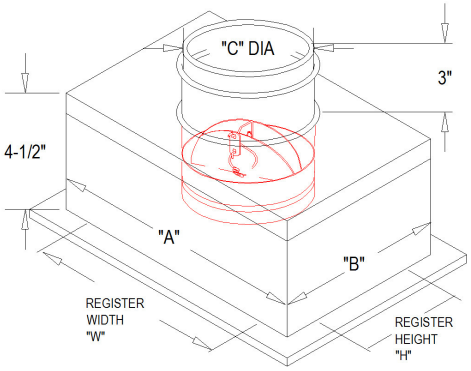


Model CRD 55-EA-BT SHOWN

| Minimum Size (WxH) | Maximum Size (WxH) |
|---|---|
| 7"x7"x4" (collar) | 16"x16"x12" (collar) |

### NOTES:

- Available in stainless steel.
- Available with extended length drywall flange.
- CRD55-EA-BT minimum collar diameter is 6".
- Register/Grill (steel) supplied by other.
- Ceramic insulation is not required on dampers with areas less than 80 SQ/IN and is optional. Dampers above 80 SQ/IN will be provided with blade insulation.
- **Meets UL263, NFPA 90A requirements.**

INSTALLATION INSTRUCTIONS AND THE PRODUCTS SPECIFIED, ARE IN CONFORMANCE TO ALL OF UNDERWRITERS LABORATORIES REQUIREMENTS 555C


231 Commerce Dr. Montgomeryville, PA 18936
Tel: 215-412-4445 Fax: 215-412-4409
Email: lloydind@firedamper.com

138 Industrial Loop West, Orange Park, FL 32073
Tel: 904-541-1655 Fax: 904-541-1657
Email: lloydind1@firedamper.com

B1, 4/F., Luen Ming Hing Factory Building
36 Mok Cheong St.,
To Kwa Wan, Kowloon, H. K.
Tel: 852-2760-4188 Fax: 852-2760-4177
Email: tatanlexyim@lloydasia.com

Website: www.firedamper.com



*ALL STATED SPECIFICATIONS ARE SUBJECT TO UPDATE WITHOUT NOTICE OR OBLIGATION.





Lloyd Industries Inc. 2017

# LLOYD INDUSTRIES INC.

WWW.FIREDAMPER.COM

## CEILING RADIATION DAMPER WITH REGISTER BOX ASSEMBLY





**MODEL:**
**CRD55-BT-4.2-45**
**CRD55-EA-BT-4.2-45**

### APPLICATION

Model CRD55-BT-4.2-45 / CRD55-EA-BT-4.2-45 is an 1-Hour rated CRD/ Register/Grille assembly. The damper is UL fire rated for Ceiling/Floor and Ceiling/Roof Assemblies L528, L558, L562, L563, L574, L585, P533, P544, P545 and P547. Please consult factory for use in other floor/ceiling and roof/ ceiling designs.

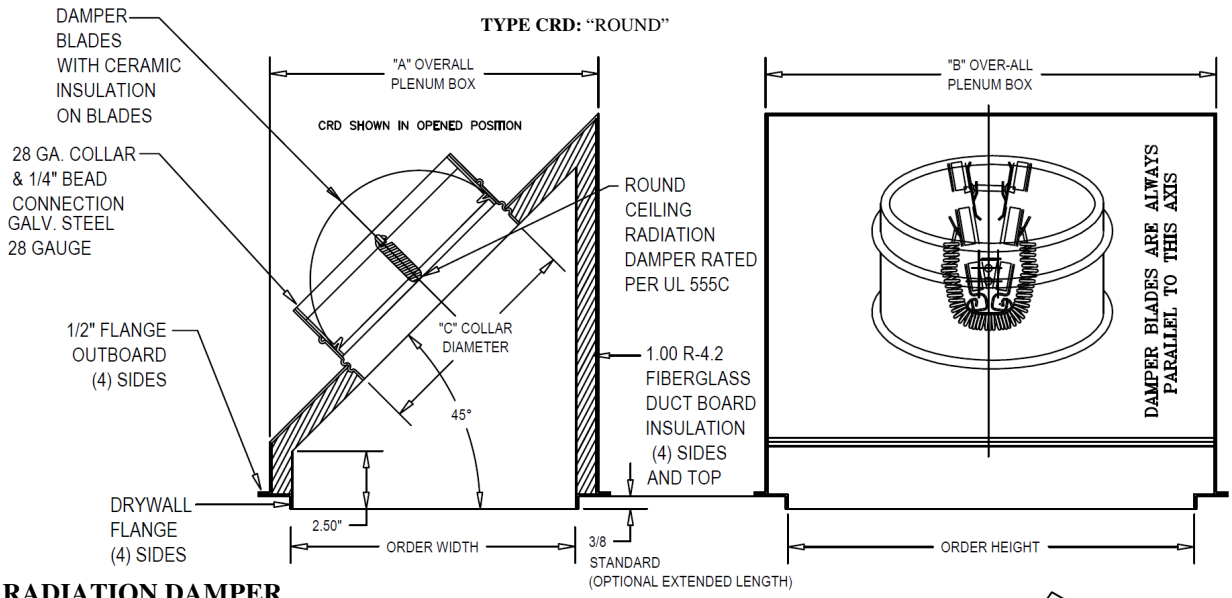


### CEILING RADIATION DAMPER

- Fusible Link: 165°F standard (options are available )
- Blades: 22 Ga. galvanized steel with ceramic fiberglass cover
- Frame: Roll formed 22 Ga. galvanized steel

### PLENUM BOX

- Outer Box: 26 Ga. galvanized steel
- Collar: Roll formed 26 Ga. galvanized steel with roll formed 1/4" beading
- Insulation: Fiberglass duct board 1" thick (R-4.2)
- "C" Diameter provided nominal order diameter

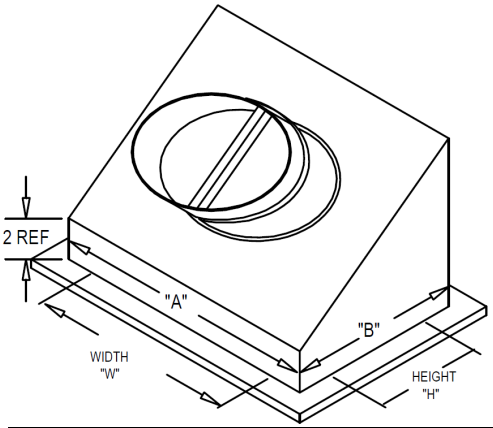


| Minimum Size (WxH) | Maximum Size (WxH) |
|---|---|
| 6"x6"x4" (collar) | 16"x16"x12" (collar) |

### NOTES:

- Available in stainless steel.
- Available with extended length drywall flange.
- Collar Diameter: Minimum 3", Maximum 12".
- Register/Grill (steel) supplied by other.
- Ceramic insulation is not required on dampers with areas less than 80 SQ/ IN and is optional. Dampers above 80 SQ/IN will be provided with blade insulation.
- **Meets UL263, NFPA 90A requirements.**

INSTALLATION INSTRUCTIONS AND THE PRODUCTS SPECIFIED, ARE IN CONFORMANCE TO ALL OF UNDERWRITERS LABORATORIES REQUIREMENTS 555C


231 Commerce Dr. Montgomeryville, PA 18936
Tel: 215-412-4445 Fax: 215-412-4409
Email: lloydind@firedamper.com

138 Industrial Loop West, Orange Park, FL 32073
Tel: 904-541-1655 Fax: 904-541-1657
Email: lloydind1@firedamper.com

B1, 4/F., Luen Ming Hing Factory Building
36 Mok Cheong St.,
To Kwa Wan, Kowloon, H. K.
Tel: 852-2760-4188 Fax: 852-2760-4177
Email: tatanlexyim@lloydasia.com

Website: www.firedamper.com



*ALL STATED SPECIFICATIONS ARE SUBJECT TO UPDATE WITHOUT NOTICE OR OBLIGATION.





Lloyd Industries Inc. 2017

# LLOYD INDUSTRIES INC.

WWW.FIREDAMPER.COM

## CEILING RADIATION DAMPER WITH REGISTER BOX ASSEMBLY





**MODEL:**
**CRD55-BT-6.0-45**
**CRD55-EA-BT-6.0-45**

### APPLICATION

Model CRD55-BT-6.0-45 / CRD55-EA-BT-6.0-45 is an 1-Hour rated CRD/ Register/Grille assembly. The damper is UL fire rated for Ceiling/Floor and Ceiling/Roof Assemblies L528, L558, L562, L563, L574, L585, P533, P544, P545 and P547. Please consult factory for use in other floor/ceiling and roof/ ceiling designs.

**TYPE CRD:** "ROUND"

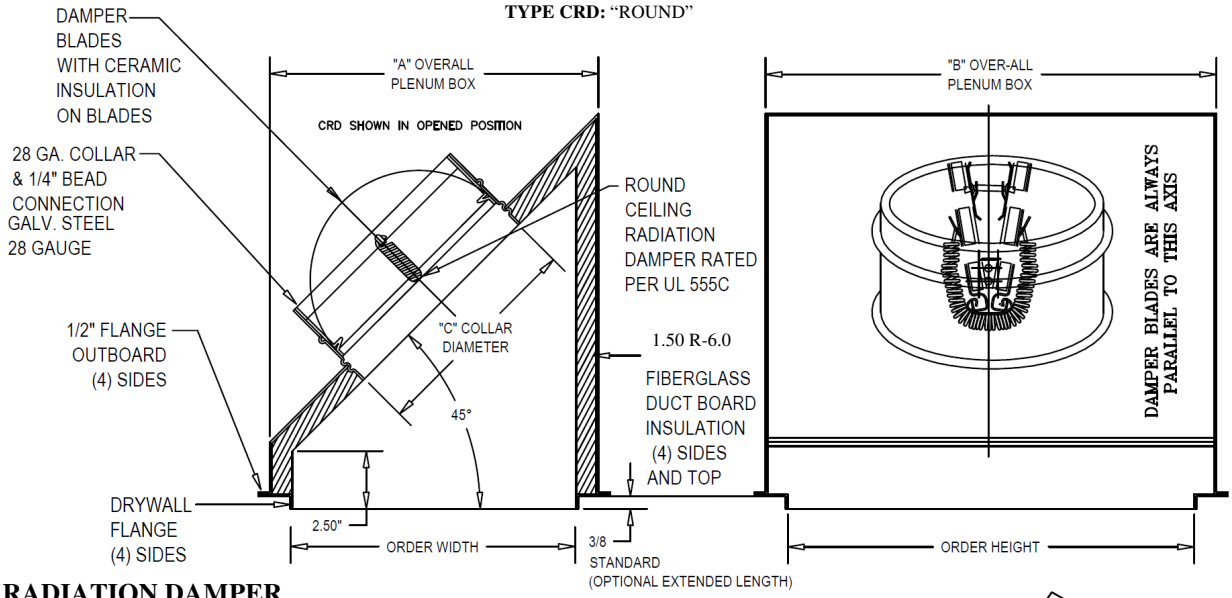


### CEILING RADIATION DAMPER

- Fusible Link: 165°F standard (options are available )
- Blades: 22 Ga. galvanized steel with ceramic fiberglass cover
- Frame: Roll formed 22 Ga. galvanized steel

### PLENUM BOX

- Outer Box: 26 Ga. galvanized steel
- Collar: Roll formed 26 Ga. galvanized steel with roll formed 1/4" beading
- Insulation: Fiberglass duct board 1.50" thick (R-6.0)
- "C" Diameter provided nominal order diameter

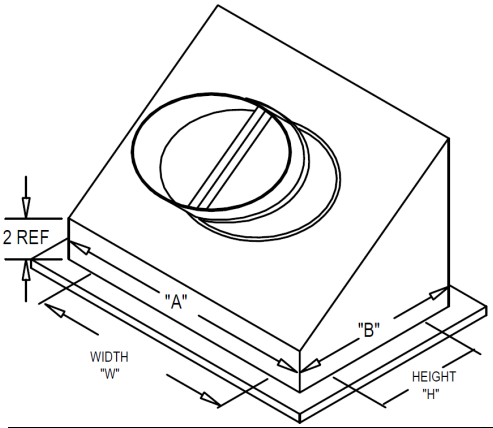


| Minimum Size (WxH) | Maximum Size (WxH) |
|---|---|
| 6"x6"x4" (collar) | 16"x16"x12" (collar) |

### NOTES:

- Available in stainless steel.
- Available with extended length drywall flange.
- Collar Diameter: Minimum 3", Maximum 12".
- Register/Grill (steel) supplied by other.
- Ceramic insulation is not required on dampers with areas less than 80 SQ/ IN and is optional. Dampers above 80 SQ/IN will be provided with blade insulation.
- **Meets UL263, NFPA 90A requirements.**

INSTALLATION INSTRUCTIONS AND THE PRODUCTS SPECIFIED, ARE IN CONFORMANCE TO ALL OF UNDERWRITERS LABORATORIES REQUIREMENTS 555C


231 Commerce Dr. Montgomeryville, PA 18936
Tel: 215-412-4445 Fax: 215-412-4409
Email: lloydind@firedamper.com

138 Industrial Loop West, Orange Park, FL 32073
Tel: 904-541-1655 Fax: 904-541-1657
Email: lloydind1@firedamper.com

B1, 4/F., Luen Ming Hing Factory Building
36 Mok Cheong St.,
To Kwa Wan, Kowloon, H. K.
Tel: 852-2760-4188 Fax: 852-2760-4177
Email: tatanlexyim@lloydasia.com

Website: www.firedamper.com



*ALL STATED SPECIFICATIONS ARE SUBJECT TO UPDATE WITHOUT NOTICE OR OBLIGATION.





Lloyd Industries Inc. 2017

# LLOYD INDUSTRIES INC.

WWW.FIREDAMPER.COM

## CEILING RADIATION DAMPER WITH REGISTER BOX ASSEMBLY

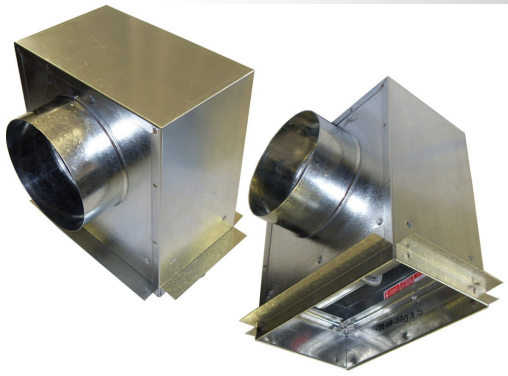

**MODEL:**
**CRD50-NI-BT-26GS**
**CRD50-NI-BT-26GS-EA**

### APPLICATION

Model CRD50-NI-BT-26GS/ CRD50-NI-BT-26GS-EA is an 1-Hour rated damper and box assembly. The damper is UL fire rated for Ceiling/Floor and Ceiling/Roof Assemblies L558, L562, L563, L574, L585, P533, P544, P545 and P547. Please consult factory for use in other floor/ceiling and roof/ceiling designs.

**TYPE CRD:** Rectangular damper with non-insulated galvanized steel register box

**"D" = 5" + Collar Diameter"**

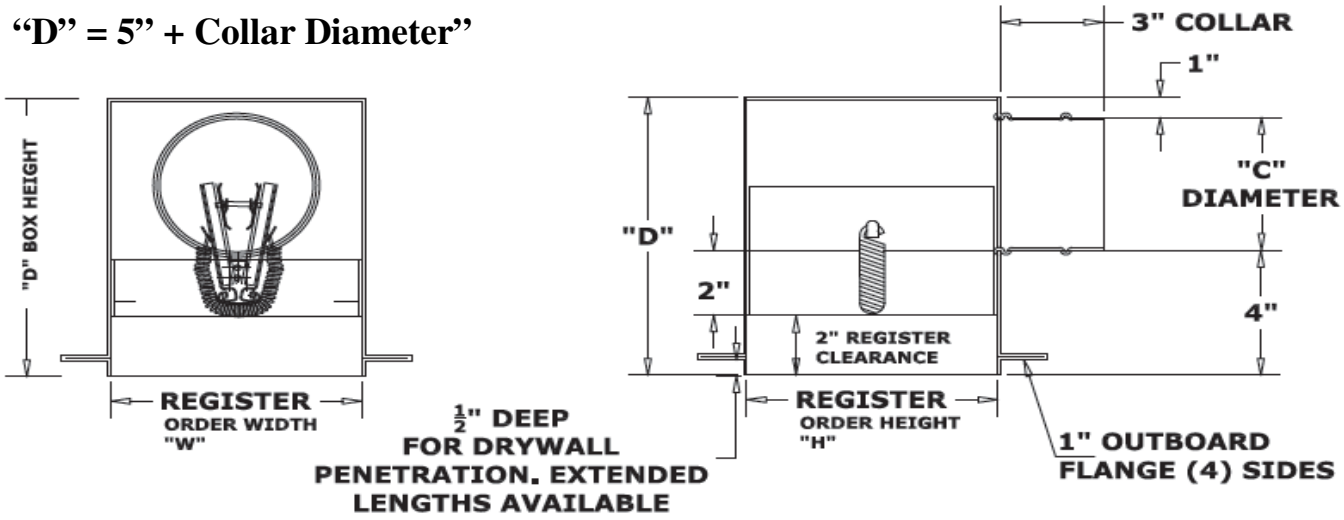


### CEILING RADIATION DAMPER

- Rating: UL listed ceiling radiation damper UL-555C
- Fusible Link: 165°F standard
- Blades: 22 Ga. galvanized steel with ceramic fiberglass cover
- Frame: Roll formed 22 Ga. galvanized steel

### PLENUM BOX

- Outer Box: 26 Ga. galvanized steel
- Collar: Roll formed 26 Ga. galvanized steel with roll formed 1/4" beading
- Insulation: None provided
- Round beaded collar provided to nominal diameter order sizes (1-1/4").

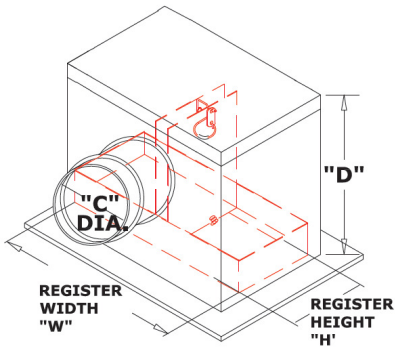


"D"=5"+COLLAR DIA.

### NOTES:

- Available in stainless steel.
- Manufactured with blades open as shown.
- Minimum CRD50-EA-NI-BT register sizes not less than 6" on width and 4" on height.
- Ceramic insulation is not required on dampers with areas less than 80 SQ/IN and is optional. Dampers above 80 SQ/IN will be provided with blade insulation.
- Register/Grille supplied by other.

| Minimum Size (WxH) | Maximum Size (WxH) |
|---|---|
| 6"x6"x3" (collar) | 24"x24"x22" (collar) |


231 Commerce Dr. Montgomeryville, PA 18936
Tel: 215-412-4445 Fax: 215-412-4409
Email: lloydind@firedamper.com

138 Industrial Loop West, Orange Park, FL 32073
Tel: 904-541-1655 Fax: 904-541-1657
Email: lloydind1@firedamper.com

B1, 4/F., Luen Ming Hing Factory Building
36 Mok Cheong St.,
To Kwa Wan, Kowloon, H. K.
Tel: 852-2760-4188 Fax: 852-2760-4177
Email: tatanlexyim@lloydasia.com

Website: www.firedamper.com



*ALL STATED SPECIFICATIONS ARE SUBJECT TO UPDATE WITHOUT NOTICE OR OBLIGATION.





Lloyd Industries Inc. 2017

# LLOYD INDUSTRIES INC.

WWW.FIREDAMPER.COM

## CEILING RADIATION DAMPER WITH REGISTER BOX ASSEMBLY

**MODEL:**
**CRD50-NI-BT-26GT**
**CRD50-NI-BT-26GT-EA**

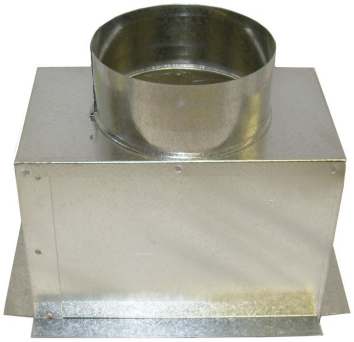

### APPLICATION

Model CRD50-NI-BT-26GT/ CRD50-NI-BT-26GT-EA is an 1-Hour rated CRD/ Register/Grille assembly. The damper is UL fire rated for Ceiling/Floor and Ceiling/Roof Assemblies L558, L562, L563, L574, L585, P533, P544, P545 and P547. Please consult factory for use in other floor/ceiling and roof/ceiling designs.

**TYPE CRD:** Rectangular damper with non-insulated register box, "top outlet".

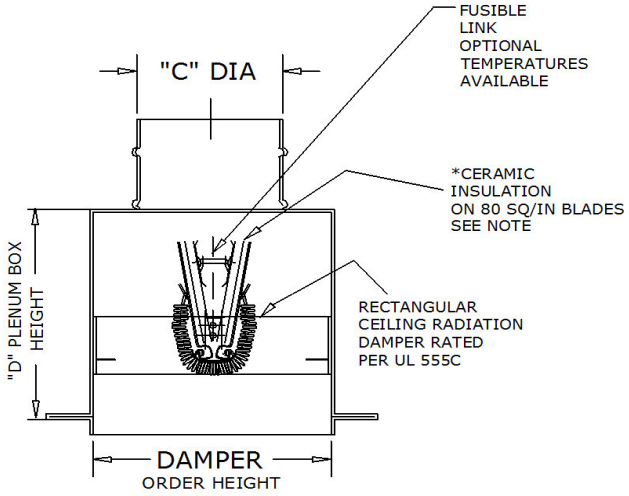


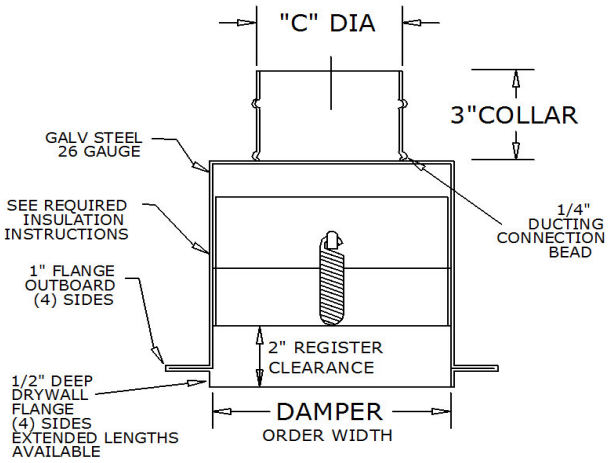


### CEILING RADIATION DAMPER

- Rating: UL listed ceiling radiation damper UL-555C
- Fusible Link: 165°F standard
- Blades: 22 Ga. galvanized steel with ceramic fiberglass cover
- Frame: Roll formed 22 Ga. galvanized steel

### PLENUM BOX

- Outer Box: 26 Ga. galvanized steel
- Collar: Roll formed 26 Ga. galvanized steel with roll formed 1/4" beading
- Insulation: None provided
- "C" Diameter provided nominal order diameter

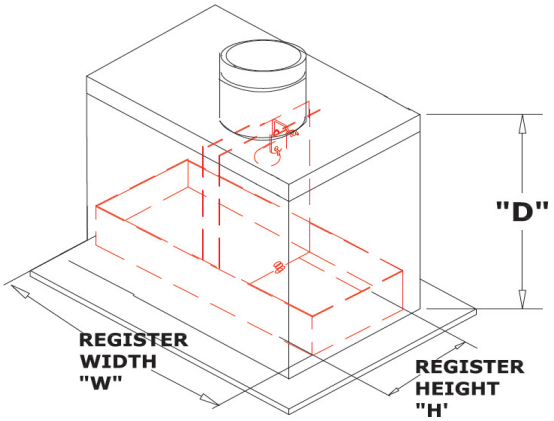


**"D" = "W"/2 + 4"**

### NOTES:

- Available in stainless steel.
- Manufactured with blades open as shown. (Except when register width "W" is less than 6")
- Minimum CRD50-EA-NI-BT register sizes not less than 6" on width and 6" on height.
- Ceramic insulation is not required on dampers with areas less than 80 SQ/IN and is optional.
- Dampers above 80 SQ/IN will be provided with blade insulation.
- Register/Grille supplied by other.

| Minimum Size (WxH) | Maximum Size (WxH) |
|---|---|
| 6"x6"x3" (collar) | 24"x24"x22" (collar) |


231 Commerce Dr. Montgomeryville, PA 18936
Tel: 215-412-4445 Fax: 215-412-4409
Email: lloydind@firedamper.com

138 Industrial Loop West, Orange Park, FL 32073
Tel: 904-541-1655 Fax: 904-541-1657
Email: lloydind1@firedamper.com

B1, 4/F., Luen Ming Hing Factory Building
36 Mok Cheong St.,
To Kwa Wan, Kowloon, H. K.
Tel: 852-2760-4188 Fax: 852-2760-4177
Email: tatanlexyim@lloydasia.com

Website: www.firedamper.com



*ALL STATED SPECIFICATIONS ARE SUBJECT TO UPDATE WITHOUT NOTICE OR OBLIGATION.





Lloyd Industries Inc. 2017

# LLOYD INDUSTRIES INC.

WWW.FIREDAMPER.COM

## CEILING RADIATION DAMPER WITH REGISTER BOX ASSEMBLY

**MODEL:**
**CRD4X-NI-BT-26GS**

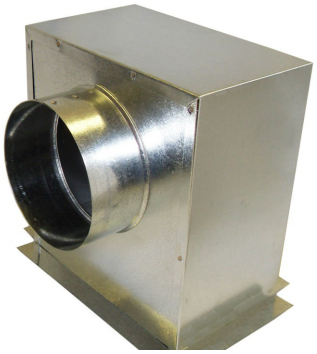

### APPLICATION

Model CRD4X-NI-BT-26GS is an 1-Hour rated CRD/Register/Grille assembly. The damper is UL fire rated for Ceiling/Floor and Ceiling/Roof Assemblies L528, L558, L562, L563, L574, L585, P533, P544, P545 and P547. Please consult factory for use in other floor/ceiling and roof/ceiling designs.

**TYPE CRD:** Rectangular damper with non-insulated register box, "side outlet".

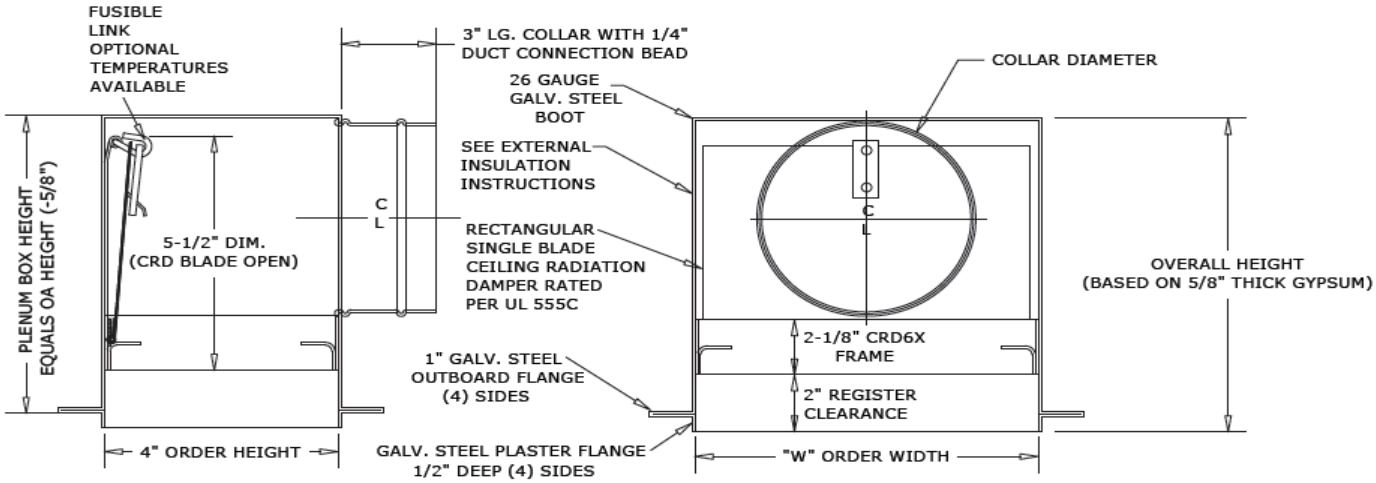


### CEILING RADIATION DAMPER

- Rating: UL listed ceiling radiation damper UL-555C
- Fusible Link: 165°F standard
- Blades: 22 Ga. galvanized steel with ceramic fiberglass cover
- Frame: Roll formed 22 Ga. galvanized steel

### PLENUM BOX

- Outer Box: 26 Ga. galvanized steel
- Collar: Roll formed 26 Ga. Galvanized
- Insulation: None provided
- "C" Diameter provided nominal order diameter (-1/4")

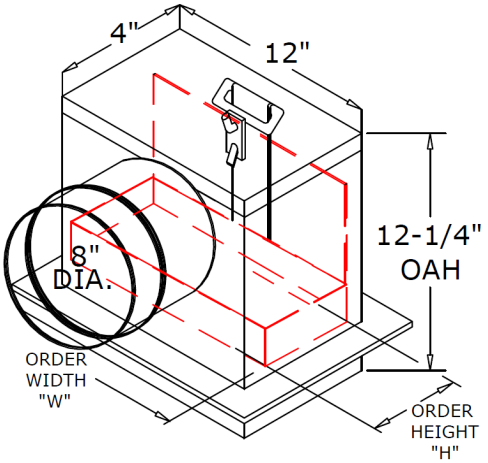


**NOTES:**

- Manufactured with blades open as shown.
- Ceramic insulation is not required on damper blades with W x H areas less than 80 SQ/IN.
- Register/Grille supplied by other.

| Minimum Size (WxH) | Maximum Size (WxH) |
|---|---|
| 6"x4"x4" (collar) | 14"x4"x8" (collar) |


231 Commerce Dr. Montgomeryville, PA 18936
Tel: 215-412-4445 Fax: 215-412-4409
Email: lloydind@firedamper.com

138 Industrial Loop West, Orange Park, FL 32073
Tel: 904-541-1655 Fax: 904-541-1657
Email: lloydind1@firedamper.com

B1, 4/F., Luen Ming Hing Factory Building
36 Mok Cheong St.,
To Kwa Wan, Kowloon, H. K.
Tel: 852-2760-4188 Fax: 852-2760-4177
Email: tatanlexyim@lloydasia.com

Website: www.firedamper.com



*ALL STATED SPECIFICATIONS ARE SUBJECT TO UPDATE WITHOUT NOTICE OR OBLIGATION.





Lloyd Industries Inc. 2017

# LLOYD INDUSTRIES INC.

WWW.FIREDAMPER.COM

## CEILING RADIATION DAMPER WITH REGISTER BOX ASSEMBLY

**MODEL:**
**CRD6X-NI-BT-26GS**



### APPLICATION

Model CRD6X-NI-BT-26GS is an 1-Hour rated CRD/Register/Grille assembly. The damper is UL fire rated for Ceiling/Floor and Ceiling/Roof Assemblies L558, L562, L563, L574, L585, P533, P544, P545 and P547. Please consult factory for use in other floor/ceiling and roof/ceiling designs.

**TYPE CRD:** Rectangular damper with non-insulated register box, "side outlet".

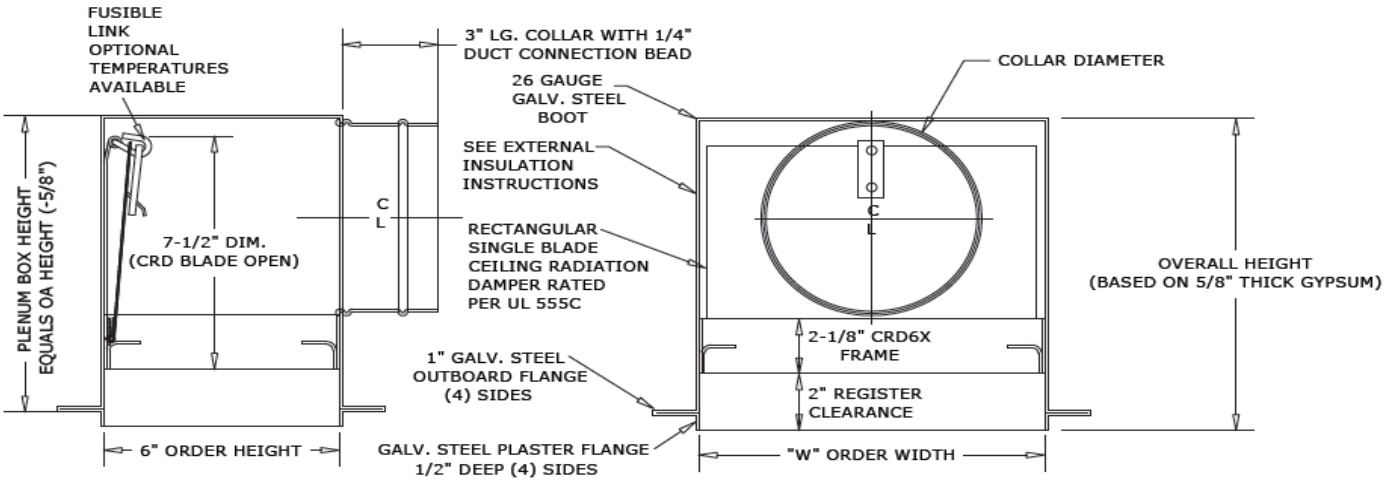


### CEILING RADIATION DAMPER

- Rating: UL listed ceiling radiation damper UL-555C
- Fusible Link: 165°F standard
- Blades: 22 Ga. galvanized steel with ceramic fiberglass cover
- Frame: Roll formed 22 Ga. galvanized steel

### PLENUM BOX

- Outer Box: 26 Ga. galvanized steel
- Collar: Roll formed 26 Ga. galvanized steel
- Insulation: None provided
- "C" Diameter provided nominal order diameter (-1/4")

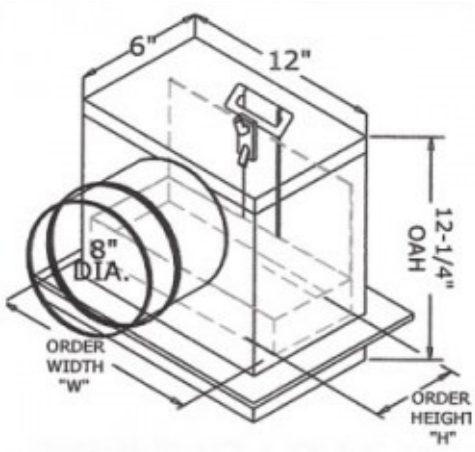


### NOTES:

- Manufactured with blades open as shown.
- Ceramic insulation is not required on damper blades with W x H areas less than 80 SQ/IN.
- Register/Grille supplied by other.

| Minimum Size (WxH) | Maximum Size (WxH) |
|---|---|
| 6"x6"x4" (collar) | 14"x6"x8" (collar) |


231 Commerce Dr. Montgomeryville, PA 18936
Tel: 215-412-4445 Fax: 215-412-4409
Email: lloydind@firedamper.com

138 Industrial Loop West, Orange Park, FL 32073
Tel: 904-541-1655 Fax: 904-541-1657
Email: lloydind1@firedamper.com

B1, 4/F., Luen Ming Hing Factory Building
36 Mok Cheong St.,
To Kwa Wan, Kowloon, H. K.
Tel: 852-2760-4188 Fax: 852-2760-4177
Email: tatanlexyim@lloydasia.com

Website: www.firedamper.com



*ALL STATED SPECIFICATIONS ARE SUBJECT TO UPDATE WITHOUT NOTICE OR OBLIGATION.





Lloyd Industries Inc. 2017

# UL Floor-Ceiling comparison Chart

| L563 | L521 | L528 | L546 | L550 | L579 |
|---|---|---|---|---|---|
| Fire resistance ratings ANSI/UL 263 | Same as L563 | Same as L563 | Same as L563 | Same as L563 | Same as L563 |
| Finish Flooring: Nom 1 by 4 in. T&G laid perpendicular to trusses or 15/32 in. thick wood structural panels min. grade "Underlayment" or "Single Floor" Long dimensions of panel (strength axis) or face grain of plywood to be perpendicular to trusses with joints staggered. | Same as L563 | Same as L563 | Same as L563 | Same as L563 | (Not shown) |
| Note: Flooring systems: Finish flooring may consist of any of the 16 Listed systems | 8 Listed systems | 16 Listed systems | 6 Listed systems | 2 Listed systems | (Not shown) |
| Vapor barrier: ( Optional)<br>Commercial asphalt saturated felt. 0.030 | Same as L563 | Same as L563 | Same as L563 | Same as L563 | Same as L563 |
| Subflooring:<br>23/32 in. Thick T&G wood structural panels. Installed perpendicular to trusses with end joint staggered 4 ft.<br>Plywood or non-veneer APA rated panels secured to trusses with and joint staggered 4ft. Plywood or<br>non-veneer APA rated panels secured to trusses with construction adhesive and no.6d ringed shank nails. Nails spaced 12in. on center along each truss. Staples having equal or greater withdrawal and lateral resistance strength may be substituted for the 6d nails. | Same as L563 | Same as L563 | Same as L563 | Same as L563 | Min 23/32 in. thick T & G wood structural panels installed perpendicular to trusses with joints staggered 4 ft. Plywood or nonveneer APA rated panels secured to trusses with construction adhesive and No. 6d ring shank nails spaced 12 in. OC along each truss. Staples having equal or greater withdrawal and lateral resistance strength may be substituted for the 6d nails. |
| Floor mat material:(Optional) 15 Listed systems | 6 Listed systems | 12 Listed systems | 4 Listed systems | 0 Listed systems | 2 Listed systems |
| Trusses:<br>Parallel cord trusses a max of 24 in. OC fabricated from nominal 2 x 4 lumber, with lumber oriented vertically or horizontally. Min truss depth is 18 in. Truss members secured together with min. 0.0356 in. thick galvanized steel plates. Plates have 5/16 in. long teeth projecting perpendicular to the plane of the plate. The teeth are in pairs facing each other (made by the same punch) forming a split tooth type plate. Each tooth has a chisel point on it's outside edge. These points are diagonally opposite each other for each pair. The top half of each tooth has a twist for stiffness. The pairs are repeated on approx. 7/8 in. centers with four rows of teeth per inch of plate width. | Same as L563 | Same as L563 | Same as L563 | Same as L563 | Same as L563 |
| Batts and Blankets: (optional)<br>Glass fiber insulation 3-1/2 in. Max. | Same as L563 | (Not shown) | Same as L563 | Same as L563 | Same as L563 |
| Air Duct:<br>Any UL Class 0 or Class 1 flexible air duct installed in accordance with the instructions provided by the damper manufacturer. | Same as L563 | (Not shown) | Same as L563 | Same as L563 | Same as L563 |
| Resilient Channels:<br>Nom. 1/2 in. deep by 2 in. wide at base and 1-1/4 in. wide at the face, formed from 1/4 in thick<br>galvanized steel spaced 16 in. OC | 1/2 in. deep x 2-3/8 in. x 0.020 in. thick galvanized steel spaced 16 in. OC | 0.022 in. thick galvanized steel spaced 16 in. OC | 3/8 in. deep x 2-3/8 in. x 1-3/8 in. 0.020 in. thick galvanized steel spaced 16 in. OC | 1/2 in. deep x 2-3/8 in. x 0.020 in. thick galvanized steel spaced 16 in. OC | 1/2 in. deep x 2-3/8 in. x 0.020 in. thick galvanized steel spaced 16 in. OC |
| Gypsum Board:<br>Nominal 5/8 in. thick x 48 in wide installed with long dimension perpendicular to resilient channel with 1-1/4 in. long type "S" screws spaced 12 in. on center | Gypsum Board: Nominal 5/8 in. thick x 48 in wide installed with long dimension perpendicular to resilient channel with 1 in. long type "S" screws spaced 12 in. on center | Gypsum Board: Nominal 5/8 in. thick x 48 in wide installed with long dimension perpendicular to resilient channel with 1 in. long type "S" screws spaced 12 in. on center | Gypsum Board: Nominal 5/8 in. thick x 48 in wide installed with long dimension perpendicular to resilient channel with 1 in. long type "S" screws spaced 12 in. on center | Gypsum Board: Nominal 5/8 in. thick x 48 in wide installed with long dimension perpendicular to resilient channel with 1 in. long type "S" screws spaced 12 in. on center | Gypsum Board: Nominal 5/8 in. thick x 48 in wide installed with long dimension perpendicular to resilient channel with 1 in. long type "S" screws spaced 12 in. on center |
| Unrestrained Assembly Rating:<br>1 hr.<br>Finish rating: 25 min. | Unrestrained Assembly Rating: 1 hr. Finish rating: 25 min. | Unrestrained Assembly Rating: 1 hr. Finish rating: 25 min. | Unrestrained Assembly Rating: 1 hr. Finish rating: 25 min. | Unrestrained Assembly Rating: 1 hr. Finish rating: 25 min. | Unrestrained Assembly Rating: 1 hr. Finish rating: 23 min. |

231 Commerce Dr. Montgomeryville, PA 18936
Tel: 215-412-4445 Fax: 215-412-4409
Email: lloydind@firedamper.com

138 Industrial Loop West, Orange Park, FL 32073
Tel: 904-541-1655 Fax: 904-541-1657
Email: lloydind1@firedamper.com

B1, 4/F., Luen Ming Hing Factory Building
36 Mok Cheong St.,
To Kwa Wan, Kowloon, H. K.
Tel: 852-2760-4188 Fax: 852-2760-4177
Email: tatanlexyim@lloydasia.com

Website: www.firedamper.com

*ALL STATED SPECIFICATIONS ARE SUBJECT TO UPDATE WITHOUT NOTICE OR OBLIGATION.



Lloyd Industries Inc. 2017

# Plenum Box Sizing Table

**Ceiling Radiation Damper with Fire Rated Fiberglass Plenum Box**
**Model:**
**K-CRD50-FGPB-6.0 & K-CRD50-FGPB-6.0-EA**
**1.50" Thick Fiberglass Ductboard Box**
**CRD50 & Standard Plenum Box Sizing Table**

| Ceiling radiation damper Nominal Order sizes Width x Height Inches "W" x "H" | "C" Maximum Collar Diameter | "A" Overall Plenum Box Width | "B" Overall Plenum Box Height | "D" Overall Plenum Box Vertical Dim. |
|---|---|---|---|---|
| 4x4 | 3 | 6-3/4 | 6-3/4 | 9 |
| 6x6 | 5 | 8-3/4 | 8-3/4 | 11 |
| 8x4 | 6 | 10-3/4 | 6-3/4 | 12 |
| 8x6 | 6 | 10-3/4 | 8-3/4 | 12 |
| 8x8 | 6 | 10-3/4 | 10-3/4 | 12 |
| 10x4 | 8 | 12-3/4 | 6-3/4 | 14 |
| 10x6 | 8 | 12-3/4 | 8-3/4 | 14 |
| 10x8 | 8 | 12-3/4 | 10-3/4 | 14 |
| 10x10 | 8 | 12-3/4 | 12-3/4 | 14 |
| 12x4 | 10 | 14-3/4 | 6-3/4 | 16 |
| 12x6 | 10 | 14-3/4 | 8-3/4 | 16 |
| 12x8 | 10 | 14-3/4 | 10-3/4 | 16 |
| 12x10 | 10 | 14-3/4 | 12-3/4 | 16 |
| 12x12 | 10 | 14-3/4 | 14-3/4 | 16 |
| 14x4 | 10 | 16-3/4 | 6-3/4 | 16 |
| 14x6 | 10 | 16-3/4 | 7-3/4 | 16 |
| 14x8 | 10 | 16-3/4 | 9-3/4 | 16 |
| 14x10 | 10 | 16-3/4 | 12-3/4 | 16 |
| 14x12 | 10 | 16-3/4 | 14-3/4 | 16 |
| 14x14 | 10 | 16-3/4 | 16-3/4 | 16 |
| 16x4 | 10 | 18-3/4 | 6-3/4 | 16 |
| 16x6 | 10 | 18-3/4 | 8-3/4 | 16 |
| 16x8 | 10 | 18-3/4 | 10-3/4 | 16 |
| 16x10 | 10 | 18-3/4 | 12-3/4 | 16 |
| 16x12 | 10 | 18-3/4 | 14-3/4 | 16 |
| 16x14 | 10 | 18-3/4 | 16-3/4 | 16 |
| 16x16 | 10 | 18-3/4 | 18-3/4 | 16 |

231 Commerce Dr. Montgomeryville, PA 18936
Tel: 215-412-4445 Fax: 215-412-4409
Email: lloydind@firedamper.com

138 Industrial Loop West, Orange Park, FL 32073
Tel: 904-541-1655 Fax: 904-541-1657
Email: lloydind1@firedamper.com

B1, 4/F., Luen Ming Hing Factory Building
36 Mok Cheong St.,
To Kwa Wan, Kowloon, H. K.
Tel: 852-2760-4188 Fax: 852-2760-4177
Email: tatanlexyim@lloydasia.com

Website: www.firedamper.com

*ALL STATED SPECIFICATIONS ARE SUBJECT TO UPDATE WITHOUT NOTICE OR OBLIGATION.



Lloyd Industries Inc. 2017

# Plenum Box Sizing Table

**Ceiling Radiation Damper with Fire Rated Fiberglass Plenum Box**
**Model:**
**K-CRD50-FGPB-4.2 & K-CRD50-FGPB-4.2-EA**
**1.00" Thick Fiberglass Ductboard Box**
**CRD50 & Standard Plenum Box Sizing Table**

| Ceiling radiation damper Nominal Order sizes Width x Height Inches "W" x "H" | "C" Maximum Collar Diameter | "A" Overall Plenum Box Width | "B" Overall Plenum Box Height | "D" Overall Plenum Box Vertical Dim. |
|---|---|---|---|---|
| 4x4 | 3 | 5-3/4 | 5-3/4 | 9 |
| 6x6 | 5 | 7-3/4 | 7-3/4 | 11 |
| 8x4 | 6 | 9-3/4 | 5-3/4 | 12 |
| 8x6 | 6 | 9-3/4 | 7-3/4 | 12 |
| 8x8 | 6 | 9-3/4 | 9-3/4 | 12 |
| 10x4 | 8 | 11-3/4 | 5-3/4 | 14 |
| 10x6 | 8 | 11-3/4 | 7-3/4 | 14 |
| 10x8 | 8 | 11-3/4 | 9-3/4 | 14 |
| 10x10 | 8 | 11-3/4 | 11-3/4 | 14 |
| 12x4 | 10 | 13-3/4 | 5-3/4 | 16 |
| 12x6 | 10 | 13-3/4 | 7-3/4 | 16 |
| 12x8 | 10 | 13-3/4 | 9-3/4 | 16 |
| 12x10 | 10 | 13-3/4 | 11-3/4 | 16 |
| 12x12 | 10 | 13-3/4 | 13-3/4 | 16 |
| 14x4 | 10 | 15-3/4 | 5-3/4 | 16 |
| 14x6 | 10 | 15-3/4 | 7-3/4 | 16 |
| 14x8 | 10 | 15-3/4 | 9-3/4 | 16 |
| 14x10 | 10 | 15-3/4 | 11-3/4 | 16 |
| 14x12 | 10 | 15-3/4 | 13-3/4 | 16 |
| 14x14 | 10 | 15-3/4 | 15-3/4 | 16 |
| 16x4 | 10 | 17-3/4 | 5-3/4 | 16 |
| 16x6 | 10 | 17-3/4 | 7-3/4 | 16 |
| 16x8 | 10 | 17-3/4 | 9-3/4 | 16 |
| 16x10 | 10 | 17-3/4 | 11-3/4 | 16 |
| 16x12 | 10 | 17-3/4 | 13-3/4 | 16 |
| 16x14 | 10 | 17-3/4 | 15-3/4 | 16 |
| 16x16 | 10 | 17-3/4 | 17-3/4 | 16 |

231 Commerce Dr. Montgomeryville, PA 18936
Tel: 215-412-4445 Fax: 215-412-4409
Email: lloydind@firedamper.com

138 Industrial Loop West, Orange Park, FL 32073
Tel: 904-541-1655 Fax: 904-541-1657
Email: lloydind1@firedamper.com

B1, 4/F., Luen Ming Hing Factory Building
36 Mok Cheong St.,
To Kwa Wan, Kowloon, H. K.
Tel: 852-2760-4188 Fax: 852-2760-4177
Email: tatanlexyim@lloydasia.com

Website: www.firedamper.com

*ALL STATED SPECIFICATIONS ARE SUBJECT TO UPDATE WITHOUT NOTICE OR OBLIGATION.



Lloyd Industries Inc. 2017

# Insulated Plenum Box & Duct Sizing Table

**Model:**
**CRD55-BT-T-6.0 (Top Outlet)**
**CRD with Top-ducting-outlet & Insulated plenum box**

| Register Order sizes Width x Height Inches "W" x "H" | "C" Collar Oder size for duct Diameter | "A" Overall box Width | "B" Overall box Height | "D" dimension insulated box Height |
|---|---|---|---|---|
| 8x4 | 4 | 11 | 7 | 4.5 |
| 8x4 | 5 | 11 | 7 | 4.5 |
| 8x8 | 6 | 11 | 11 | 4.5 |
| 8x8 | 7 | 11 | 11 | 4.5 |
| 8x8 | 8 | 11 | 11 | 4.5 |
| 10x6 | 5 | 13 | 9 | 4.5 |
| 10x6 | 6 | 13 | 9 | 4.5 |
| 10x6 | 7 | 13 | 9 | 4.5 |
| 10x10 | 6 | 13 | 13 | 4.5 |
| 10x10 | 7 | 13 | 13 | 4.5 |
| 10x10 | 8 | 13 | 13 | 4.5 |
| 10x10 | 9 | 13 | 13 | 4.5 |
| 12x6 | 6 | 15 | 9 | 4.5 |
| 12x6 | 7 | 15 | 9 | 4.5 |
| 12x6 | 8 | 15 | 9 | 4.5 |
| 12x8 | 6 | 15 | 11 | 4.5 |
| 12x8 | 7 | 15 | 11 | 4.5 |
| 12x8 | 8 | 15 | 11 | 4.5 |
| 12x8 | 9 | 15 | 11 | 4.5 |
| 12x12 | 8 | 15 | 15 | 4.5 |
| 12x12 | 9 | 15 | 15 | 4.5 |
| 12x12 | 10 | 15 | 15 | 4.5 |
| 12x12 | 12 | 15 | 15 | 4.5 |
| 14x6 | 6 | 17 | 9 | 4.5 |
| 14x6 | 7 | 17 | 9 | 4.5 |
| 14x6 | 8 | 17 | 9 | 4.5 |
| 14x6 | 9 | 17 | 9 | 4.5 |
| 14x8 | 7 | 17 | 11 | 4.5 |
| 14x8 | 8 | 17 | 11 | 4.5 |
| 14x8 | 9 | 17 | 11 | 4.5 |
| 14x8 | 10 | 17 | 11 | 4.5 |
| 14x8 | 12 | 17 | 11 | 4.5 |
| 14x10 | 10 | 17 | 13 | 4.5 |
| 14x10 | 12 | 17 | 13 | 4.5 |
| 14x14 | 10 | 17 | 17 | 4.5 |
| 14x14 | 12 | 17 | 17 | 4.5 |
| 14x14 | 14 | 17 | 17 | 4.5 |

Note: Overall assembly height="D" dimension +.625

231 Commerce Dr. Montgomeryville, PA 18936
Tel: 215-412-4445 Fax: 215-412-4409
Email: lloydind@firedamper.com

138 Industrial Loop West, Orange Park, FL 32073
Tel: 904-541-1655 Fax: 904-541-1657
Email: lloydind1@firedamper.com

B1, 4/F., Luen Ming Hing Factory Building
36 Mok Cheong St.,
To Kwa Wan, Kowloon, H. K.
Tel: 852-2760-4188 Fax: 852-2760-4177
Email: tatanlexyim@lloydasia.com

Website: www.firedamper.com

*ALL STATED SPECIFICATIONS ARE SUBJECT TO UPDATE WITHOUT NOTICE OR OBLIGATION.



Lloyd Industries Inc. 2017

# Non-Insulated Plenum Box & Duct Sizing Table

**Model:**
**CRD50-NI-BT-26GS (Side Outlet) & CRD50-EA-NI-BT-26GS (Side Outlet)**
**CRD with side-ducting-outlet & Non-Insulated plenum box**

| Damper Order sizes Width x Height Inches "W" x "H" | "C" Collar Oder size for duct Diameter | "A" Overall box Width | "B" Overall box Depth | "D" dimension Non-insulated box Height |
|---|---|---|---|---|
| 8x4 | 4 | 8 | 4 | 9 |
| 8x8 | 6 | 8 | 8 | 11 |
| 8x8 | 7 | 8 | 8 | 12 |
| 8x8 | 8 | 8 | 8 | 13 |
| 10x6 | 5 | 10 | 6 | 10 |
| 10x6 | 6 | 10 | 6 | 11 |
| 10x6 | 7 | 10 | 6 | 12 |
| 10x8 | 7 | 10 | 8 | 12 |
| 10x8 | 8 | 10 | 8 | 13 |
| 10x10 | 7 | 10 | 10 | 12 |
| 10x10 | 8 | 10 | 10 | 13 |
| 10x10 | 9 | 10 | 10 | 14 |
| 12x6 | 6 | 12 | 6 | 11 |
| 12x6 | 7 | 12 | 6 | 12 |
| 12x6 | 8 | 12 | 6 | 13 |
| 12x8 | 6 | 12 | 8 | 11 |
| 12x8 | 7 | 12 | 8 | 12 |
| 12x8 | 8 | 12 | 8 | 13 |
| 12x12 | 8 | 12 | 12 | 13 |
| 12x12 | 9 | 12 | 12 | 14 |
| 12x12 | 10 | 12 | 12 | 15 |
| 12x12 | 12 | 12 | 12 | 17 |
| 14x6 | 6 | 14 | 6 | 11 |
| 14x6 | 7 | 14 | 6 | 12 |
| 14x6 | 8 | 14 | 6 | 13 |
| 14x8 | 7 | 14 | 8 | 12 |
| 14x8 | 8 | 14 | 8 | 13 |
| 14x8 | 9 | 14 | 8 | 14 |
| 14x10 | 8 | 14 | 10 | 13 |
| 14x10 | 9 | 14 | 10 | 14 |
| 14x10 | 10 | 14 | 10 | 15 |
| 14x14 | 10 | 14 | 14 | 15 |
| 14x14 | 12 | 14 | 14 | 17 |

231 Commerce Dr. Montgomeryville, PA 18936
Tel: 215-412-4445 Fax: 215-412-4409
Email: lloydind@firedamper.com

138 Industrial Loop West, Orange Park, FL 32073
Tel: 904-541-1655 Fax: 904-541-1657
Email: lloydind1@firedamper.com

B1, 4/F., Luen Ming Hing Factory Building
36 Mok Cheong St.,
To Kwa Wan, Kowloon, H. K.
Tel: 852-2760-4188 Fax: 852-2760-4177
Email: tatanlexyim@lloydasia.com

Website: www.firedamper.com

*ALL STATED SPECIFICATIONS ARE SUBJECT TO UPDATE WITHOUT NOTICE OR OBLIGATION.



Lloyd Industries Inc. 2017

# Insulated Plenum Box & Duct Sizing Table

**Model:**
**CRD50-BT-6.0 (Side Outlet) & CRD50-BTT-6.0 (Top Outlet)**
**CRD with side or top ducting-outlet & Insulated plenum box**

| Register Order sizes Width x Height Inches "W" x "H" | "C" Collar Oder size for duct Diameter | "A" Overall box Width | "B" Overall box Height | "D" dimension insulated box Height |
|---|---|---|---|---|
| 4x8 | 4 | 7 | 11 | 9 |
| 8x4 | 4 | 11 | 7 | 9 |
| 8x4 | 5 | 11 | 7 | 10 |
| 8x8 | 6 | 11 | 11 | 11 |
| 8x8 | 7 | 11 | 11 | 12 |
| 8x8 | 8 | 11 | 11 | 13 |
| 6x10 | 5 | 9 | 13 | 10 |
| 6x10 | 6 | 9 | 13 | 11 |
| 10x6 | 5 | 13 | 9 | 10 |
| 10x6 | 6 | 13 | 9 | 11 |
| 10x6 | 7 | 13 | 9 | 12 |
| 10x10 | 6 | 13 | 13 | 11 |
| 10x10 | 7 | 13 | 13 | 12 |
| 10x10 | 8 | 13 | 13 | 13 |
| 10x10 | 9 | 13 | 13 | 14 |
| 6x12 | 6 | 9 | 15 | 11 |
| 12x6 | 6 | 15 | 9 | 11 |
| 12x6 | 7 | 15 | 9 | 12 |
| 12x6 | 8 | 15 | 9 | 13 |
| 8x12 | 6 | 11 | 15 | 11 |
| 8x12 | 7 | 11 | 15 | 12 |
| 8x12 | 8 | 11 | 15 | 13 |
| 12x8 | 6 | 15 | 11 | 11 |
| 12x8 | 7 | 15 | 11 | 12 |
| 12x8 | 8 | 15 | 11 | 13 |
| 12x8 | 9 | 15 | 11 | 14 |
| 12x12 | 8 | 15 | 15 | 13 |
| 12x12 | 9 | 15 | 15 | 14 |
| 12x12 | 10 | 15 | 15 | 15 |
| 12x12 | 12 | 15 | 15 | 17 |
| 6x14 | 6 | 9 | 17 | 11 |
| 14x6 | 6 | 17 | 9 | 12 |
| 14x6 | 7 | 17 | 9 | 12 |
| 14x6 | 8 | 17 | 9 | 13 |
| 14x6 | 9 | 17 | 9 | 14 |
| 8x14 | 7 | 11 | 17 | 12 |
| 8x14 | 8 | 11 | 17 | 13 |
| 10x14 | 8 | 13 | 17 | 13 |
| 10x14 | 10 | 13 | 17 | 15 |
| 14x8 | 7 | 17 | 11 | 12 |
| 14x8 | 8 | 17 | 11 | 13 |
| 14x8 | 9 | 17 | 11 | 14 |
| 14x8 | 10 | 17 | 11 | 15 |
| 14x8 | 12 | 17 | 11 | 17 |
| 14x10 | 10 | 17 | 13 | 15 |
| 14x10 | 12 | 17 | 13 | 17 |
| 14x14 | 10 | 17 | 17 | 15 |
| 14x14 | 12 | 17 | 17 | 17 |

Note: Overall assembly height="D" dimension +.625

231 Commerce Dr. Montgomeryville, PA 18936
Tel: 215-412-4445 Fax: 215-412-4409
Email: lloydind@firedamper.com

138 Industrial Loop West, Orange Park, FL 32073
Tel: 904-541-1655 Fax: 904-541-1657
Email: lloydind1@firedamper.com

B1, 4/F., Luen Ming Hing Factory Building
36 Mok Cheong St.,
To Kwa Wan, Kowloon, H. K.
Tel: 852-2760-4188 Fax: 852-2760-4177
Email: tatanlexyim@lloydasia.com

Website: www.firedamper.com

*ALL STATED SPECIFICATIONS ARE SUBJECT TO UPDATE WITHOUT NOTICE OR OBLIGATION.



Lloyd Industries Inc. 2017

# CEILING THERMAL BLANKET

**MODEL:**
**CTB-24 & CTB-28**

## APPLICATION

Ceiling thermal blankets are for field installation on the back of steel "lay-in" diffusers, or tapered neck diffusers in ceiling applications. 24" x 24" and 28" x 28" are available with and without scrim.

CLASSIFIED UL
THIS PRODUCT HAS BEEN TESTED & APPROVED BY UNDERWRITERS LABORATORIES INC.
THIS PRODUCT CONFORMS TO THE REQUIREMENTS OF UNDERWRITERS LABORATORIES SPECIFICATION UL 555C FOR CEILING RADIATION DAMPERS

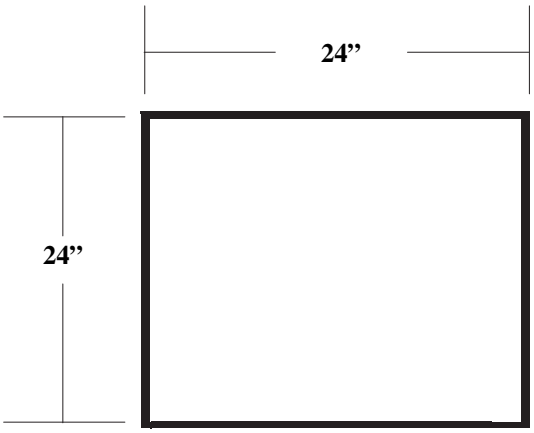


CTB-24:
- 1/4" thick, 8 lb. density ceramic fiber
- 24" x 24" face size
- For use with UL– classified ceiling radiation dampers

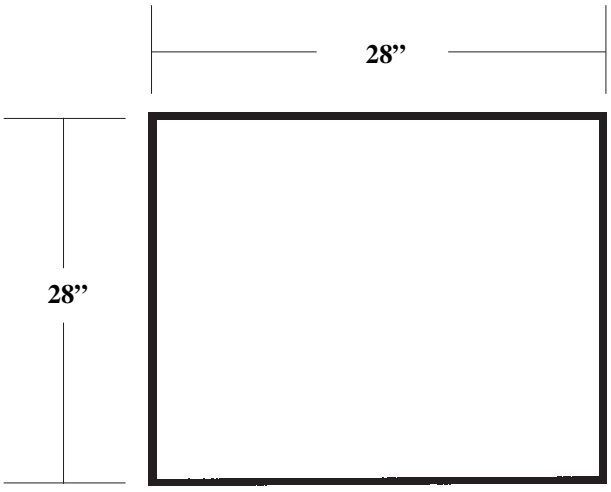


CTB-28:
- 1/4" thick, 8 lb. density ceramic fiber
- 28" x 28" face size
- For use with UL– classified ceiling radiation dampers

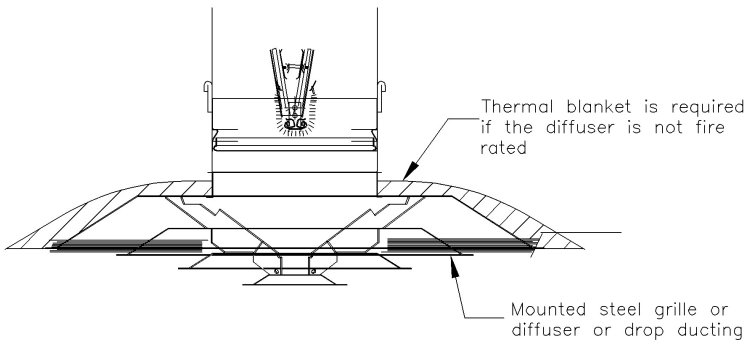


231 Commerce Dr. Montgomeryville, PA 18936
Tel: 215-412-4445 Fax: 215-412-4409
Email: lloydind@firedamper.com

138 Industrial Loop West, Orange Park, FL 32073
Tel: 904-541-1655 Fax: 904-541-1657
Email: lloydind1@firedamper.com

B1, 4/F., Luen Ming Hing Factory Building
36 Mok Cheong St.,
To Kwa Wan, Kowloon, H. K.
Tel: 852-2760-4188 Fax: 852-2760-4177
Email: tatanlexyim@lloydasia.com

Website: www.firedamper.com

*ALL STATED SPECIFICATIONS ARE SUBJECT TO UPDATE WITHOUT NOTICE OR OBLIGATION.



Lloyd Industries Inc. 2017

# ACCESS DOORS



**MODEL:**
**FRAD-V**

## APPLICATION

FRAD-V Access Doors provide an economical way to access components installed behind vertical partitions or walls with fire resistance ratings up to 2 hours.

**UL 10B FIRE RESISTANCE RATING:1-1/2 HOUR**

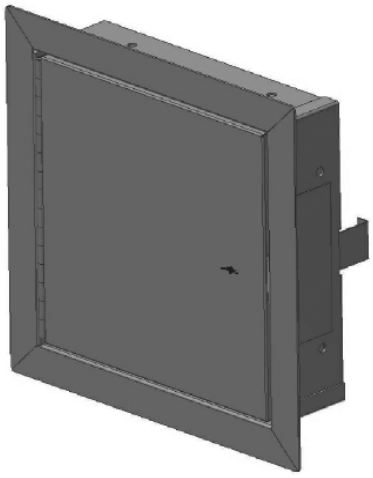

## Standard Construction

| | |
|---|---|
| **Frame:** | 16 Gauge steel |
| **Door Panel:** | 20 Gauge steel |
| **Finish:** | Power coat or galvanized steel |
| **Insulation:** | 2" Ceramic blanket between inner and outer door panels |
| **Hinge:** | Continuous piano type |
| **Automatic closure:** | Coil spring with self latching slam latch |

| Internal Latch Release | |
|---|---|
| Minimum Size (WxH) | Maximum Size (WxH) |
| 8”x8” | 24"x24" |

ACCESS FRAME AND FIRE DOOR ASSEMBLY
FIRE RESISTSNCE CLASSIFICATION
RATING: 1-1/2 HOURS
TEMP RISE: 30 MIN -250'F MAX

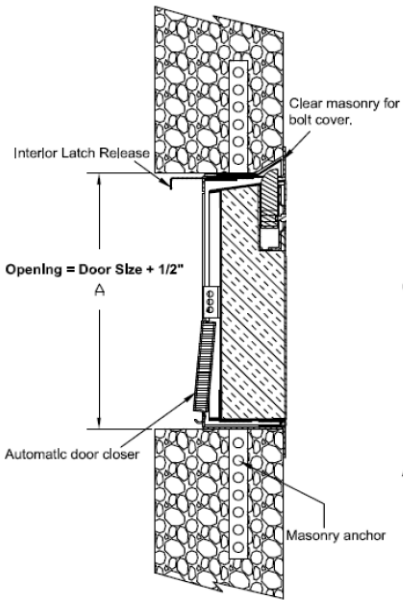


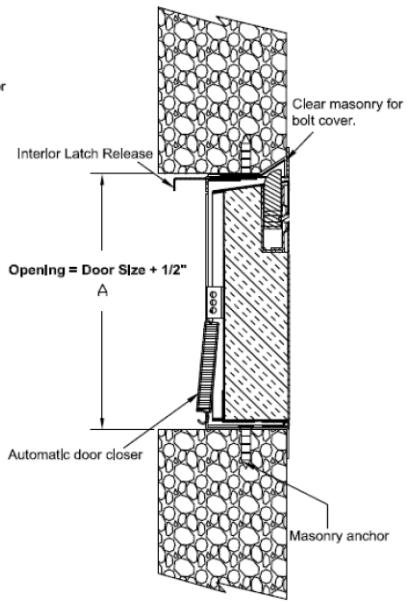


**TYPICAL STUD WALL INSTALLATION**

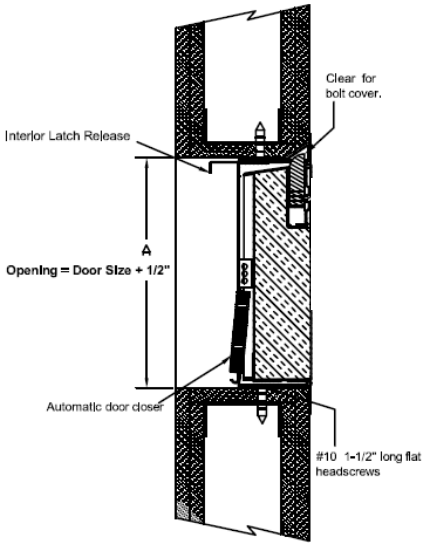


231 Commerce Dr. Montgomeryville, PA 18936
Tel: 215-412-4445 Fax: 215-412-4409
Email: lloydind@firedamper.com

138 Industrial Loop West, Orange Park, FL 32073
Tel: 904-541-1655 Fax: 904-541-1657
Email: lloydind1@firedamper.com

B1, 4/F., Luen Ming Hing Factory Building
36 Mok Cheong St.,
To Kwa Wan, Kowloon, H. K.
Tel: 852-2760-4188 Fax: 852-2760-4177
Email: tatanlexyim@lloydasia.com

Website: www.firedamper.com

*ALL STATED SPECIFICATIONS ARE SUBJECT TO UPDATE WITHOUT NOTICE OR OBLIGATION.



Lloyd Industries Inc. 2017

**1-1/2 HOUR FIRE RATED ACCESS PANEL**
**INSTALLATION INSTRUCTIONS**

# STUD WALL INSTALLATION DETAIL

1. Opening to be 1/2" larger than catalog size listed, i.e. 8" x 8" will require a 8-1/2" x 8-1/2" opening. A notched area is required for lock bolt clearance.
2. Frame above and below access door.
3. Install double studs on both sides for doors larger than 16 x 16
4. Position door in opening mark hole locations on wall using holes in hinge side and latch side of door frame.
4. Place door in opening attach with #10 1-1/2 long flat head screws or equivalent flat head fastener.
6. Check operation of door shim if necessary to remove any racking of frame..



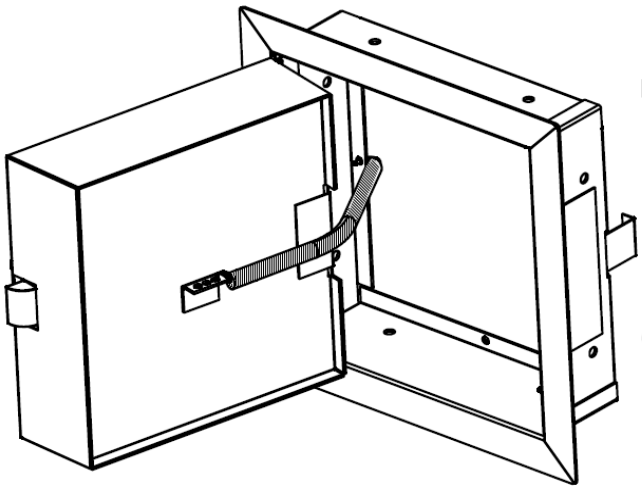

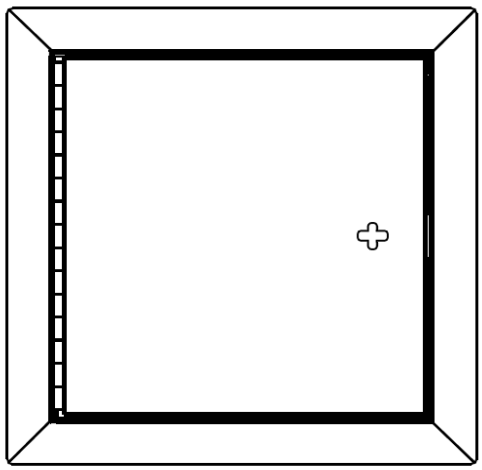

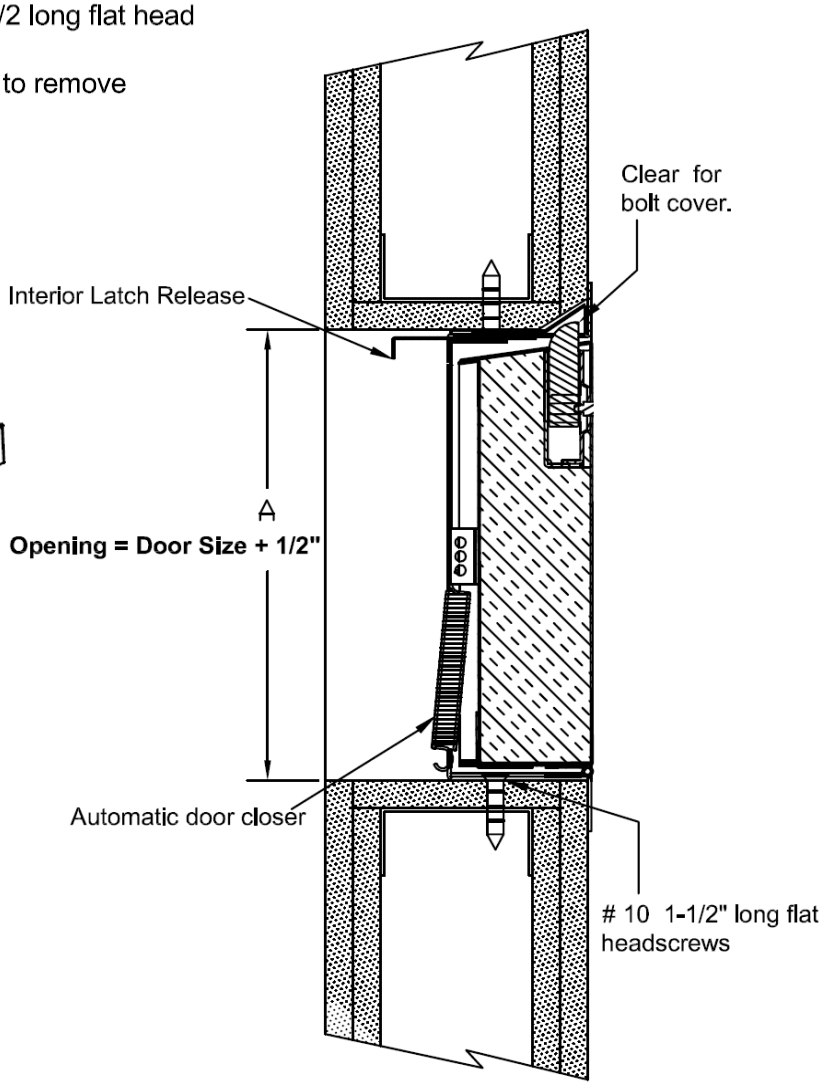


231 Commerce Dr. Montgomeryville, PA 18936
Tel: 215-412-4445 Fax: 215-412-4409
Email: lloydind@firedamper.com

138 Industrial Loop West, Orange Park, FL 32073
Tel: 904-541-1655 Fax: 904-541-1657
Email: lloydind1@firedamper.com

B1, 4/F., Luen Ming Hing Factory Building
36 Mok Cheong St.,
To Kwa Wan, Kowloon, H. K.
Tel: 852-2760-4188 Fax: 852-2760-4177
Email: tatanlexyim@lloydasia.com

Website: www.firedamper.com

*ALL STATED SPECIFICATIONS ARE SUBJECT TO UPDATE WITHOUT NOTICE OR OBLIGATION.



Lloyd Industries Inc. 2017

# 1-1/2 HOUR FIRE RATED ACCESS PANEL INSTALLATION INSTRUCTIONS

## MASONRY INSTALLATION DETAIL

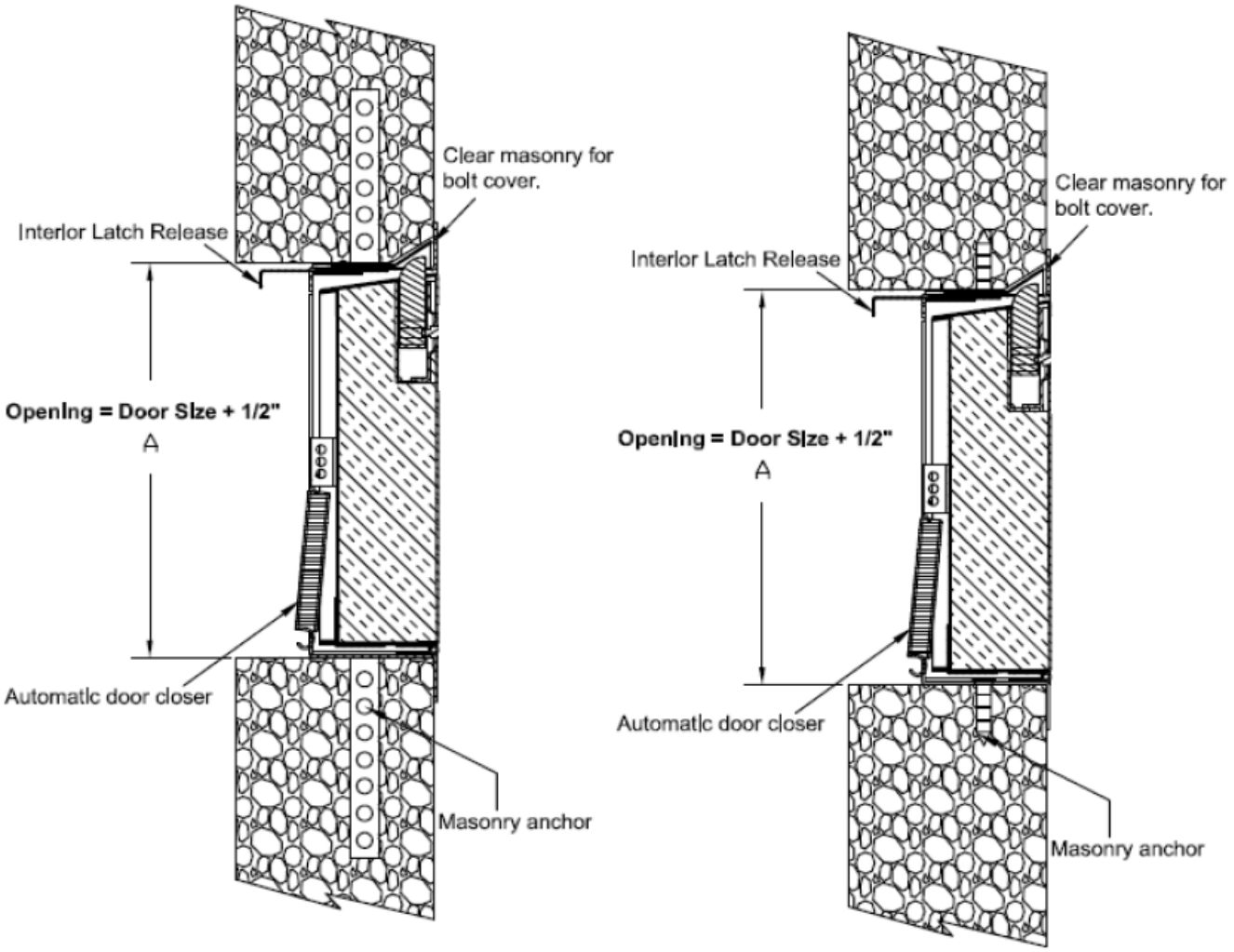


1. Opening to be 1/2" larger than catalog size listed, i.e. 8" x 8" will require a 8-1/2" x 8-1/2" opening. A notched area is required for lock bolt clearance.
2. For walls under construction unfold masonry anchors from frame to attachment.
3. For walls already in place, position door in opening mark hole locations on wall using holes in hinge side and latch side of door frame.
4. Remove door and install expansion shields at marked locations.
5. Place door in opening attach with masonry anchors
6. Check operation of door shim if necessary to remove any racking of frame..

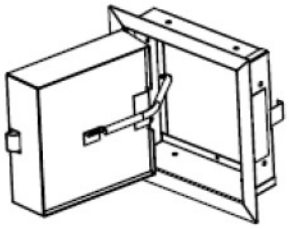

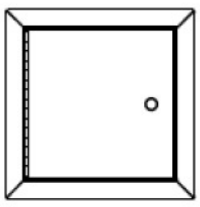

Information and specifications are subject to change without notice or obligation

231 Commerce Dr. Montgomeryville, PA 18936
Tel: 215-412-4445 Fax: 215-412-4409
Email: lloydind@firedamper.com

138 Industrial Loop West, Orange Park, FL 32073
Tel: 904-541-1655 Fax: 904-541-1657
Email: lloydind1@firedamper.com

B1, 4/F., Luen Ming Hing Factory Building
36 Mok Cheong St.,
To Kwa Wan, Kowloon, H. K.
Tel: 852-2760-4188 Fax: 852-2760-4177
Email: tatanlexyim@lloydasia.com

Website: www.firedamper.com



Lloyd Industries Inc. 2017

# ACCESS DOORS



**Model 20-HAD**

**MODEL:**
**20-HAD**
**25-CAD**

Standard models are 1” thick hinged or double cam lock insulated doors.

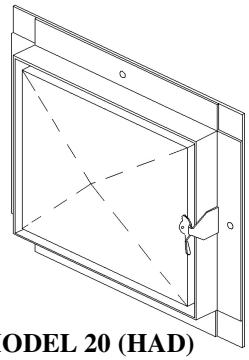

**MODEL 20 (HAD)**
Hinged 1” access door with insulation

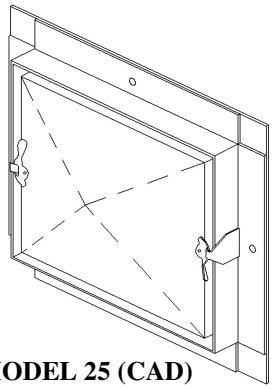

**MODEL 25 (CAD)**
Double cam 1” access door with insulation

## Standard Construction

| | |
|---|---|
| **Frame:** | 22 GA. galvanized steel |
| **Door Panel:** | 26 GA. galvanized steel |
| **Finish:** | Galvanized steel |

1" Thick hinged access door with flange
Frame 22 GA. galvanized steel
1" Outboard flange all(4) sides
1/8' X 1-1/2' Pressure sensitive foam tape (4) sides
1/8" X 1/2" Inside door seal

**Optional Material:**
Aluminum or stainless steel

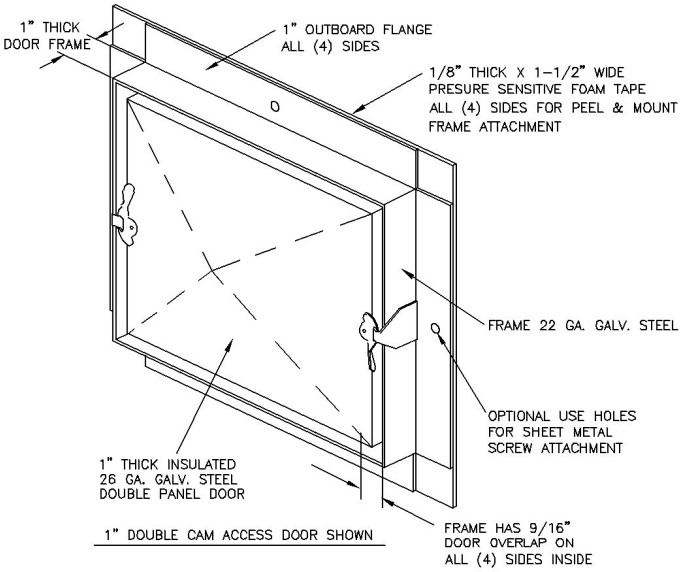


NOTE:
1. Hinged doors over 14” x 14” have 3 cam latches. Double cam doors over 14” x 14” have 4 cam latches.
2. All models include 1/8” thick x 1/2” wide door-to-frame gasket.

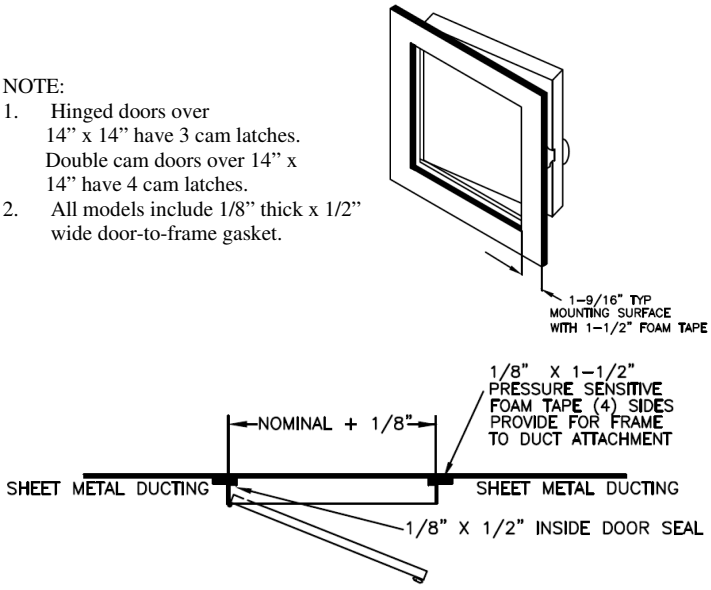


231 Commerce Dr. Montgomeryville, PA 18936
Tel: 215-412-4445 Fax: 215-412-4409
Email: lloydind@firedamper.com

138 Industrial Loop West, Orange Park, FL 32073
Tel: 904-541-1655 Fax: 904-541-1657
Email: lloydind1@firedamper.com

B1, 4/F., Luen Ming Hing Factory Building
36 Mok Cheong St.,
To Kwa Wan, Kowloon, H. K.
Tel: 852-2760-4188 Fax: 852-2760-4177
Email: tatanlexyim@lloydasia.com

Website: www.firedamper.com

*ALL STATED SPECIFICATIONS ARE SUBJECT TO UPDATE WITHOUT NOTICE OR OBLIGATION.



Lloyd Industries Inc. 2017

# ACCESS DOORS

**MODEL:**
**60-RHAD**
**65-RCAD**

Standard models are 1” thick hinged or double cam lock insulated doors.



**60-RHAD**

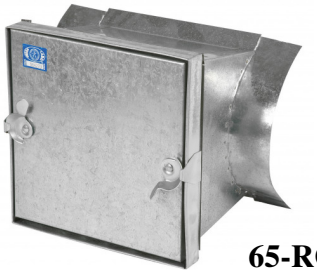

**65-RCAD**

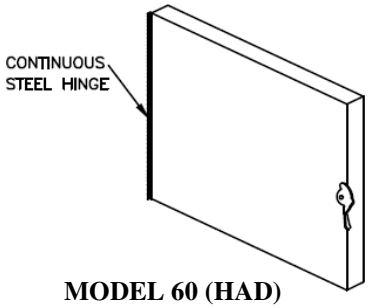


**MODEL 60 (HAD)**
Hinged 1” access door with insulation

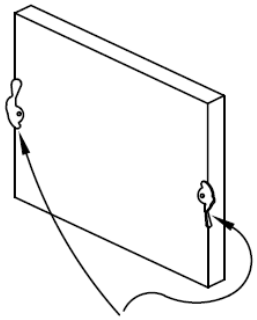

**MODEL 65 (CAD)**
Double cam 1” access door with insulation

## Standard Construction

| | |
|---|---|
| **Frame:** | 22 Ga. galvanized steel |
| **Door Panel:** | 22 Ga. galvanized steel |
| **Finish:** | Galvanized steel |

1" Thick double cam round duct access door
Double panel door
Frame 26 Ga. galvanized steel
Varied duct diameter radius
1/4' X 1/2' Wide gasketing

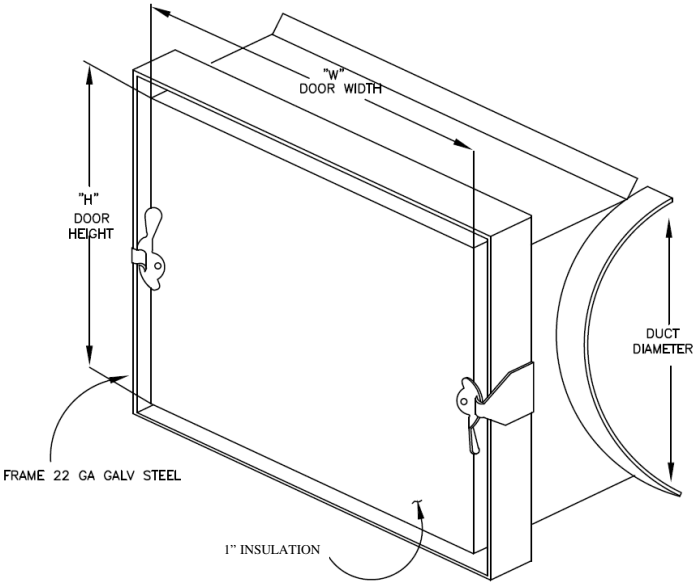


NOTE:
1. Hinged doors over 14” x 14” have 3 cam latches. Double cam doors over 14” x 14” have 4 cam latches.
2. All models include 1/8” thick x 1/2” wide door-to-frame gasket.

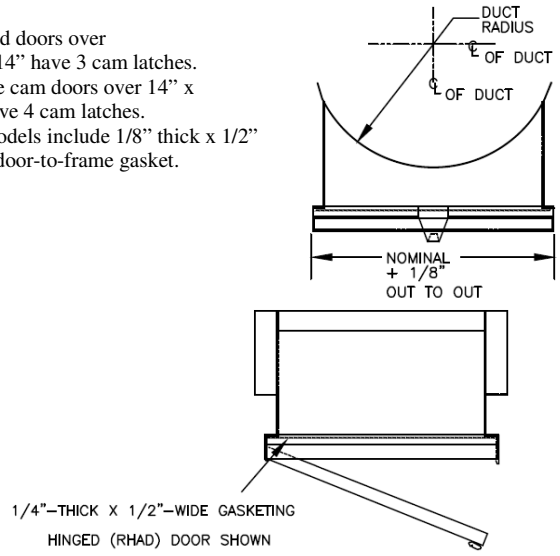


**Optional Material:**
Aluminum or stainless steel

231 Commerce Dr. Montgomeryville, PA 18936
Tel: 215-412-4445 Fax: 215-412-4409
Email: lloydind@firedamper.com

138 Industrial Loop West, Orange Park, FL 32073
Tel: 904-541-1655 Fax: 904-541-1657
Email: lloydind1@firedamper.com

B1, 4/F., Luen Ming Hing Factory Building
36 Mok Cheong St.,
To Kwa Wan, Kowloon, H. K.
Tel: 852-2760-4188 Fax: 852-2760-4177
Email: tatanlexyim@lloydasia.com

Website: www.firedamper.com

*ALL STATED SPECIFICATIONS ARE SUBJECT TO UPDATE WITHOUT NOTICE OR OBLIGATION.



Lloyd Industries Inc. 2017

# ACCESS DOORS

**MODEL:**
**60-HAD**
**65-CAD**



**60-HAD**



**65-CAD**

Standard models are 1” thick hinged or double cam lock insulated doors.

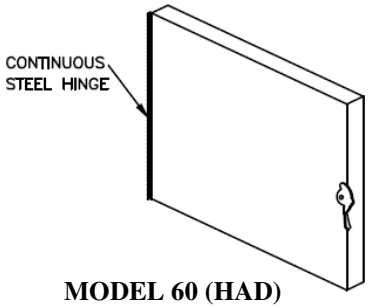


**MODEL 60 (HAD)**
Hinged 1” access door with insulation

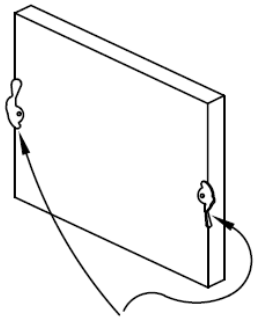

**MODEL 65 (CAD)**
Double cam 1” access door with insulation

## Standard Construction

| | |
|---|---|
| **Frame:** | 26 Ga. galvanized steel |
| **Door Panel:** | 26 Ga. galvanized steel |
| **Finish:** | Galvanized steel |

1" Thick hinged access door with flange
Frame 22 Ga. galvanized steel
5/8" Long notched knock-over edges standard
1/8' X 1/2' Wide door to frame standard gasketing

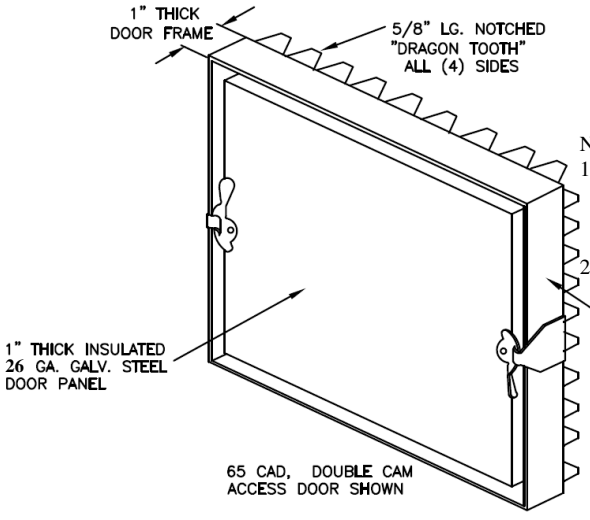


NOTE:
1. Hinged doors over 14” x 14” have 3 cam latches. Double cam doors over 14” x 14” have 4 cam latches.
2. All models include 1/8” thick x 1/2” wide door-to-frame gasket.

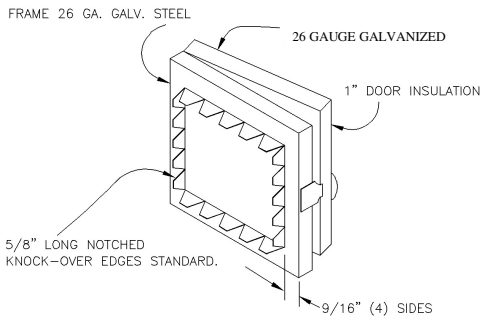


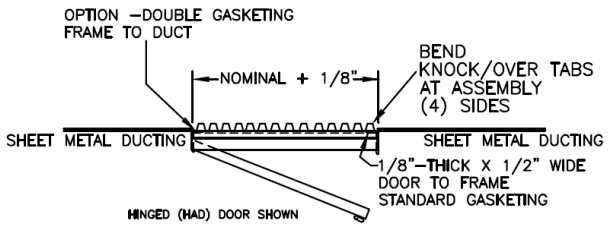


STANDARD FRAME

OPTIONS:
1” extension for 1” thick duct board ducting
1-1/2” extension for 1-1/2” thick duct board ducting
Double gasket for frame to duct gasket
Aluminum or stainless steel

231 Commerce Dr. Montgomeryville, PA 18936
Tel: 215-412-4445 Fax: 215-412-4409
Email: lloydind@firedamper.com

138 Industrial Loop West, Orange Park, FL 32073
Tel: 904-541-1655 Fax: 904-541-1657
Email: lloydind1@firedamper.com

B1, 4/F., Luen Ming Hing Factory Building
36 Mok Cheong St.,
To Kwa Wan, Kowloon, H. K.
Tel: 852-2760-4188 Fax: 852-2760-4177
Email: tatanlexyim@lloydasia.com

Website: www.firedamper.com

*ALL STATED SPECIFICATIONS ARE SUBJECT TO UPDATE WITHOUT NOTICE OR OBLIGATION.



Lloyd Industries Inc. 2017

# ACCESS DOORS

**MODEL:**
**60-WHAD**
**65-WCAD**



**60-WHAD**



**65-WCAD**

Standard models are 1” thick hinged or double cam lock viewing doors.

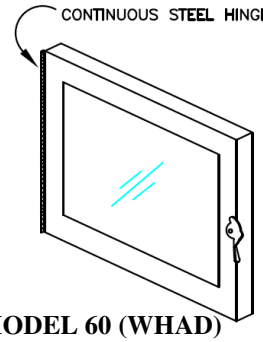


**MODEL 60 (WHAD)**
Hinged 1” access door with viewing window

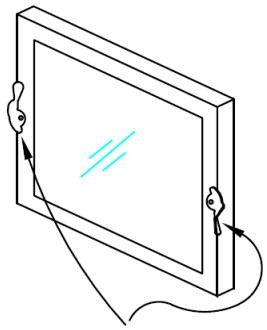

**MODEL 65 (WCAD)**
Double cam 1” access door with viewing window

## Standard Construction

| | |
|---|---|
| **Frame:** | 26 Ga. galvanized steel |
| **Door Panel:** | 26 Ga. galvanized steel |
| **Finish:** | Galvanized steel |

1" Thick hinged access door with flange
Double panel door
Frame 26 Ga. galvanized steel
5/8" Long notched knock-over edges standard
1/8' X 1/2' Wide door to frame standard gasketing
1/4" Thick Plexiglas

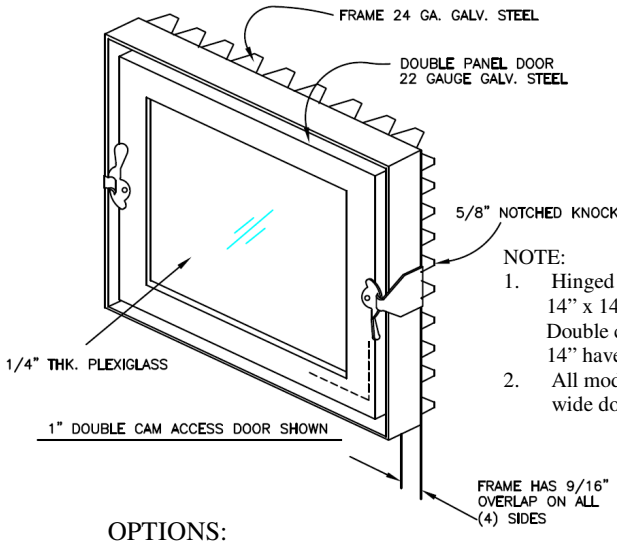


NOTE:
1. Hinged doors over 14” x 14” have 3 cam latches. Double cam doors over 14” x 14” have 4 cam latches.
2. All models include 1/8” thick x 1/2” wide door-to-frame gasket.

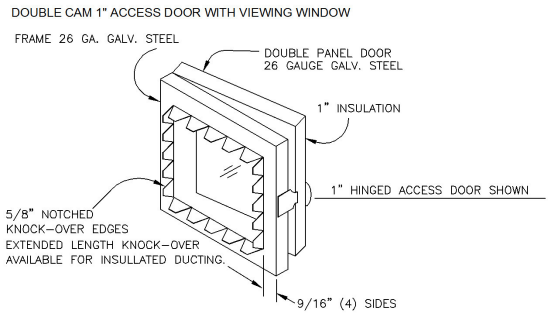


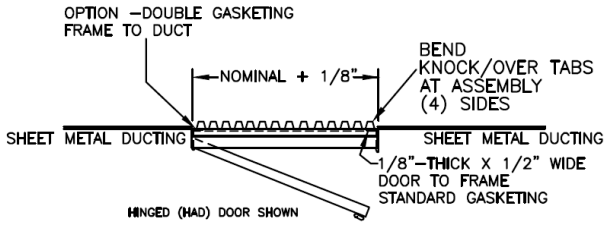


OPTIONS:
1” extension for 1” thick duct board ducting
1-1/2” extension for 1-1/2” thick duct board ducting
Double gasket for frame to duct gasket
Aluminum or stainless steel

231 Commerce Dr. Montgomeryville, PA 18936
Tel: 215-412-4445 Fax: 215-412-4409
Email: lloydind@firedamper.com

138 Industrial Loop West, Orange Park, FL 32073
Tel: 904-541-1655 Fax: 904-541-1657
Email: lloydind1@firedamper.com

B1, 4/F., Luen Ming Hing Factory Building
36 Mok Cheong St.,
To Kwa Wan, Kowloon, H. K.
Tel: 852-2760-4188 Fax: 852-2760-4177
Email: tatanlexyim@lloydasia.com

Website: www.firedamper.com

*ALL STATED SPECIFICATIONS ARE SUBJECT TO UPDATE WITHOUT NOTICE OR OBLIGATION.



Lloyd Industries Inc. 2017

# ACCESS DOORS

**MODEL:**
**80-HAD**
**85-CAD**

Flush mount, corrosion resistant extruded aluminum construction .
Hinged and no-hinged locking access doors.



**80-HAD**



**85-CAD**

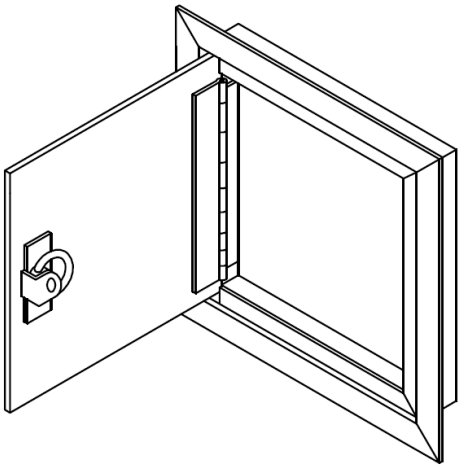

**MODEL 80 (HAD)**
Hinged, flush door and flush mount access door with slotted or keyed locks

## Standard construction

| | |
|---|---|
| **Frame:** | Extruded aluminum |
| **Door Panel:** | Extruded aluminum 0.80 (14Ga.) |
| **Finish:** | Mill finished aluminum (Standard) |
| | Anodized finish (Request only) |
| | Paint |

1" Thick hinged access door with flange
Double panel door
Aluminum
1-1/4" Flange 4 sides

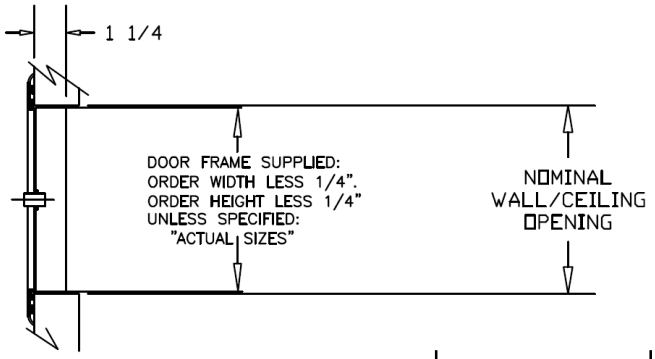


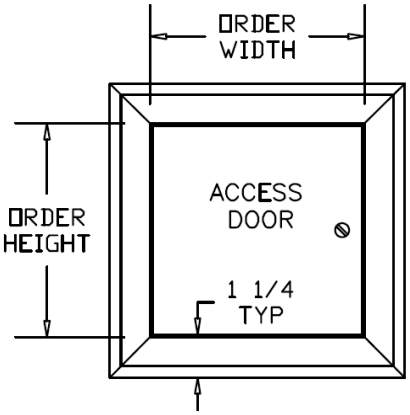


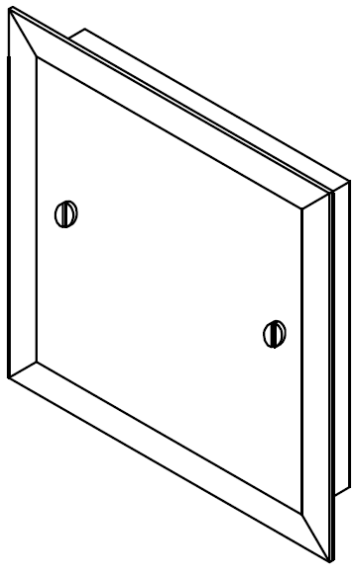

**MODEL 85 (CAD)**
Hinge-less, flush door and flush mount access door with multiple slotted or keyed locks for door closure.
Used where obstruction prevent opening hinged door.

231 Commerce Dr. Montgomeryville, PA 18936
Tel: 215-412-4445 Fax: 215-412-4409
Email: lloydind@firedamper.com

138 Industrial Loop West, Orange Park, FL 32073
Tel: 904-541-1655 Fax: 904-541-1657
Email: lloydind1@firedamper.com

B1, 4/F., Luen Ming Hing Factory Building
36 Mok Cheong St.,
To Kwa Wan, Kowloon, H. K.
Tel: 852-2760-4188 Fax: 852-2760-4177
Email: tatanlexyim@lloydasia.com

Website: www.firedamper.com

*ALL STATED SPECIFICATIONS ARE SUBJECT TO UPDATE WITHOUT NOTICE OR OBLIGATION.



Lloyd Industries Inc. 2017

# ACCESS DOORS

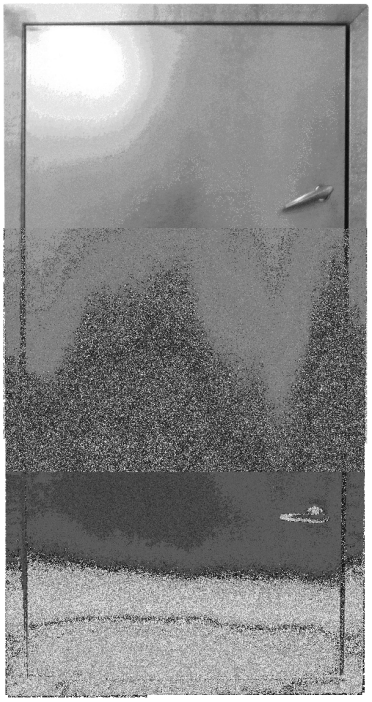

**MODEL:**
**90-WI**
**95-WI**

**Standard construction**

| | |
|---|---|
| **Frame:** | 16 Ga. galvanized steel |
| **Door panel:** | 20 Ga. galvanized steel |
| | Double wall door |

- Full length plated continuous vertical hinge
- 1/2" wide neoprene closed cell door to frame gasketing
- 2 exterior latches with interior handles
- Min. size 12"x 12" (W x H)
- Max. size 30" x 72" (W x H)

**OPTIONS**

- 316 stainless steel construction
- 12" x 12" view port
- Extra latches
- Keyed latches
- 2" in thickness

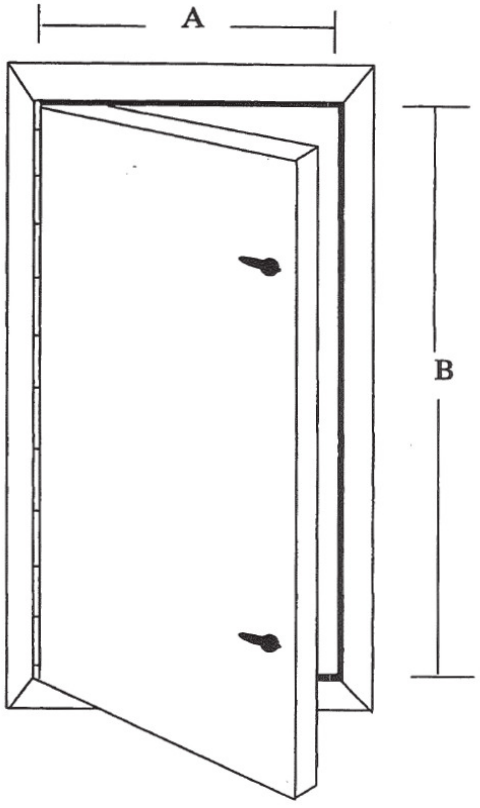


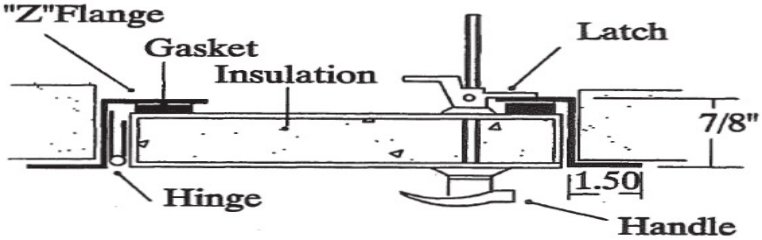


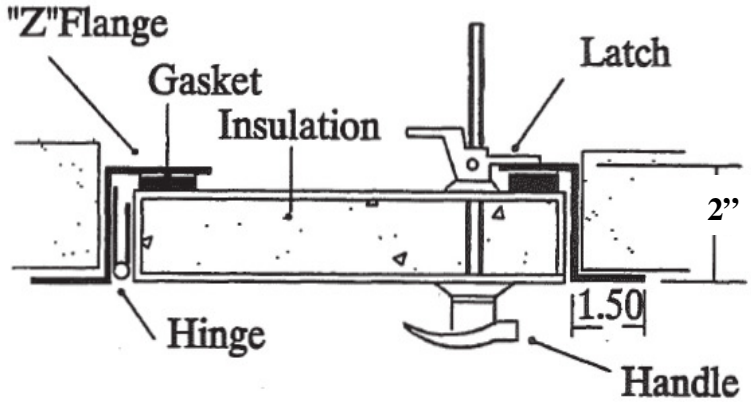


231 Commerce Dr. Montgomeryville, PA 18936
Tel: 215-412-4445 Fax: 215-412-4409
Email: lloydind@firedamper.com

138 Industrial Loop West, Orange Park, FL 32073
Tel: 904-541-1655 Fax: 904-541-1657
Email: lloydind1@firedamper.com

B1, 4/F., Luen Ming Hing Factory Building
36 Mok Cheong St.,
To Kwa Wan, Kowloon, H. K.
Tel: 852-2760-4188 Fax: 852-2760-4177
Email: tatanlexyim@lloydasia.com

Website: www.firedamper.com

*ALL STATED SPECIFICATIONS ARE SUBJECT TO UPDATE WITHOUT NOTICE OR OBLIGATION.



Lloyd Industries Inc. 2017

# EXTRUDED ALUMINUM LOUVER



## MODEL: 2-SRF

**STORM RESISTANT FLANGED FRAME LOUVER**

## APPLICATION

The 2-SRF Stationary Louver is 2" deep with a Flange Frame. it is designed for the protection of high air intake and exhaust velocities in building exterior walls. The 2-SRF is AMCA STD 500 approved.

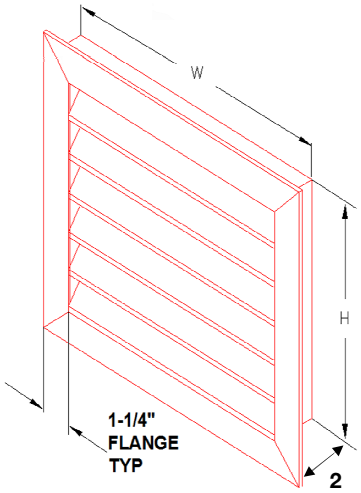


## SPECIFICATIONS

| | |
|---|---|
| **Frame:** | 0.062 thick extruded aluminum |
| | 6063-T5 mill finish |
| **Blade:** | 0.062 thick extruded aluminum |
| | 6063-T5 mill finish |
| **Blade Spacing:** | Approximately 2-1/2" center to center |
| | (except at head and sills) |
| **Fasteners:** | # 6 x 3/4" tek screws |
| **Blade Angle:** | 45º |
| **Screen:** | Bird screen |
| | 1/2"×1/2" galvanized steel |
| **Flange:** | 1-1/4" |

## OPTIONS

Insect Screen 1/16" x 1/16" Aluminum
Bird Screen 1/2" x 1/2" Aluminum
Stainless Steel Frame, Steel Frame, Copper Frame

| | |
|---|---|
| Finish: | Clear Anodized |
| | Bronze Anodized |
| | Powder Coat Paint |
| | Baked Enamel Paint |

MIAMI-DADE COUNTY APPROVED

amca CERTIFIED RATINGS
AIR PERFORMANCE
AIR MOVEMENT AND CONTROL ASSOCIATION, INC.

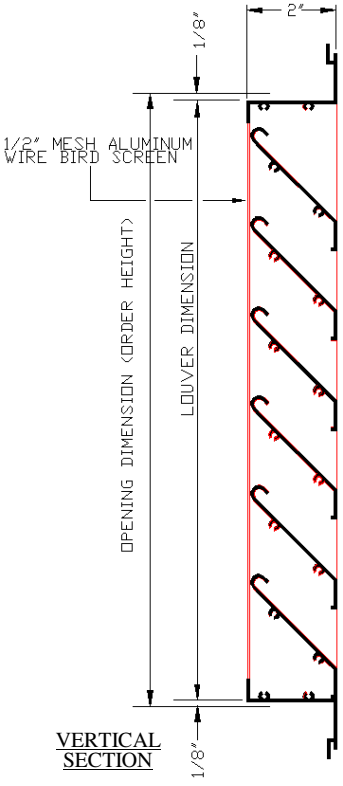


VERTICAL SECTION

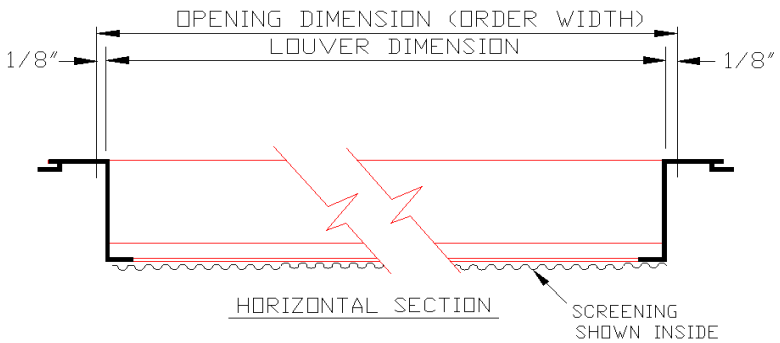


231 Commerce Dr. Montgomeryville, PA 18936
Tel: 215-412-4445 Fax: 215-412-4409
Email: lloydind@firedamper.com

138 Industrial Loop West, Orange Park, FL 32073
Tel: 904-541-1655 Fax: 904-541-1657
Email: lloydind1@firedamper.com

B1, 4/F., Luen Ming Hing Factory Building
36 Mok Cheong St.,
To Kwa Wan, Kowloon, H. K.
Tel: 852-2760-4188 Fax: 852-2760-4177
Email: tatanlexyim@lloydasia.com

Website: www.firedamper.com

*ALL STATED SPECIFICATIONS ARE SUBJECT TO UPDATE WITHOUT NOTICE OR OBLIGATION.



Lloyd Industries Inc. 2017

# EXTRUDED ALUMINUM LOUVER

Test on a 48"x48' size louver

**MODEL: 2-SRF**

## WATER PENETRATION TEST

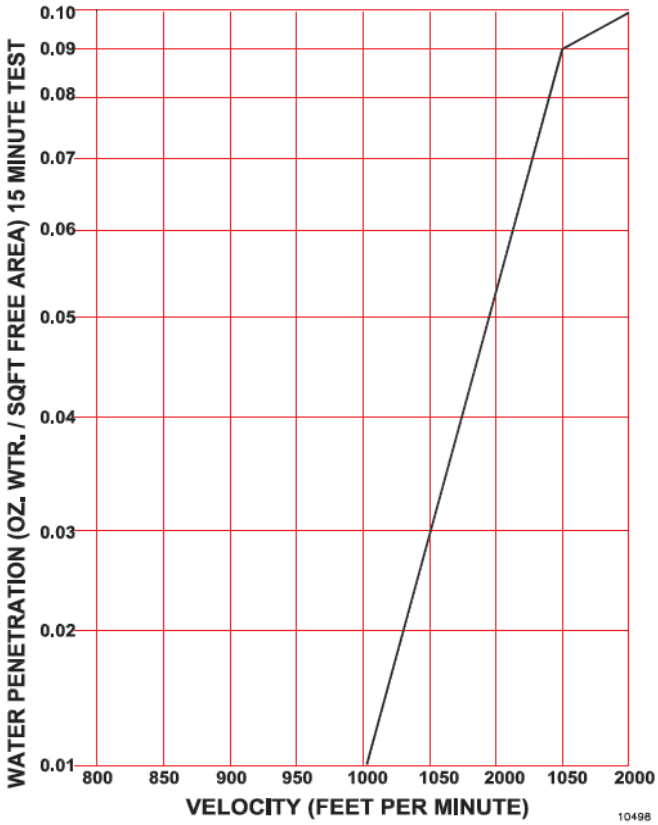


The beginning point of water penetration is 1059 FPM @ 0.01 OZ/SQ.FT. of free area.

Performance testing in accordance with AMCA STD 500

## AIR RESISTANCE TEST

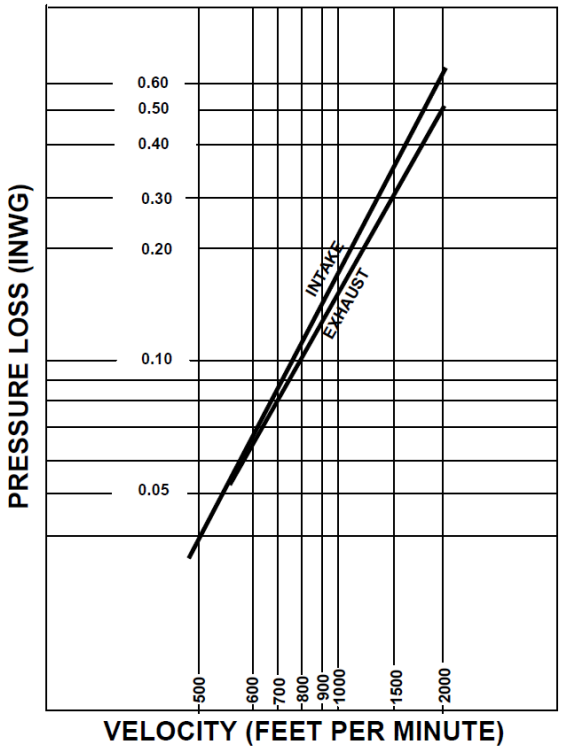


**Louver size determination**

| _____cfm / 1059 fpm = _____ ft² | | |
|---|---|---|
| air flow volume | free area velocity @ beginning point of water penetration | Required Louver Free Area |
| **Select louver size from Free Area Chart below, based on required louver free area above** | | |
| **Determine pressure drop from Pressure Drop Chart based on required louver free area above** | | |

**FREE AREA IN SQ. FT.**

| HEIGHT \ WIDTH | 12 " | 18 " | 24 " | 30 " | 36" | 42 " | 48 " | 54 " |
|---|---|---|---|---|---|---|---|---|
| 12 " | 0.29 | 0.57 | 0.77 | 0.95 | 1.10 | 1.29 | 1.45 | 1.62 |
| 24 " | 0.66 | 1.22 | 1.68 | 2.14 | 2.60 | 3.06 | 3.52 | 3.98 |
| 30 " | 0.87 | 1.58 | 2.17 | 2.75 | 3.35 | 3.94 | 4.53 | 5.12 |
| 36 " | 1.11 | 1.93 | 2.65 | 3.37 | 4.09 | 4.82 | 5.54 | 6.26 |
| 42 " | 1.30 | 2.28 | 3.13 | 3.98 | 4.84 | 5.69 | 6.55 | 7.40 |
| 48 " | 1.45 | 2.74 | 3.77 | 4.80 | 5.83 | 6.85 | 7.89 | 8.91 |
| 54 " | 1.69 | 3.09 | 4.25 | 5.41 | 6.57 | 7.73 | 8.90 | 10.05 |
| 60 " | 1.82 | 3.49 | 4.80 | 6.10 | 7.41 | 8.72 | 10.03 | 11.34 |
| 66 " | 2.08 | 3.84 | 5.28 | 6.72 | 8.16 | 9.60 | 11.04 | 12.48 |
| 72 " | 2.31 | 4.19 | 5.76 | 7.33 | 8.91 | 10.48 | 12.05 | 13.62 |
| 78 " | 2.39 | 4.54 | 6.24 | 7.95 | 9.65 | 11.35 | 13.05 | 14.76 |
| 84 " | 2.63 | 4.89 | 6.73 | 8.58 | 10.40 | 12.23 | 14.07 | 15.90 |
| 90 " | 2.70 | 5.40 | 7.43 | 9.45 | 11.48 | 13.50 | 15.53 | 17.55 |

MIAMI-DADE COUNTY APPROVED

amca CERTIFIED RATINGS AIR PERFORMANCE AIR MOVEMENT AND CONTROL ASSOCIATION, INC.

231 Commerce Dr. Montgomeryville, PA 18936
Tel: 215-412-4445 Fax: 215-412-4409
Email: lloydind@firedamper.com

138 Industrial Loop West, Orange Park, FL 32073
Tel: 904-541-1655 Fax: 904-541-1657
Email: lloydind1@firedamper.com

B1, 4/F., Luen Ming Hing Factory Building
36 Mok Cheong St.,
To Kwa Wan, Kowloon, H. K.
Tel: 852-2760-4188 Fax: 852-2760-4177
Email: tatanlexyim@lloydasia.com

Website: www.firedamper.com

*ALL STATED SPECIFICATIONS ARE SUBJECT TO UPDATE WITHOUT NOTICE OR OBLIGATION.



Lloyd Industries Inc. 2017

# LLOYD INDUSTRIES INC.

WWW.FIREDAMPER.COM

# EXTRUDED ALUMINUM LOUVER



## MODEL: 2-SRCF

**STORM RESISTANT CHANNEL FRAME LOUVER**

## APPLICATION

The 2-SRCF Stationary Louver is 2" deep with a Channel Frame. It is designed for the protection of high air intake and exhaust velocities in building exterior walls. The 2-SRCF is AMCA STD 500 approved.

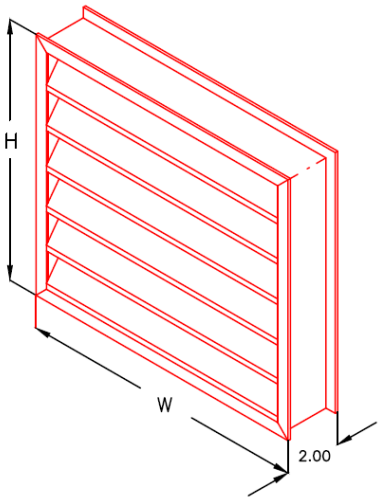


## SPECIFICATIONS

| | |
|---|---|
| **Frame:** | 0.062 thick extruded aluminum<br>6063-T5 mill finish |
| **Blade:** | 0.062 thick extruded aluminum<br>6063-T5 mill finish |
| **Blade Spacing:** | Approximately 2-1/2" center to center<br>(except at head and sills) |
| **Fasteners:** | # 6 x 3/4" tek screws |
| **Blade Angle:** | 45º |
| **Screen:** | Bird screen<br>1/2"×1/2" galvanized steel |
| **Flange:** | 1-1/4" |

## OPTIONS

Insect Screen 1/16" x 1/16" Aluminum

Bird Screen 1/2" x 1/2" Aluminum

Stainless Steel Frame, Steel Frame, Copper Frame

| | |
|---|---|
| **Finish:** | Clear Anodized<br>Bronze Anodized<br>Powder Coat Paint<br>Baked Enamel Paint |

MIAMI-DADE COUNTY APPROVED

amca CERTIFIED RATINGS AIR PERFORMANCE

AIR MOVEMENT AND CONTROL ASSOCIATION, INC.

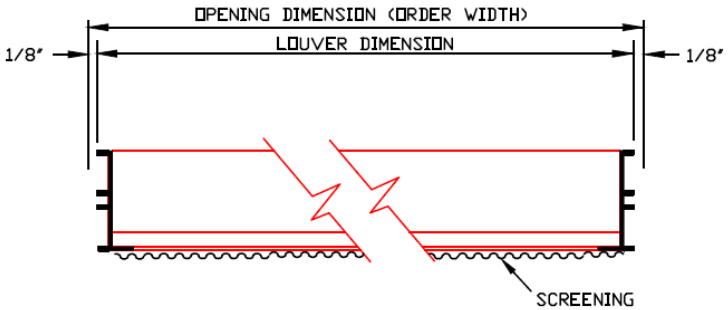


HORIZONTAL SECTION

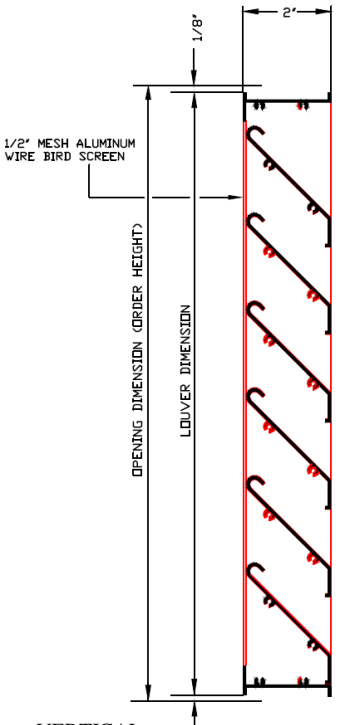


VERTICAL SECTION

231 Commerce Dr. Montgomeryville, PA 18936
Tel: 215-412-4445 Fax: 215-412-4409
Email: lloydind@firedamper.com

138 Industrial Loop West, Orange Park, FL 32073
Tel: 904-541-1655 Fax: 904-541-1657
Email: lloydind1@firedamper.com

B1, 4/F., Luen Ming Hing Factory Building
36 Mok Cheong St.,
To Kwa Wan, Kowloon, H. K.
Tel: 852-2760-4188 Fax: 852-2760-4177
Email: tatanlexyim@lloydasia.com

Website: www.firedamper.com

*ALL STATED SPECIFICATIONS ARE SUBJECT TO UPDATE WITHOUT NOTICE OR OBLIGATION.



Lloyd Industries Inc. 2017

# EXTRUDED ALUMINUM LOUVER

Test on a 48"x48' size louver

**MODEL: 2-SRCF**

## WATER PENETRATION TEST

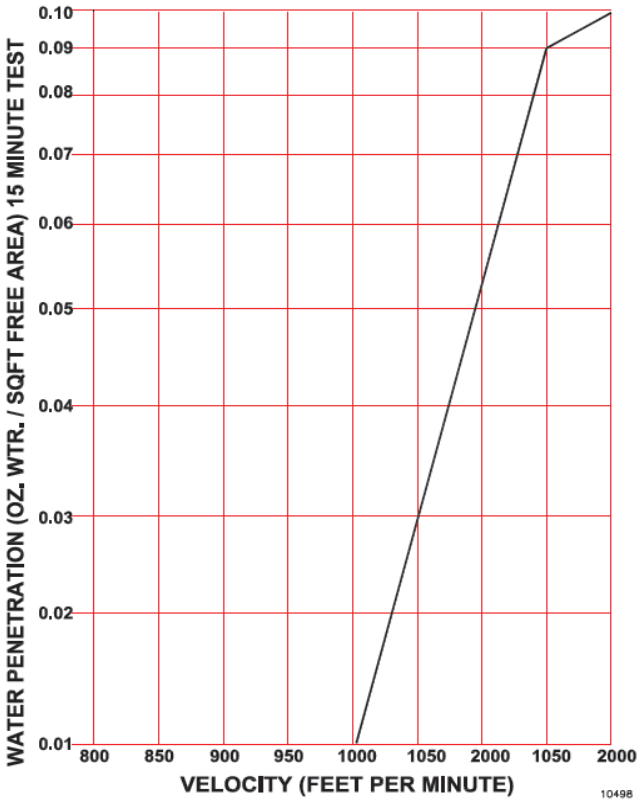


The beginning point of water penetration is 1059 FPM @ 0.01 OZ/SQ.FT. of free area.

Performance testing in accordance with AMCA STD 500

## AIR RESISTANCE TEST

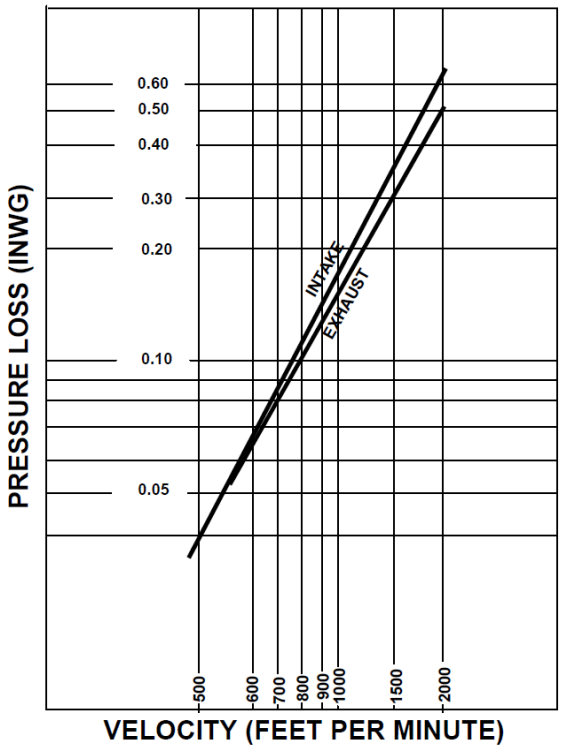


**Louver size determination**

| _____cfm / 1059 fpm = _____ ft² | | |
|---|---|---|
| air flow volume | free area velocity @ beginning point of water penetration | Required Louver Free Area |
| **Select louver size from Free Area Chart below, based on required louver free area above** | | |
| **Determine pressure drop from Pressure Drop Chart based on required louver free area above** | | |

**FREE AREA IN SQ. FT.**

| HEIGHT \ WIDTH | 12 " | 18 " | 24 " | 30 " | 36" | 42 " | 48 " | 54 " |
|---|---|---|---|---|---|---|---|---|
| 12 " | 0.29 | 0.57 | 0.77 | 0.95 | 1.10 | 1.29 | 1.45 | 1.62 |
| 24 " | 0.66 | 1.22 | 1.68 | 2.14 | 2.60 | 3.06 | 3.52 | 3.98 |
| 30 " | 0.87 | 1.58 | 2.17 | 2.75 | 3.35 | 3.94 | 4.53 | 5.12 |
| 36 " | 1.11 | 1.93 | 2.65 | 3.37 | 4.09 | 4.82 | 5.54 | 6.26 |
| 42 " | 1.30 | 2.28 | 3.13 | 3.98 | 4.84 | 5.69 | 6.55 | 7.40 |
| 48 " | 1.45 | 2.74 | 3.77 | 4.80 | 5.83 | 6.85 | 7.89 | 8.91 |
| 54 " | 1.69 | 3.09 | 4.25 | 5.41 | 6.57 | 7.73 | 8.90 | 10.05 |
| 60 " | 1.82 | 3.49 | 4.80 | 6.10 | 7.41 | 8.72 | 10.03 | 11.34 |
| 66 " | 2.08 | 3.84 | 5.28 | 6.72 | 8.16 | 9.60 | 11.04 | 12.48 |
| 72 " | 2.31 | 4.19 | 5.76 | 7.33 | 8.91 | 10.48 | 12.05 | 13.62 |
| 78 " | 2.39 | 4.54 | 6.24 | 7.95 | 9.65 | 11.35 | 13.05 | 14.76 |
| 84 " | 2.63 | 4.89 | 6.73 | 8.58 | 10.40 | 12.23 | 14.07 | 15.90 |
| 90 " | 2.70 | 5.40 | 7.43 | 9.45 | 11.48 | 13.50 | 15.53 | 17.55 |

MIAMI-DADE COUNTY APPROVED

amca CERTIFIED RATINGS AIR PERFORMANCE AIR MOVEMENT AND CONTROL ASSOCIATION, INC.

231 Commerce Dr. Montgomeryville, PA 18936
Tel: 215-412-4445 Fax: 215-412-4409
Email: lloydind@firedamper.com

138 Industrial Loop West, Orange Park, FL 32073
Tel: 904-541-1655 Fax: 904-541-1657
Email: lloydind1@firedamper.com

B1, 4/F., Luen Ming Hing Factory Building
36 Mok Cheong St.,
To Kwa Wan, Kowloon, H. K.
Tel: 852-2760-4188 Fax: 852-2760-4177
Email: tatanlexyim@lloydasia.com

Website: www.firedamper.com

*ALL STATED SPECIFICATIONS ARE SUBJECT TO UPDATE WITHOUT NOTICE OR OBLIGATION.



Lloyd Industries Inc. 2017

# LLOYD INDUSTRIES INC.

WWW.FIREDAMPER.COM

# EXTRUDED ALUMINUM LOUVER



## MODEL: 4-SRF

**IMPACT RESISTANT LOUVER**

**Miami Dade Approved-NOA No. 12-0207.04**

## APPLICATION

The 4-SRF Stationary Louver is 4" deep with a Flange Frame. That is designed for the protection of high air intake and exhaust velocities in building exterior walls. The 4-SRF is AMCA STD 500 approved.

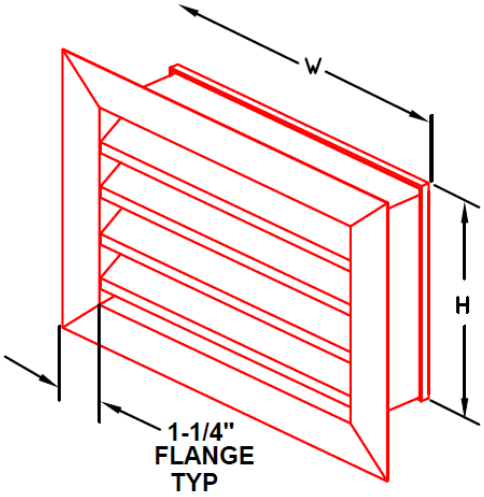


## SPECIFICATIONS

| | |
|---|---|
| **Frame:** | 0.081 thick extruded aluminum<br>6063-T5 mill finish |
| **Blade:** | 0.081 thick extruded aluminum<br>6063-T5 mill finish |
| **Blade Spacing:** | Approximately 3-1/4" center to center (except at head and sills) |
| **Fasteners:** | 10" x 3/4" tek screws |
| **Blade Angle:** | 36º |
| **Screen:** | Bird screen<br>1/2"×1/2" galvanized steel |
| **Flange:** | 1-1/4" |

## OPTIONS

Insect Screen 1/16" x 1/16" Aluminum

Bird Screen 1/2" x 1/2" Aluminum

| | |
|---|---|
| **Finish:** | Clear Anodized<br>Bronze Anodized<br>Powder Coat Paint<br>Baked Enamel Paint |

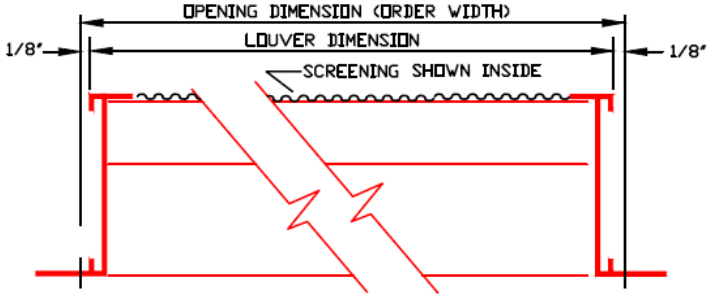


HORIZONTAL SECTION

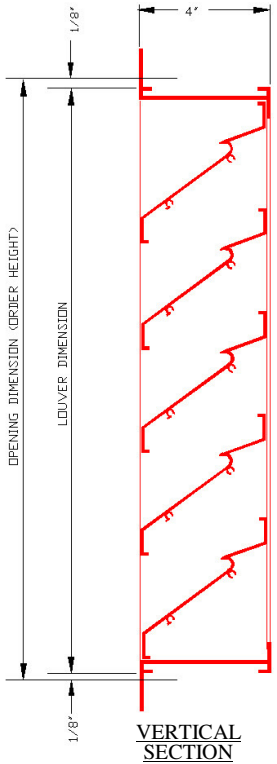


VERTICAL SECTION

231 Commerce Dr. Montgomeryville, PA 18936
Tel: 215-412-4445 Fax: 215-412-4409
Email: lloydind@firedamper.com

138 Industrial Loop West, Orange Park, FL 32073
Tel: 904-541-1655 Fax: 904-541-1657
Email: lloydind1@firedamper.com

B1, 4/F., Luen Ming Hing Factory Building
36 Mok Cheong St.,
To Kwa Wan, Kowloon, H. K.
Tel: 852-2760-4188 Fax: 852-2760-4177
Email: tatanlexyim@lloydasia.com

Website: www.firedamper.com

*ALL STATED SPECIFICATIONS ARE SUBJECT TO UPDATE WITHOUT NOTICE OR OBLIGATION.



Lloyd Industries Inc. 2017

# EXTRUDED ALUMINUM LOUVER

**MODEL: 4-SRF**

Test on a 48"x48' size louver

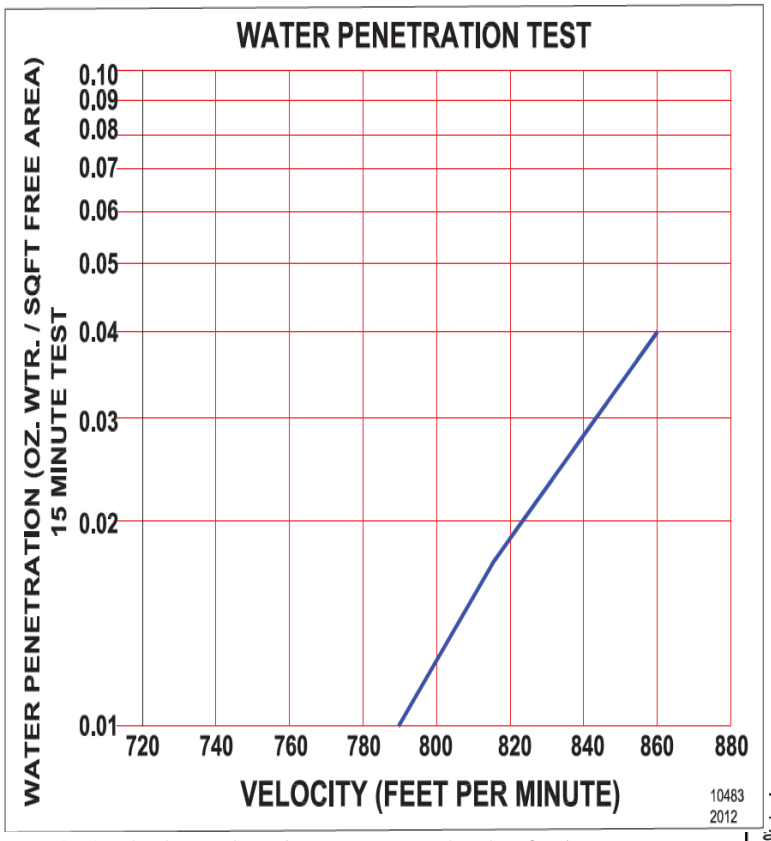


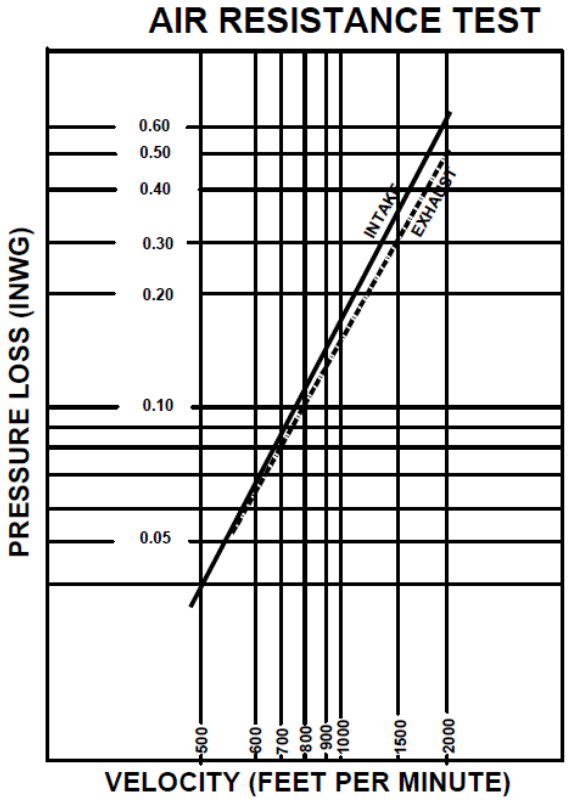


The beginning point of water penetration is **787.1** FPM @ 0.01 OZ/SQ.FT. of free area.

Performance testing in accordance with AMCA STD 500

**Louver size determination**

| _____cfm / 787.1 fpm = _____ ft² | | |
|---|---|---|
| air flow volume | free area velocity @ beginning point of water penetration | Required Louver Free Area |
| **Select louver size from Free Area Chart below, based on required louver free area above** | | |
| **Determine pressure drop from Pressure Drop Chart based on required louver free area above** | | |

FREE AREA IN SQ. FT.

| HEIGHT \ WIDTH | 12" | 18" | 24" | 30" | 36" | 42" | 48" | 54" |
|---|---|---|---|---|---|---|---|---|
| 12" | 0.24 | 0.41 | 0.57 | 0.74 | 0.90 | 1.06 | 1.23 | 1.47 |
| 24" | 0.65 | 1.09 | 1.54 | 1.93 | 2.46 | 2.91 | 3.35 | 3.75 |
| 30" | 0.81 | 1.30 | 1.84 | 2.37 | 2.93 | 3.47 | 3.99 | 4.46 |
| 36" | 0.99 | 1.75 | 2.46 | 3.18 | 3.93 | 4.64 | 5.34 | 5.98 |
| 42" | 1.22 | 2.16 | 3.05 | 3.94 | 4.86 | 5.75 | 6.62 | 7.41 |
| 48" | 1.43 | 2.60 | 3.67 | 4.74 | 5.86 | 6.93 | 7.97 | 8.93 |
| 54" | 1.60 | 2.81 | 3.97 | 5.12 | 6.33 | 7.48 | 8.61 | 9.64 |
| 60" | 1.80 | 3.26 | 4.59 | 5.93 | 7.33 | 8.66 | 9.96 | 11.16 |
| 66" | 1.90 | 3.70 | 5.22 | 6.74 | 8.32 | 9.84 | 11.32 | 12.68 |
| 72" | 2.20 | 3.91 | 5.51 | 7.12 | 8.79 | 10.40 | 11.96 | 13.39 |
| 78" | 2.43 | 4.35 | 6.13 | 7.92 | 9.79 | 11.57 | 13.31 | 14.91 |
| 84" | 2.61 | 4.77 | 6.72 | 8.68 | 10.72 | 12.68 | 14.59 | 16.34 |
| 90" | 2.87 | 5.21 | 7.35 | 9.49 | 11.72 | 13.86 | 15.94 | 17.85 |

MIAMI-DADE COUNTY APPROVED

amca CERTIFIED RATINGS AIR PERFORMANCE AIR MOVEMENT AND CONTROL ASSOCIATION, INC.

231 Commerce Dr. Montgomeryville, PA 18936
Tel: 215-412-4445 Fax: 215-412-4409
Email: lloydind@firedamper.com

138 Industrial Loop West, Orange Park, FL 32073
Tel: 904-541-1655 Fax: 904-541-1657
Email: lloydind1@firedamper.com

B1, 4/F., Luen Ming Hing Factory Building
36 Mok Cheong St.,
To Kwa Wan, Kowloon, H. K.
Tel: 852-2760-4188 Fax: 852-2760-4177
Email: tatanlexyim@lloydasia.com

Website: www.firedamper.com

*ALL STATED SPECIFICATIONS ARE SUBJECT TO UPDATE WITHOUT NOTICE OR OBLIGATION.



Lloyd Industries Inc. 2017

# LLOYD INDUSTRIES INC.

WWW.FIREDAMPER.COM

# EXTRUDED ALUMINUM LOUVER



## MODEL: 4-SRCF

**IMPACT RESISTANT CHANNEL FRAME LOUVER**

**Miami Dade County Approved-NOA No. 12-0207.04**

## APPLICATION

The 4-SRCF Stationary Louver is 4" deep with a Channel Frame, That is designed for the protection of high air intake and exhaust velocities in building exterior walls. The 4-SRCF is AMCA STD 500 approved.

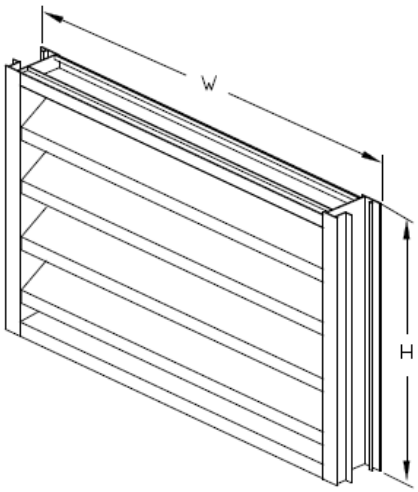


## SPECIFICATIONS

| | |
|---|---|
| **Frame:** | 0.081 thick extruded aluminum<br>6063-T5 mill finish |
| **Blade:** | 0.081 thick extruded aluminum<br>6063-T5 mill finish |
| **Blade Spacing:** | Approximately 3-1/4" center to center (except at head and sills) |
| **Fasteners:** | 10" x 3/4" tek screws |
| **Blade Angle:** | 36º |
| **Screen:** | Bird screen<br>1/2"×1/2" galvanized steel |
| **Flange:** | 1-1/4" |

## OPTIONS

Insect Screen 1/16" x 1/16" aluminum

Bird Screen 1/2" x 1/2" aluminum

Stainless Steel Frame, Steel Frame, Copper Frame

| | |
|---|---|
| **Finish:** | Clear Anodized<br>Bronze Anodized<br>Powder Coat Paint<br>Baked Enamel Paint |

MIAMI-DADE COUNTY APPROVED

amca CERTIFIED RATINGS AIR PERFORMANCE AIR MOVEMENT AND CONTROL ASSOCIATION, INC.

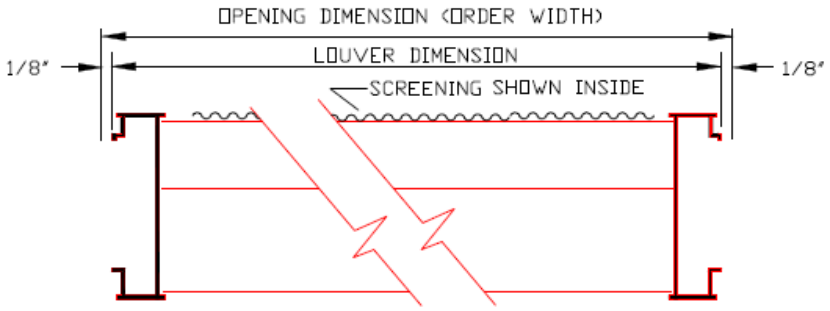


HORIZONTAL SECTION

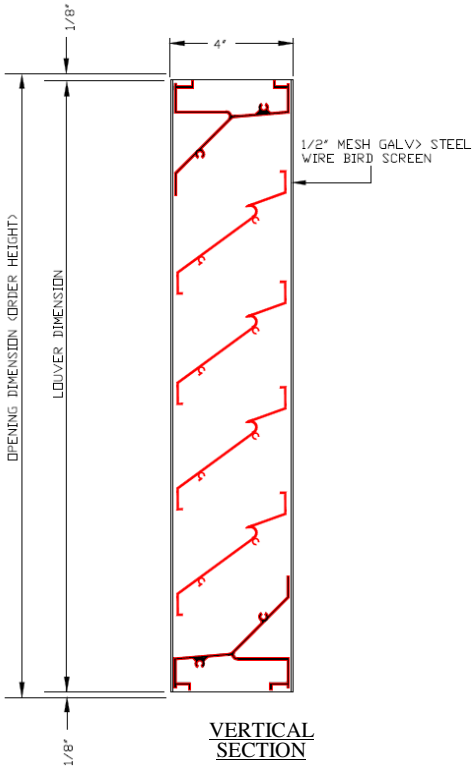


VERTICAL SECTION

231 Commerce Dr. Montgomeryville, PA 18936
Tel: 215-412-4445 Fax: 215-412-4409
Email: lloydind@firedamper.com

138 Industrial Loop West, Orange Park, FL 32073
Tel: 904-541-1655 Fax: 904-541-1657
Email: lloydind1@firedamper.com

B1, 4/F., Luen Ming Hing Factory Building
36 Mok Cheong St.,
To Kwa Wan, Kowloon, H. K.
Tel: 852-2760-4188 Fax: 852-2760-4177
Email: tatanlexyim@lloydasia.com

Website: www.firedamper.com

*ALL STATED SPECIFICATIONS ARE SUBJECT TO UPDATE WITHOUT NOTICE OR OBLIGATION.



Lloyd Industries Inc. 2017

# EXTRUDED ALUMINUM LOUVER

**MODEL: 4-SRCF**

Test on a 48"x48' size louver

**WATER PENETRATION TEST**

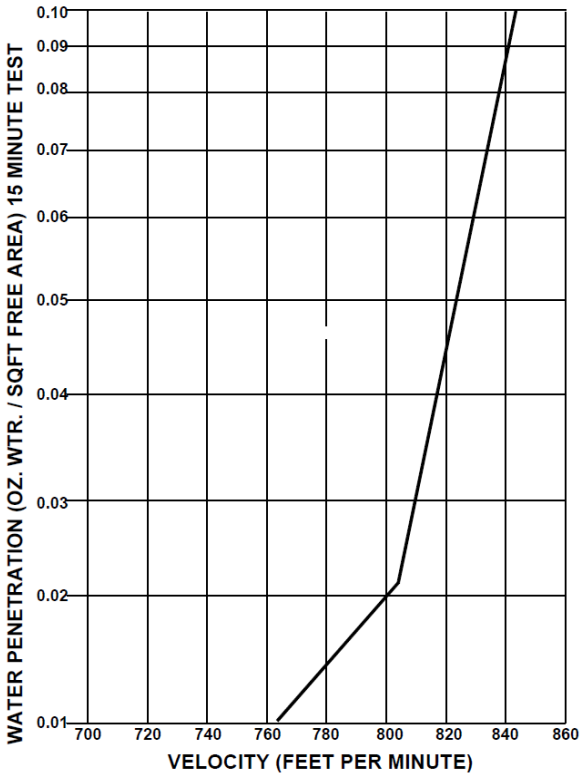


**AIR RESISTANCE TEST**

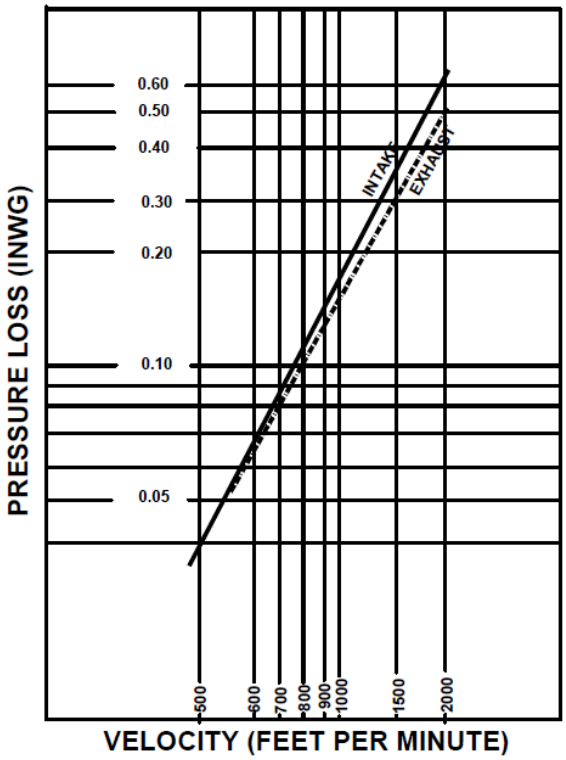


The beginning point of water penetration is 713 FPM @ 0.01 OZ/SQ.FT. of free area.

Performance testing in accordance with AMCA STD 500

**Louver size determination**

| _____cfm / 713 fpm = _____ ft² | | |
|---|---|---|
| air flow volume | free area velocity @ beginning point of water penetration | Required Louver Free Area |
| **Select louver size from Free Area Chart below, based on required louver free area above** | | |
| **Determine pressure drop from Pressure Drop Chart based on required louver free area above** | | |

FREE AREA IN SQ. FT.

| HEIGHT \ WIDTH | 12" | 18" | 24" | 30" | 36" | 42" | 48" | 54" |
|---|---|---|---|---|---|---|---|---|
| 12" | 0.24 | 0.41 | 0.57 | 0.74 | 0.90 | 1.06 | 1.23 | 1.47 |
| 24" | 0.65 | 1.09 | 1.54 | 1.93 | 2.46 | 2.91 | 3.35 | 3.75 |
| 30" | 0.81 | 1.30 | 1.84 | 2.37 | 2.93 | 3.47 | 3.99 | 4.46 |
| 36" | 0.99 | 1.75 | 2.46 | 3.18 | 3.93 | 4.64 | 5.34 | 5.98 |
| 42" | 1.22 | 2.16 | 3.05 | 3.94 | 4.86 | 5.75 | 6.62 | 7.41 |
| 48" | 1.43 | 2.60 | 3.67 | 4.74 | 5.86 | 6.93 | 7.97 | 8.93 |
| 54" | 1.60 | 2.81 | 3.97 | 5.12 | 6.33 | 7.48 | 8.61 | 9.64 |
| 60" | 1.80 | 3.26 | 4.59 | 5.93 | 7.33 | 8.66 | 9.96 | 11.16 |
| 66" | 1.90 | 3.70 | 5.22 | 6.74 | 8.32 | 9.84 | 11.32 | 12.68 |
| 72" | 2.20 | 3.91 | 5.51 | 7.12 | 8.79 | 10.40 | 11.96 | 13.39 |
| 78" | 2.43 | 4.35 | 6.13 | 7.92 | 9.79 | 11.57 | 13.31 | 14.91 |
| 84" | 2.61 | 4.77 | 6.72 | 8.68 | 10.72 | 12.68 | 14.59 | 16.34 |
| 90" | 2.87 | 5.21 | 7.35 | 9.49 | 11.72 | 13.86 | 15.94 | 17.85 |

MIAMI-DADE COUNTY APPROVED

amca CERTIFIED RATINGS AIR PERFORMANCE AIR MOVEMENT AND CONTROL ASSOCIATION, INC.

231 Commerce Dr. Montgomeryville, PA 18936
Tel: 215-412-4445 Fax: 215-412-4409
Email: lloydind@firedamper.com

138 Industrial Loop West, Orange Park, FL 32073
Tel: 904-541-1655 Fax: 904-541-1657
Email: lloydind1@firedamper.com

B1, 4/F., Luen Ming Hing Factory Building
36 Mok Cheong St.,
To Kwa Wan, Kowloon, H. K.
Tel: 852-2760-4188 Fax: 852-2760-4177
Email: tatanlexyim@lloydasia.com

Website: www.firedamper.com

*ALL STATED SPECIFICATIONS ARE SUBJECT TO UPDATE WITHOUT NOTICE OR OBLIGATION.



Lloyd Industries Inc. 2017

# LLOYD INDUSTRIES INC.

WWW.FIREDAMPER.COM

# EXTRUDED ALUMINUM LOUVER

## MODEL: 2-SRF COMBO

**COMBINATION INTAKE/EXHAUST**



## APPLICATION

The 2-SRF COMBO Stationary Louver is 2" deep with a Flanged Frame. That is designed for the protection of higher air intake and exhaust velocities in building exterior walls. The louver structure incorporates stationary 45º and 90º blades. The 2-SRF COMBO is AMCA STD 500 approved.

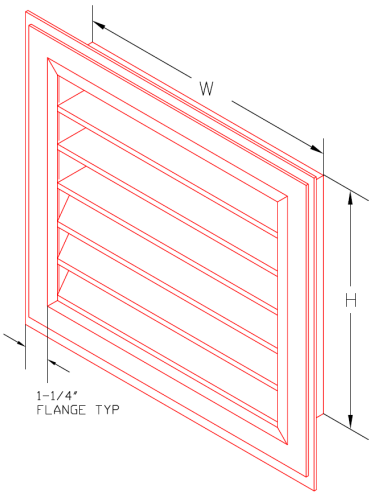


## SPECIFICATIONS

| | |
|---|---|
| **Frame:** | 0.081 thick extruded aluminum<br>6063-T5 mill finish |
| **Blade:** | 0.081 thick extruded aluminum<br>6063-T5 mill finish |
| **Blade Spacing:** | Approximately 3-1/4" center to center<br>(except at head and sills) |
| **Fasteners:** | # 6 x 3/4" tek screws |
| **Blade Angle:** | 45º and 90º |
| **Min. Height:** | 12" |
| **Max. Single Sec.:** | Consult factory for maximum size |
| **Screen:** | Bird screen 1/2"×1/2" galvanized steel |

## OPTIONS

Insect Screen 1/16" x 1/16" mesh aluminum
Bird Screen 1/2" x 1/2" aluminum

| | |
|---|---|
| **Finish:** | Clear Anodized<br>Bronze Anodized<br>Powder Coat Paint<br>Baked Enamel Paint |




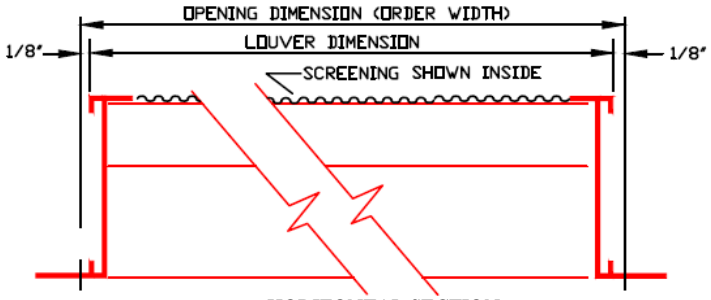


HORIZONTAL SECTION

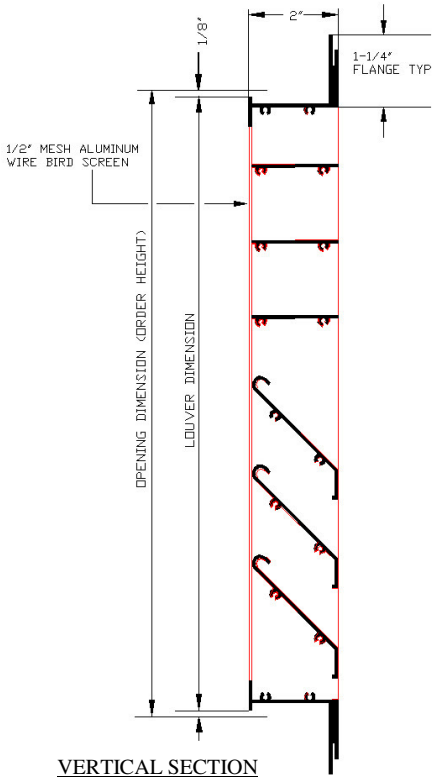


VERTICAL SECTION

231 Commerce Dr. Montgomeryville, PA 18936
Tel: 215-412-4445 Fax: 215-412-4409
Email: lloydind@firedamper.com

138 Industrial Loop West, Orange Park, FL 32073
Tel: 904-541-1655 Fax: 904-541-1657
Email: lloydind1@firedamper.com

B1, 4/F., Luen Ming Hing Factory Building
36 Mok Cheong St.,
To Kwa Wan, Kowloon, H. K.
Tel: 852-2760-4188 Fax: 852-2760-4177
Email: tatanlexyim@lloydasia.com

Website: www.firedamper.com

*ALL STATED SPECIFICATIONS ARE SUBJECT TO UPDATE WITHOUT NOTICE OR OBLIGATION.



Lloyd Industries Inc. 2017

# EXTRUDED ALUMINUM LOUVER

## MODEL: 2-SRCF COMBO

**COMBINATION INTAKE/EXHAUST**

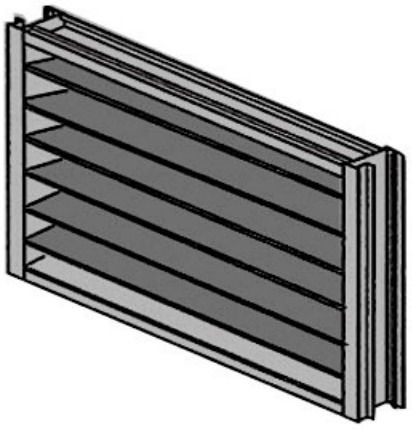

## APPLICATION

The 2-SRCF COMBO Stationary Louver is 2" deep with a Channel Frame. Which is for the protection of higher air intake and exhaust velocities in building exterior walls. The louver structure incorporates stationary 36º and 90º blades. The 2-SRCF COMBO is AMCA STD 500 approved.

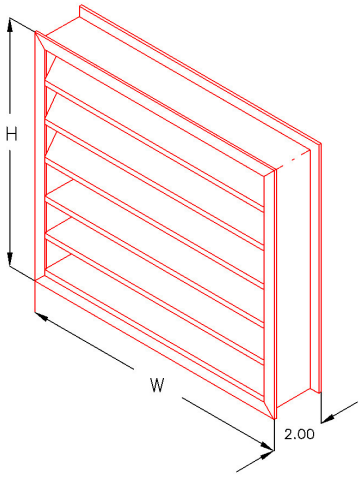


## SPECIFICATIONS

| | |
|---|---|
| **Frame:** | 0.081 thick extruded aluminum<br>6063-T5 mill finish |
| **Blade:** | 0.081 thick extruded aluminum<br>6063-T5 mill finish |
| **Blade Spacing:** | Approximately 3-1/4" center to center<br>(except at head and sills) |
| **Fasteners:** | 10" x 3/4" tek screws |
| **Blade Angle:** | 36º and 90º |
| **Min. Height:** | 12" |
| **Max. Single Sec.:** | Consult factory for maximum size |
| **Screen:** | Bird screen 1/2"×1/2" galvanized steel |

## OPTIONS

Insect Screen 1/16" x 1/16" mesh aluminum
Bird Screen 1/2" x 1/2" aluminum

| | |
|---|---|
| Finish: | Clear Anodized |
| | Bronze Anodized |
| | Powder Coat Paint |
| | Baked Enamel Paint |

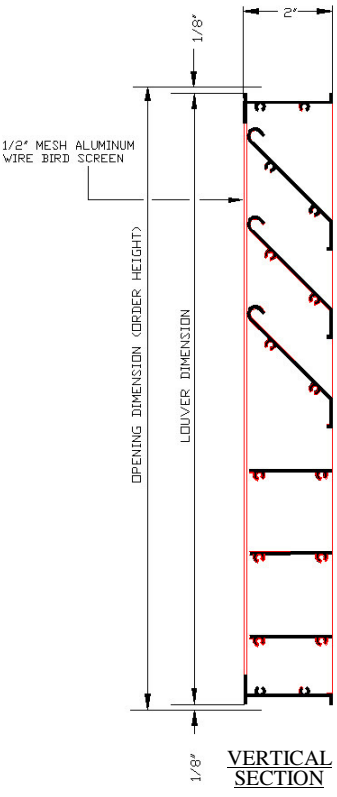


VERTICAL SECTION

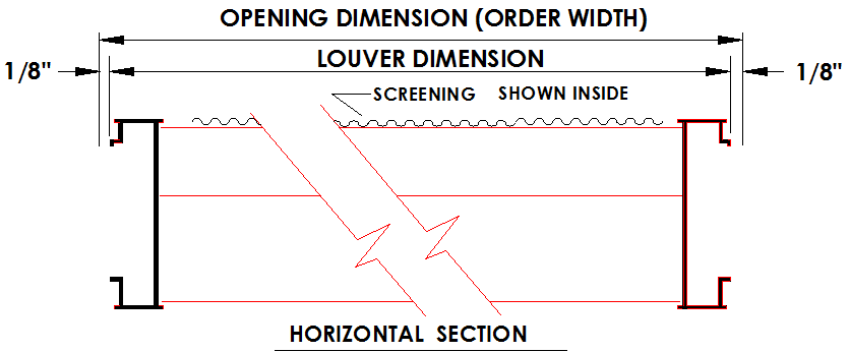


HORIZONTAL SECTION

231 Commerce Dr. Montgomeryville, PA 18936
Tel: 215-412-4445 Fax: 215-412-4409
Email: lloydind@firedamper.com

138 Industrial Loop West, Orange Park, FL 32073
Tel: 904-541-1655 Fax: 904-541-1657
Email: lloydind1@firedamper.com

B1, 4/F., Luen Ming Hing Factory Building
36 Mok Cheong St.,
To Kwa Wan, Kowloon, H. K.
Tel: 852-2760-4188 Fax: 852-2760-4177
Email: tatanlexyim@lloydasia.com

Website: www.firedamper.com

*ALL STATED SPECIFICATIONS ARE SUBJECT TO UPDATE WITHOUT NOTICE OR OBLIGATION.



Lloyd Industries Inc. 2017

# LLOYD INDUSTRIES INC.

WWW.FIREDAMPER.COM

# EXTRUDED ALUMINUM LOUVER

## MODEL: 4-SRF COMBO

**COMBINATION INTAKE/EXHAUST**
**36° AND 90° BLADE**



## APPLICATION

The 4-SRF COMBO Stationary Louver is 4" deep with a Flanged Frame. That is designed for the protection of higher air intake and exhaust velocities in building exterior walls. The louver structure incorporates stationary 36° and 90° blades. The 4-SRF COMBO is AMCA STD 500 approved

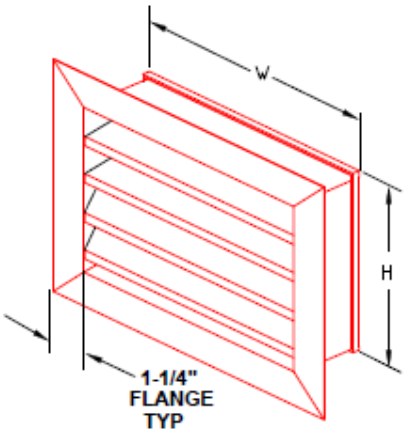


## SPECIFICATIONS

| | |
|---|---|
| **Frame:** | 0.081 thick extruded aluminum<br>6063-T5 mill finish |
| **Blade:** | 0.081 thick extruded aluminum<br>6063-T5 mill finish |
| **Blade Spacing:** | Approximately 3-1/4" centers to center<br>(except at head and sills) |
| **Fasteners:** | 10" x 3/4" tek screws |
| **Blade Angle:** | 36° and 90° |
| **Min. Height:** | 12" |
| **Max. Single Sec.:** | Consult factory for maximum size |
| **Screen:** | Bird screen 1/2"×1/2" galvanized steel |

## OPTIONS

Insect Screen 1/16" x 1/16" mesh aluminum
Bird Screen 1/2" x 1/2" aluminum

| | |
|---|---|
| Finish: | Clear Anodized |
| | Bronze Anodized |
| | Powder Coat Paint |
| | Baked Enamel Paint |

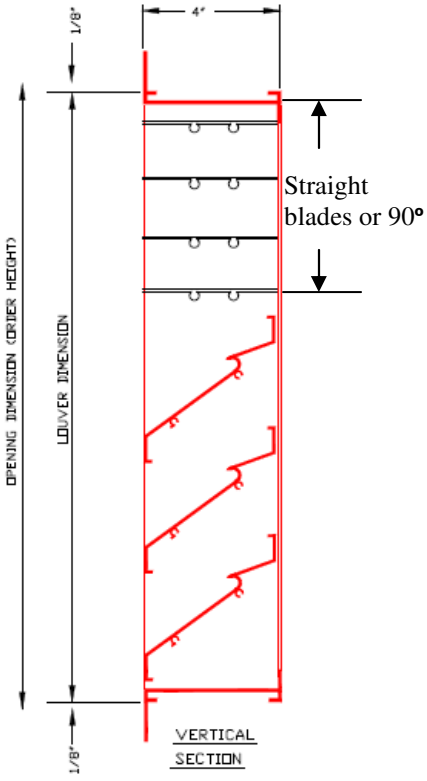


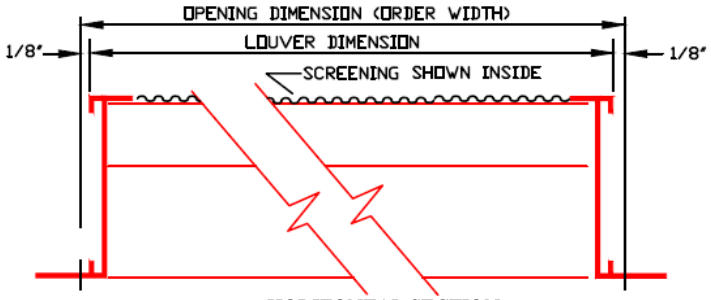


HORIZONTAL SECTION

231 Commerce Dr. Montgomeryville, PA 18936
Tel: 215-412-4445 Fax: 215-412-4409
Email: lloydind@firedamper.com

138 Industrial Loop West, Orange Park, FL 32073
Tel: 904-541-1655 Fax: 904-541-1657
Email: lloydind1@firedamper.com

B1, 4/F., Luen Ming Hing Factory Building
36 Mok Cheong St.,
To Kwa Wan, Kowloon, H. K.
Tel: 852-2760-4188 Fax: 852-2760-4177
Email: tatanlexyim@lloydasia.com

Website: www.firedamper.com

*ALL STATED SPECIFICATIONS ARE SUBJECT TO UPDATE WITHOUT NOTICE OR OBLIGATION.



Lloyd Industries Inc. 2017

# LLOYD INDUSTRIES INC.

WWW.FIREDAMPER.COM

# EXTRUDED ALUMINUM LOUVER

## MODEL: 4-SRCF COMBO

**COMBINATION INTAKE/EXHAUST**

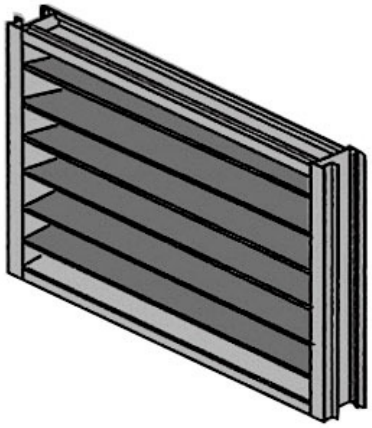

## APPLICATION

The 4-SRCF COMBO Stationary Louver is 4" deep with a Channel Frame. That is designed for the protection of higher air intake and exhaust velocities in building exterior walls. The louver structure incorporates stationary 36º and 90º blades. The 4-SRCF COMBO is AMCA STD 500 approved

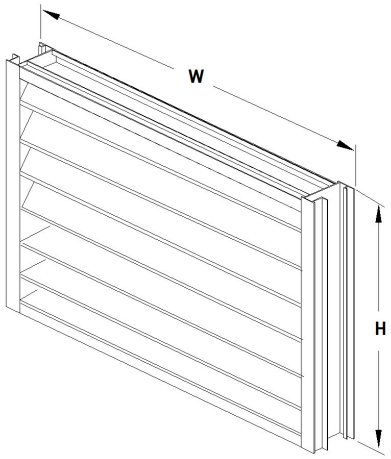


## SPECIFICATIONS

| | |
|---|---|
| **Frame:** | 0.081 thick extruded aluminum 6063-T5 mill finish |
| **Blade:** | 0.081 thick extruded aluminum 6063-T5 mill finish |
| **Blade Spacing:** | Approximately 3-1/4" center to center (except at head and sills) |
| **Fasteners:** | 10" x 3/4" tek screws |
| **Blade Angle:** | 36º and 90º |
| **Min. Height:** | 12" |
| **Max. Single Sec.:** | Consult factory for maximum size |
| **Screen:** | Bird screen 1/2"×1/2" galvanized steel |

## OPTIONS

Insect Screen 1/16" x 1/16" mesh aluminum

Bird Screen 1/2" x 1/2" aluminum

| | |
|---|---|
| Finish: | Clear Anodized |
| | Bronze Anodized |
| | Powder Coat Paint |
| | Baked Enamel Paint |

amca CERTIFIED RATINGS — AIR PERFORMANCE — AIR MOVEMENT AND CONTROL ASSOCIATION, INC.

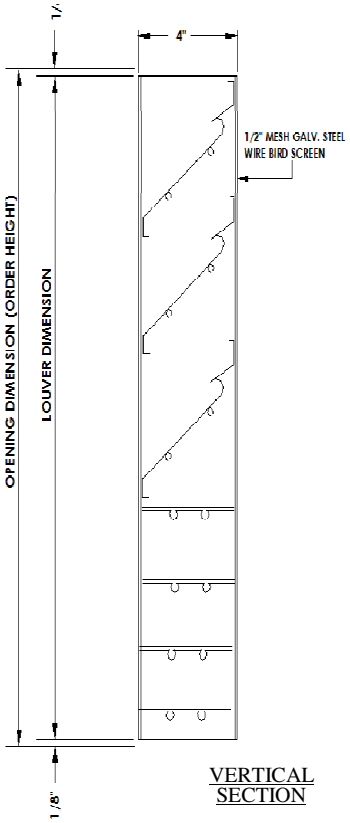


VERTICAL SECTION

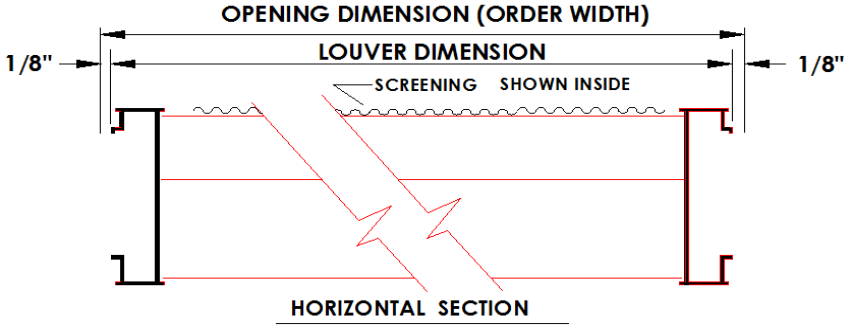


HORIZONTAL SECTION

231 Commerce Dr. Montgomeryville, PA 18936
Tel: 215-412-4445 Fax: 215-412-4409
Email: lloydind@firedamper.com

138 Industrial Loop West, Orange Park, FL 32073
Tel: 904-541-1655 Fax: 904-541-1657
Email: lloydind1@firedamper.com

B1, 4/F., Luen Ming Hing Factory Building
36 Mok Cheong St.,
To Kwa Wan, Kowloon, H. K.
Tel: 852-2760-4188 Fax: 852-2760-4177
Email: tatanlexyim@lloydasia.com

Website: www.firedamper.com

*ALL STATED SPECIFICATIONS ARE SUBJECT TO UPDATE WITHOUT NOTICE OR OBLIGATION.



Lloyd Industries Inc. 2017

# EXTRUDED ALUMINUM LOUVER

## MODEL: 4-DL

**4" DEPTH DRAINABLE LOUVER**
**Channel Frame**



## APPLICATION

The 4-DL is a 4" deep drainable louver for protection of high air intake and exhaust velocities in building exterior walls. The structure of the 4-DL incorporates horizontal blades to channel water to the jambs which directs the water to escape at the sill.

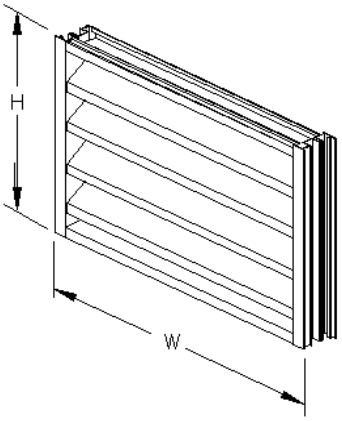


## SPECIFICATIONS

| | |
|---|---|
| **Frame:** | 0.081 thick extruded aluminum<br>6063-T5 mill finish |
| **Blade:** | 0.081 thick extruded aluminum<br>6063-T5 mill finish |
| **Blade Spacing:** | Approximately 3-1/4" center to center<br>(except at head and sills) |
| **Fasteners:** | 10" x 3/4" tek screws |
| **Blade Angle:** | 45º |
| **Min. Height:** | 8" |
| **Max. Single Sec.:** | Consult factory for maximum size |
| **Screen:** | Bird screen 1/2"×1/2" galvanized steel |

## OPTIONS

Insect Screen 1/16" x 1/16" mesh Aluminum
Bird Screen 1/2" x 1/2" Aluminum

| | |
|---|---|
| Finish: | Clear Anodized |
| | Bronze Anodized |
| | Powder Coat Paint |
| | Baked Enamel Paint |

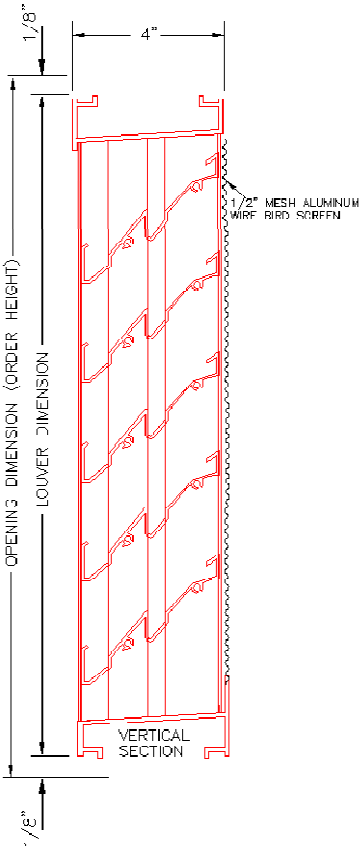


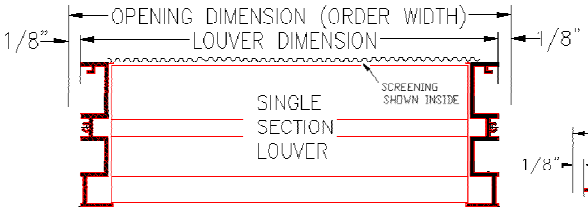


HORIZONTAL SECTION

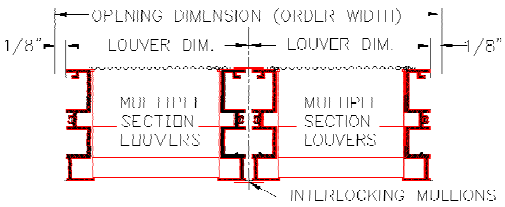


231 Commerce Dr. Montgomeryville, PA 18936
Tel: 215-412-4445 Fax: 215-412-4409
Email: lloydind@firedamper.com

138 Industrial Loop West, Orange Park, FL 32073
Tel: 904-541-1655 Fax: 904-541-1657
Email: lloydind1@firedamper.com

B1, 4/F., Luen Ming Hing Factory Building
36 Mok Cheong St.,
To Kwa Wan, Kowloon, H. K.
Tel: 852-2760-4188 Fax: 852-2760-4177
Email: tatanlexyim@lloydasia.com

Website: www.firedamper.com

*ALL STATED SPECIFICATIONS ARE SUBJECT TO UPDATE WITHOUT NOTICE OR OBLIGATION.



Lloyd Industries Inc. 2017

# EXTRUDED ALUMINUM LOUVER

## MODEL: 4-DLF

**4" DEPTH DRAINABLE FLANGED FRAME LOUVER**



## APPLICATION

The 4-DLF is a 4" deep drainable flanged frame louver for protection of high air intake and exhaust velocities in building exterior walls. The blade design for the 4-DLF performs better to channel water to the jambs which then directs the water to escape at the sill

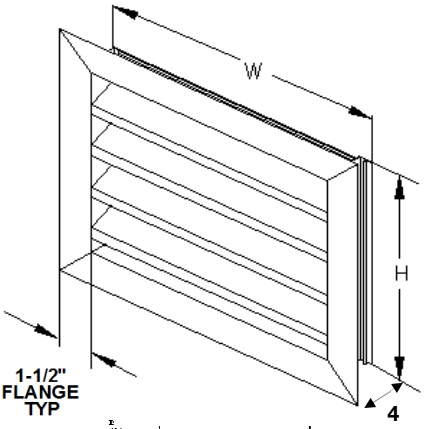


## SPECIFICATIONS

| | |
|---|---|
| **Frame:** | 0.081 thick extruded aluminum<br>6063-T5 mill finish |
| **Blade:** | 0.081 thick extruded aluminum<br>6063-T5 mill finish |
| **Blade Spacing:** | Approximately 3-1/4" center to center<br>(except at head and sills) |
| **Fasteners:** | 10" x 3/4" tek screws |
| **Blade Angle:** | 45º |
| **Min. Height:** | 8" |
| **Max. Single Sec.:** | Consult factory for maximum size |
| **Screen:** | Bird screen 1/2"×1/2" galvanized steel |

## OPTIONS

Insect Screen 1/16" x 1/16" mesh aluminum
Bird Screen 1/2" x 1/2" aluminum

| | |
|---|---|
| Finish: | Clear Anodized |
| | Bronze Anodized |
| | Powder Coat Paint |
| | Baked Enamel Paint |

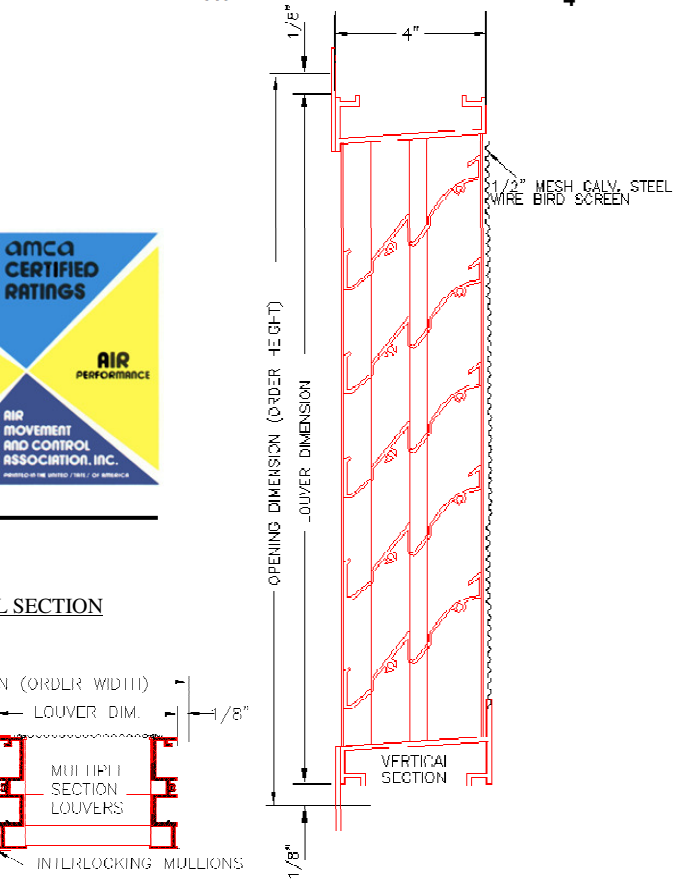


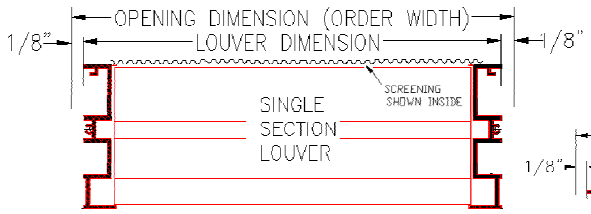


HORIZONTAL SECTION

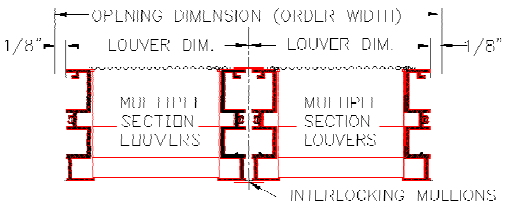


231 Commerce Dr. Montgomeryville, PA 18936
Tel: 215-412-4445 Fax: 215-412-4409
Email: lloydind@firedamper.com

138 Industrial Loop West, Orange Park, FL 32073
Tel: 904-541-1655 Fax: 904-541-1657
Email: lloydind1@firedamper.com

B1, 4/F., Luen Ming Hing Factory Building
36 Mok Cheong St.,
To Kwa Wan, Kowloon, H. K.
Tel: 852-2760-4188 Fax: 852-2760-4177
Email: tatanlexyim@lloydasia.com

Website: www.firedamper.com

*ALL STATED SPECIFICATIONS ARE SUBJECT TO UPDATE WITHOUT NOTICE OR OBLIGATION.



Lloyd Industries Inc. 2017

# LLOYD INDUSTRIES INC.

WWW.FIREDAMPER.COM

## EXTRUDED ALUMINUM LOUVER

**MODEL: 4-DL & 4-DLF**

Test on a 48”x48’ size louver

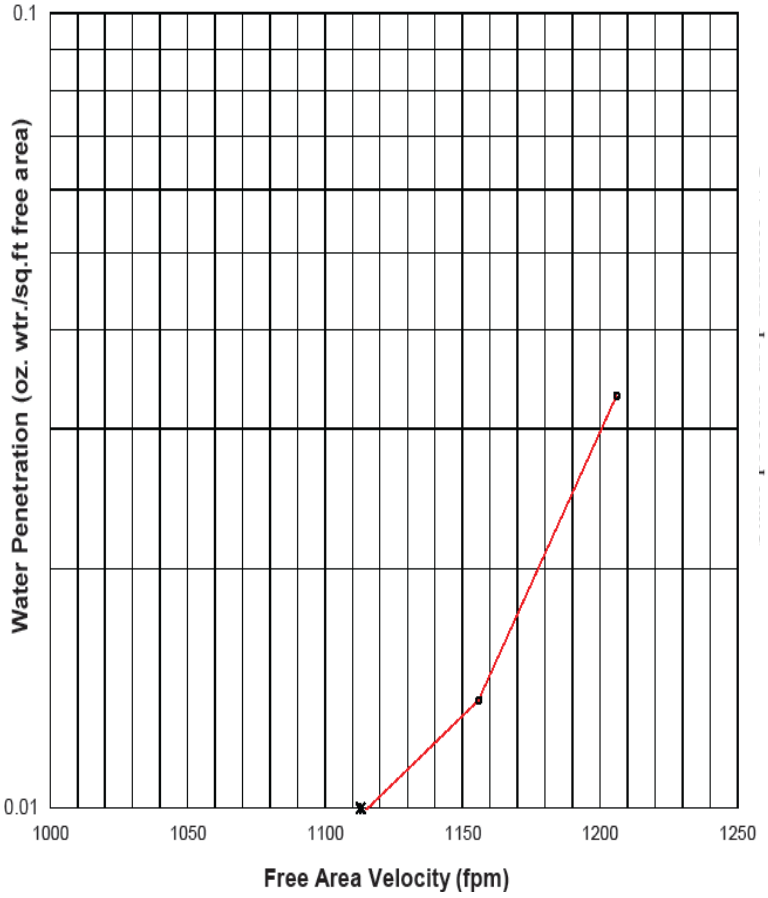


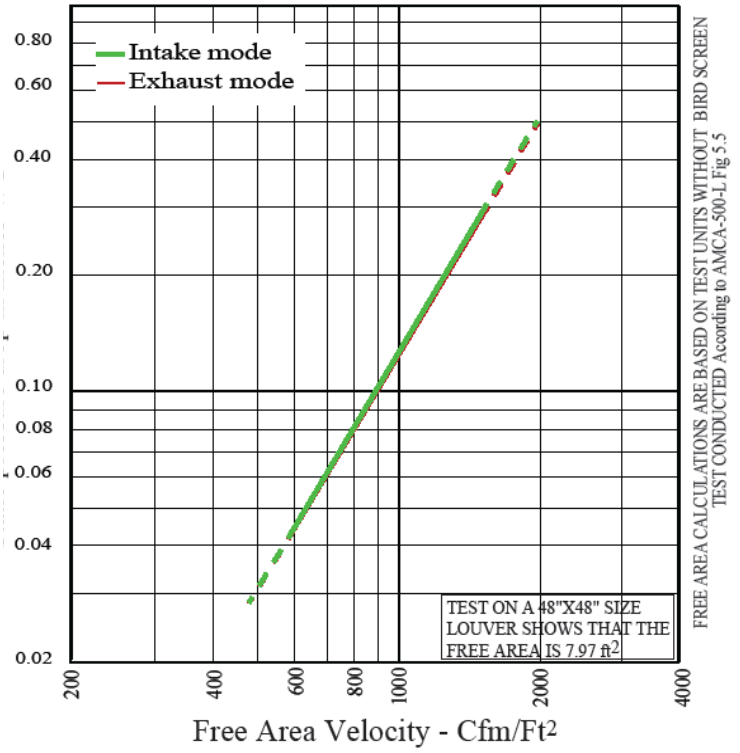


**Louver size determination**

| _____cfm / __1113_____fpm = _____ft² | | |
|---|---|---|
| air flow volume | free area velocity @ beginning point of water penetration | Required Louver Free Area |
| **Select louver size from Free Area Chart below, based on required louver free area above** | | |
| **Determine pressure drop from Pressure Drop Chart based on required louver free area above** | | |

The beginning point of water penetration is **1113** FPM @ 0.01 OZ/SQ.FT. of free area.

Performance testing in accordance with AMCA STD 500

**FREE AREA IN SQ.FT.**

LOUVER WIDTH

| LOUVER HEIGHT | 12 | 18 | 24 | 30 | 36 | 42 | 48 | 54 | 60 | 66 | 72 | 78 | 84 | 90 | 96 | 102 | 108 | 114 | 120 |
|---|---|---|---|---|---|---|---|---|---|---|---|---|---|---|---|---|---|---|---|
| 12 | 0.38 | 0.62 | 0.86 | 1.10 | 1.34 | 1.59 | 1.83 | 2.07 | 2.31 | 2.56 | 2.80 | 3.04 | 3.28 | 3.52 | 3.77 | 4.01 | 4.25 | 4.49 | 4.74 |
| 18 | 0.50 | 0.82 | 1.15 | 1.47 | 1.79 | 2.12 | 2.44 | 2.76 | 3.08 | 3.41 | 3.73 | 4.05 | 4.38 | 4.70 | 5.02 | 5.35 | 5.67 | 5.99 | 6.31 |
| 24 | 0.76 | 1.25 | 1.74 | 2.23 | 2.72 | 3.21 | 3.70 | 4.19 | 4.68 | 5.17 | 5.66 | 6.15 | 6.64 | 7.13 | 7.61 | 8.10 | 8.59 | 9.08 | 9.57 |
| 30 | 1.01 | 1.66 | 2.31 | 2.96 | 3.61 | 4.27 | 4.92 | 5.57 | 6.22 | 6.87 | 7.52 | 8.17 | 8.82 | 9.48 | 10.13 | 10.78 | 11.43 | 12.08 | 12.73 |
| 36 | 1.13 | 1.87 | 2.60 | 3.33 | 4.06 | 4.79 | 5.53 | 6.26 | 6.99 | 7.72 | 8.45 | 9.19 | 9.92 | 10.65 | 11.38 | 12.11 | 12.85 | 13.58 | 14.31 |
| 42 | 1.38 | 2.28 | 3.17 | 4.07 | 4.96 | 5.85 | 6.75 | 7.64 | 8.53 | 9.43 | 10.32 | 11.21 | 12.11 | 13.00 | 13.89 | 14.79 | 15.68 | 16.57 | 17.47 |
| 48 | 1.64 | 2.69 | 3.75 | 4.80 | 5.86 | 6.91 | 7.97 | 9.02 | 10.07 | 11.13 | 12.18 | 13.24 | 14.29 | 15.35 | 16.40 | 17.46 | 18.51 | 19.57 | 20.62 |
| 54 | 1.89 | 3.10 | 4.32 | 5.53 | 6.75 | 7.97 | 9.19 | 10.40 | 11.62 | 12.83 | 14.05 | 15.27 | 16.48 | 17.70 | 18.92 | 20.13 | 21.35 | 22.57 | 23.78 |
| 60 | 2.01 | 3.31 | 4.61 | 5.90 | 7.20 | 8.50 | 9.80 | 11.09 | 12.39 | 13.69 | 14.98 | 16.28 | 17.58 | 18.87 | 20.17 | 21.47 | 22.77 | 24.06 | 25.36 |
| 66 | 2.26 | 3.72 | 5.18 | 6.64 | 8.10 | 9.55 | 11.02 | 12.47 | 13.93 | 15.39 | 16.85 | 18.31 | 19.77 | 21.22 | 22.68 | 24.14 | 25.60 | 27.06 | 28.52 |
| 72 | 2.51 | 4.13 | 5.75 | 7.37 | 8.99 | 10.61 | 12.24 | 13.85 | 15.47 | 17.09 | 18.71 | 20.33 | 21.95 | 23.57 | 25.19 | 26.81 | 28.43 | 30.05 | 31.68 |
| 78 | 2.76 | 4.54 | 6.33 | 8.11 | 9.89 | 11.67 | 13.45 | 15.23 | 17.02 | 18.80 | 20.58 | 22.36 | 24.14 | 25.92 | 27.71 | 29.49 | 31.27 | 33.05 | 34.83 |
| 84 | 2.89 | 4.75 | 6.61 | 8.47 | 10.34 | 12.20 | 14.06 | 15.92 | 17.79 | 19.65 | 21.51 | 23.37 | 25.24 | 27.10 | 28.96 | 30.82 | 32.69 | 34.55 | 36.41 |
| 90 | 3.14 | 5.16 | 7.19 | 9.21 | 11.23 | 13.26 | 15.28 | 17.30 | 19.33 | 21.35 | 23.38 | 25.40 | 27.42 | 29.45 | 31.47 | 33.50 | 35.52 | 37.54 | 39.57 |
| 96 | 3.39 | 5.57 | 7.76 | 9.94 | 12.13 | 14.31 | 16.50 | 18.69 | 20.87 | 23.06 | 25.24 | 27.43 | 29.61 | 31.80 | 33.98 | 36.17 | 38.35 | 40.54 | 42.73 |
| 102 | 3.64 | 5.98 | 8.33 | 10.68 | 13.03 | 15.37 | 17.72 | 20.07 | 22.41 | 24.76 | 27.11 | 29.45 | 31.80 | 34.15 | 36.50 | 38.84 | 41.19 | 43.54 | 45.88 |
| 108 | 3.76 | 6.19 | 8.62 | 11.05 | 13.47 | 15.90 | 18.33 | 20.76 | 23.18 | 25.61 | 28.04 | 30.47 | 32.90 | 35.32 | 37.75 | 40.18 | 42.61 | 45.03 | 47.46 |
| 114 | 4.01 | 6.60 | 9.19 | 11.78 | 14.37 | 16.96 | 19.55 | 22.14 | 24.73 | 27.32 | 29.91 | 32.49 | 35.08 | 37.67 | 40.26 | 42.85 | 45.44 | 48.03 | 50.62 |
| 120 | 4.26 | 7.01 | 9.77 | 12.52 | 15.27 | 18.02 | 20.77 | 23.52 | 26.27 | 29.02 | 31.77 | 34.52 | 37.27 | 40.02 | 42.77 | 45.52 | 48.27 | 51.03 | 53.78 |

amca CERTIFIED RATINGS — AIR PERFORMANCE — AIR MOVEMENT AND CONTROL ASSOCIATION, INC.


231 Commerce Dr. Montgomeryville, PA 18936
Tel: 215-412-4445 Fax: 215-412-4409
Email: lloydind@firedamper.com

138 Industrial Loop West, Orange Park, FL 32073
Tel: 904-541-1655 Fax: 904-541-1657
Email: lloydind1@firedamper.com

B1, 4/F., Luen Ming Hing Factory Building
36 Mok Cheong St.,
To Kwa Wan, Kowloon, H. K.
Tel: 852-2760-4188 Fax: 852-2760-4177
Email: tatanlexyim@lloydasia.com

Website: www.firedamper.com



*ALL STATED SPECIFICATIONS ARE SUBJECT TO UPDATE WITHOUT NOTICE OR OBLIGATION.





Lloyd Industries Inc. 2017

# EXTRUDED ALUMINUM LOUVER

## MODEL: 4-DL 33°

**4" DEPTH DRAINABLE LOUVER**



## APPLICATION

The 4-DL 33° is a 4" deep drainable louver designed for protection of higher air intake and exhaust velocities openings in building exterior walls. The blade design for the 4-DL 33° performs better to channel water to the jambs which then directs the water to escape at the sill

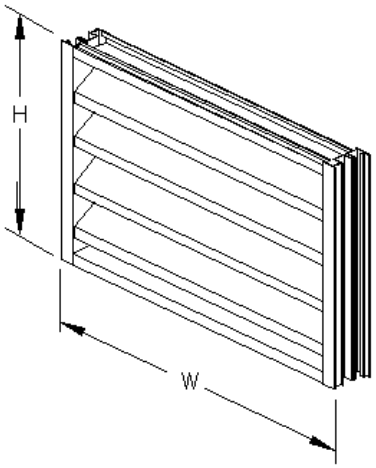


## SPECIFICATIONS

| | |
|---|---|
| **Frame:** | 0.081 thick extruded aluminum<br>6063-T5 mill finish |
| **Blade:** | 0.081 thick extruded aluminum<br>6063-T5 mill finish |
| **Blade Spacing:** | Approximately 3-1/4" center to center<br>(except at head and sills) |
| **Fasteners:** | 10" x 3/4" tek screws |
| **Blade Angle:** | 33° |
| **Min. Height:** | 8" |
| **Max. Single Sec.:** | Consult factory for maximum size |
| **Screen:** | Bird screen 1/2"×1/2" galvanized steel |

## OPTIONS

Insect Screen 1/16" x 1/16" mesh aluminum
Bird Screen 1/2" x 1/2" aluminum

| | |
|---|---|
| Finish: | Clear Anodized |
| | Bronze Anodized |
| | Powder Coat Paint |
| | Baked Enamel Paint |

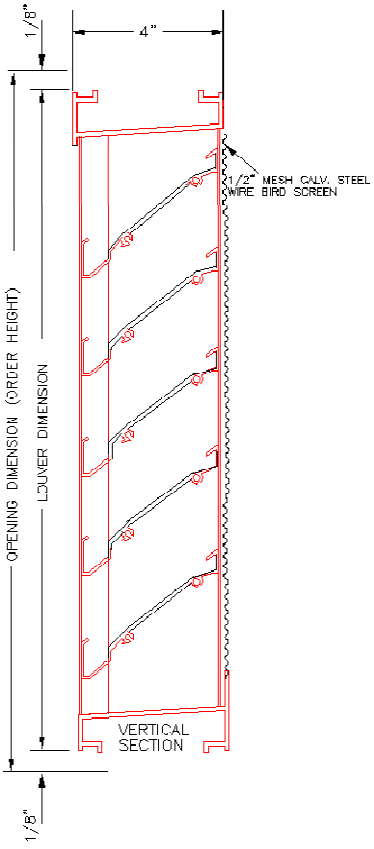


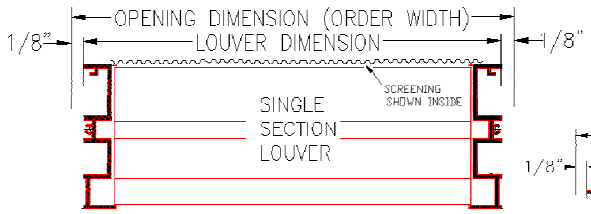


HORIZONTAL SECTION

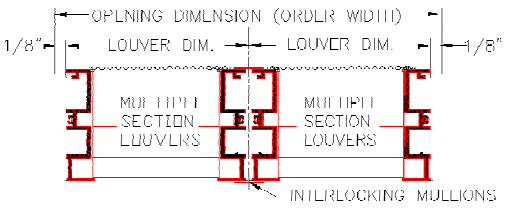


231 Commerce Dr. Montgomeryville, PA 18936
Tel: 215-412-4445 Fax: 215-412-4409
Email: lloydind@firedamper.com

138 Industrial Loop West, Orange Park, FL 32073
Tel: 904-541-1655 Fax: 904-541-1657
Email: lloydind1@firedamper.com

B1, 4/F., Luen Ming Hing Factory Building
36 Mok Cheong St.,
To Kwa Wan, Kowloon, H. K.
Tel: 852-2760-4188 Fax: 852-2760-4177
Email: tatanlexyim@lloydasia.com

Website: www.firedamper.com

*ALL STATED SPECIFICATIONS ARE SUBJECT TO UPDATE WITHOUT NOTICE OR OBLIGATION.



Lloyd Industries Inc. 2017

# EXTRUDED ALUMINUM LOUVER



## MODEL: 4-DLF 33°

**4" DEPTH DRAINABLE FLANGED FRAME LOUVER**

## APPLICATION

The 4-DLF 33° is a 4" deep drainable flanged frame louver designed for protection of higher air intake and exhaust velocities openings in building exterior walls. The blade design for the 4-DLF 33° performs better to channel water to the jambs which then directs the water to escape at the sill

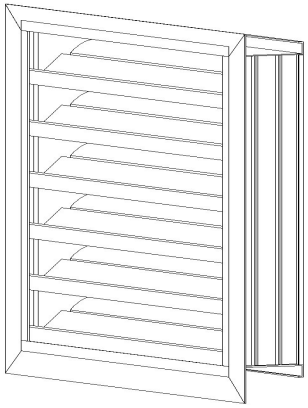

## SPECIFICATIONS

| | |
|---|---|
| **Frame:** | 0.081 thick extruded aluminum<br>6063-T5 mill finish |
| **Blade:** | 0.081 thick extruded aluminum<br>6063-T5 mill finish |
| **Blade Spacing:** | Approximately 3-1/4" center to center<br>(except at head and sills) |
| **Fasteners:** | 10" x 3/4" tek screws |
| **Blade Angle:** | 33° |
| **Min. Height:** | 8" |
| **Max. Single Sec.:** | Consult factory for maximum size |
| **Screen:** | Bird screen 1/2"×1/2" galvanized steel |

## OPTIONS

Insect Screen 1/16" x 1/16" mesh aluminum
Bird Screen 1/2" x 1/2" aluminum

| | |
|---|---|
| Finish: | Clear Anodized |
| | Bronze Anodized |
| | Powder Coat Paint |
| | Baked Enamel Paint |

amca CERTIFIED RATINGS
AIR PERFORMANCE
AIR MOVEMENT AND CONTROL ASSOCIATION, INC.

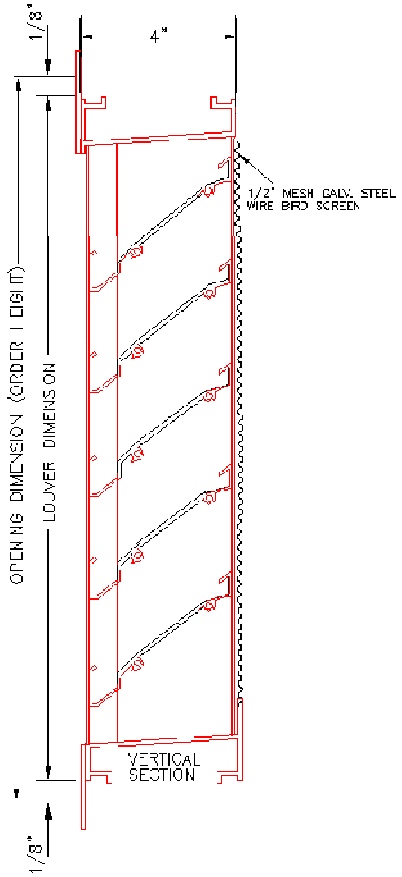


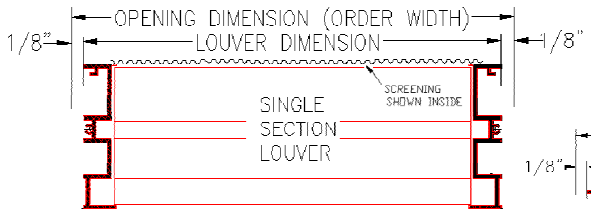


HORIZONTAL SECTION

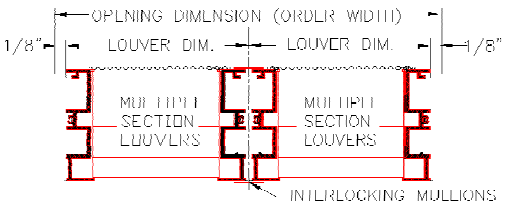


231 Commerce Dr. Montgomeryville, PA 18936
Tel: 215-412-4445 Fax: 215-412-4409
Email: lloydind@firedamper.com

138 Industrial Loop West, Orange Park, FL 32073
Tel: 904-541-1655 Fax: 904-541-1657
Email: lloydind1@firedamper.com

B1, 4/F., Luen Ming Hing Factory Building
36 Mok Cheong St.,
To Kwa Wan, Kowloon, H. K.
Tel: 852-2760-4188 Fax: 852-2760-4177
Email: tatanlexyim@lloydasia.com

Website: www.firedamper.com

*ALL STATED SPECIFICATIONS ARE SUBJECT TO UPDATE WITHOUT NOTICE OR OBLIGATION.



Lloyd Industries Inc. 2017

# EXTRUDED ALUMINUM LOUVER

**MODEL: 4-DL 33° & 4-DLF 33°**

Water Penetration: 0.01oz (3.0g) at 1001 fpm recommended free area velocity.
Pressure Drop: 0.125 in. Wg. at 1001 fpm and 8668 SCFM
Free Area: 8.66 sq.ft. = 54% for 48"x48" test size

Velocity Through Free Area FPM standard air: 0.075 lbs per cu. ft.
Ratings do not include bird screen effect.

Below is an explanation of how to use the Data for the recommended Free Area Velocity of 1001 fpm.

**Louver size determination**

| _____cfm / 1001 _____fpm = _____ ft² | | |
|---|---|---|
| air flow volume | free area velocity @ beginning point of water penetration | Required Louver Free Area |
| **Select louver size from Free Area Chart below, based on required louver free area above** | | |
| **Determine pressure drop from Pressure Drop Chart based on required louver free area above** | | |

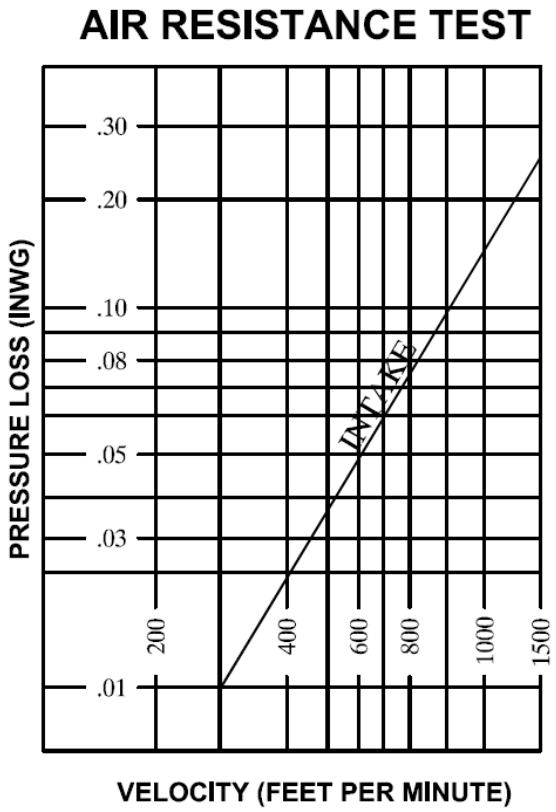


**FREE AREA IN SQ.FT.**

**WIDTH**

| HEIGHT | INCHES | 12 | 24 | 36 | 48 | 60 | 72 | 84 | 96 |
|---|---|---|---|---|---|---|---|---|---|
| | 12 | 0.26 | 0.63 | 1.1 | 1.38 | 1.75 | 2.08 | 2.45 | 2.83 |
| | 24 | 0.7 | 1.73 | 2.75 | 3.77 | 4.79 | 5.69 | 6.71 | 7.74 |
| | 36 | 1.16 | 2.85 | 4.55 | 6.24 | 7.93 | 9.41 | 11.1 | 12.79 |
| | 48 | 1.61 | 3.96 | 6.31 | 8.66 | 11.02 | 13.06 | 15.41 | 17.76 |
| | 60 | 2.08 | 5.05 | 8.05 | 11.04 | 14.03 | 16.65 | 19.65 | 22.64 |
| | 72 | 2.51 | 6.16 | 9.81 | 13.46 | 17.11 | 20.3 | 23.95 | 27.6 |
| | 84 | 2.96 | 7.26 | 11.56 | 15.86 | 20.17 | 23.93 | 28.23 | 32.53 |
| | 96 | 3.41 | 8.36 | 13.32 | 18.27 | 23.23 | 27.56 | 32.52 | 37.48 |

231 Commerce Dr. Montgomeryville, PA 18936
Tel: 215-412-4445 Fax: 215-412-4409
Email: lloydind@firedamper.com

138 Industrial Loop West, Orange Park, FL 32073
Tel: 904-541-1655 Fax: 904-541-1657
Email: lloydind1@firedamper.com

B1, 4/F., Luen Ming Hing Factory Building
36 Mok Cheong St.,
To Kwa Wan, Kowloon, H. K.
Tel: 852-2760-4188 Fax: 852-2760-4177
Email: tatanlexyim@lloydasia.com

Website: www.firedamper.com

*ALL STATED SPECIFICATIONS ARE SUBJECT TO UPDATE WITHOUT NOTICE OR OBLIGATION.



Lloyd Industries Inc. 2017

# LLOYD INDUSTRIES INC.

WWW.FIREDAMPER.COM

# EXTRUDED ALUMINUM LOUVER

## MODEL: 6-DL

**6" DEPTH DRAINABLE FRAME LOUVER**



## APPLICATION

The 6-DL is a 6" deep drainable louver designed for protection of higher air intake and exhaust velocities openings in building exterior walls. The blade design for the 6-DL performs better to channel water to the jambs which then directs the water to escape at the sill.

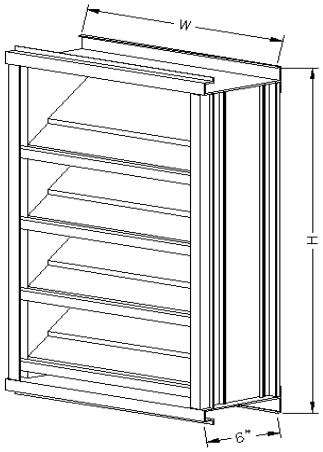


## SPECIFICATIONS

| | |
|---|---|
| **Frame:** | 0.081 thick extruded aluminum |
| | 6063-T5 mill finish |
| **Blade:** | 0.081 thick extruded aluminum |
| | 6063-T5 mill finish |
| **Blade Spacing:** | Approximately 4-3/4" center to center |
| | (except at head and sills) |
| **Fasteners:** | 10" x 3/4" tek screws |
| **Blade Angle:** | 35º |
| **Screen:** | Bird screen |
| | 1/2"×1/2" galvanized steel |
| **Flange:** | 1-1/4" |

## OPTIONS

Insect Screen 1/16" x 1/16" Aluminum

Bird Screen 1/2" x 1/2" Aluminum

| | |
|---|---|
| Finish: | Clear Anodized |
| | Bronze Anodized |
| | Powder Coat Paint |
| | Baked Enamel Paint |

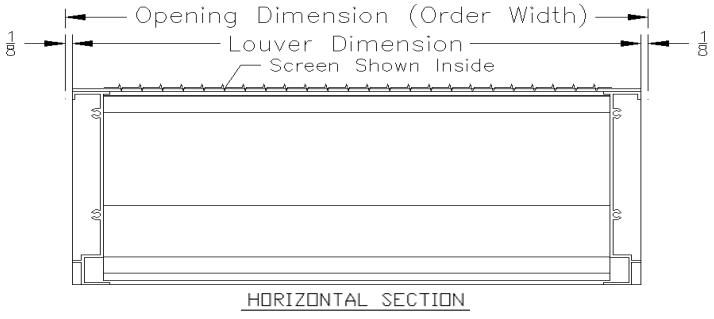


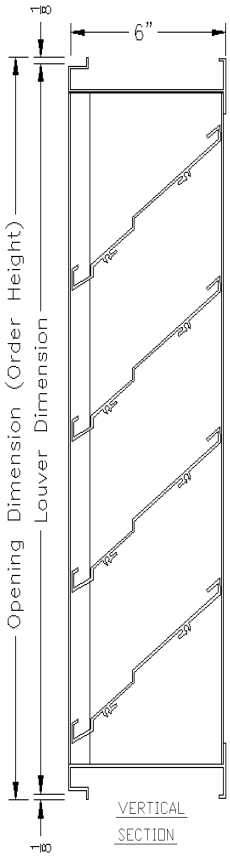


231 Commerce Dr. Montgomeryville, PA 18936
Tel: 215-412-4445 Fax: 215-412-4409
Email: lloydind@firedamper.com

138 Industrial Loop West, Orange Park, FL 32073
Tel: 904-541-1655 Fax: 904-541-1657
Email: lloydind1@firedamper.com

B1, 4/F., Luen Ming Hing Factory Building
36 Mok Cheong St.,
To Kwa Wan, Kowloon, H. K.
Tel: 852-2760-4188 Fax: 852-2760-4177
Email: tatanlexyim@lloydasia.com

Website: www.firedamper.com

*ALL STATED SPECIFICATIONS ARE SUBJECT TO UPDATE WITHOUT NOTICE OR OBLIGATION.



Lloyd Industries Inc. 2017

# LLOYD INDUSTRIES INC.

WWW.FIREDAMPER.COM

# EXTRUDED ALUMINUM LOUVER

## MODEL: 6-DLF

**6" DEPTH DRAINABLE FLANGED FRAME LOUVER**



## APPLICATION

The 6-DLF is a 6" deep drainable flanged frame louver designed for protection of higher air intake and exhaust velocities openings in building exterior walls. The blade design for 6-DLF performs better to channel water to the jambs which then directs the water to escape at the sill.

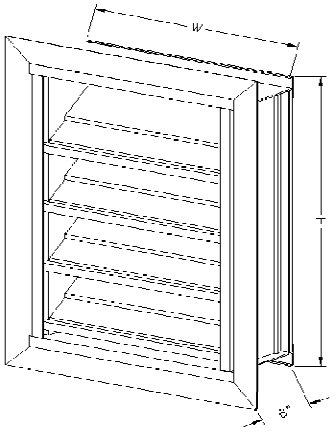


## SPECIFICATIONS

| | |
|---|---|
| **Frame:** | 0.081 thick extruded aluminum |
| | 6063-T5 mill finish |
| **Blade:** | 0.081 thick extruded aluminum |
| | 6063-T5 mill finish |
| **Blade Spacing:** | Approximately 4-3/4" center to center |
| | (except at head and sills) |
| **Fasteners:** | 10" x 3/4" tek screws |
| **Blade Angle:** | 35º |
| **Screen:** | Bird screen |
| | 1/2"×1/2" galvanized steel |
| **Flange:** | 1-1/4" |

## OPTIONS

Insect Screen 1/16" x 1/16" Aluminum

Bird Screen 1/2" x 1/2" Aluminum

| | |
|---|---|
| Finish: | Clear Anodized |
| | Bronze Anodized |
| | Powder Coat Paint |
| | Baked Enamel Paint |

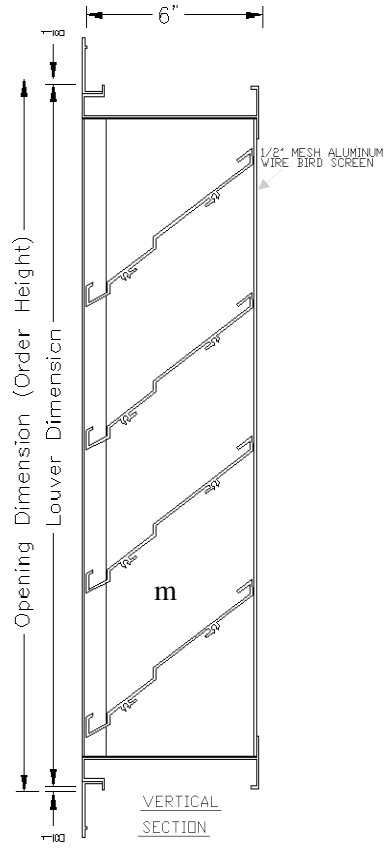


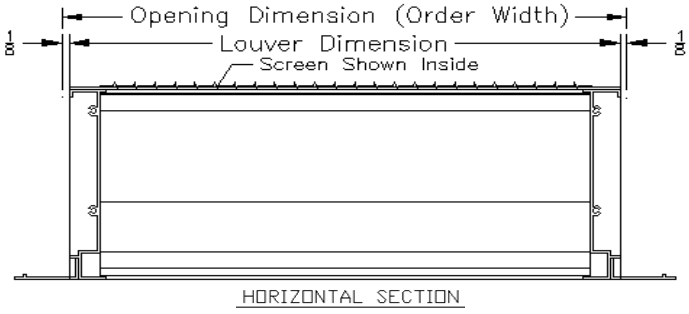



231 Commerce Dr. Montgomeryville, PA 18936
Tel: 215-412-4445 Fax: 215-412-4409
Email: lloydind@firedamper.com

138 Industrial Loop West, Orange Park, FL 32073
Tel: 904-541-1655 Fax: 904-541-1657
Email: lloydind1@firedamper.com

B1, 4/F., Luen Ming Hing Factory Building
36 Mok Cheong St.,
To Kwa Wan, Kowloon, H. K.
Tel: 852-2760-4188 Fax: 852-2760-4177
Email: tatanlexyim@lloydasia.com

Website: www.firedamper.com



*ALL STATED SPECIFICATIONS ARE SUBJECT TO UPDATE WITHOUT NOTICE OR OBLIGATION.





Lloyd Industries Inc. 2017

# EXTRUDED ALUMINUM LOUVER

**MODEL: 6-DL & 6-DLF**

Water Penetration: 0.01oz (3.0g) at 1250 (6.35m/s) fpm recommended free area velocity.
Pressure Drop: 0.21in.wg. at 1250 fpm and 11550 SCFM
Free Area: 9.24 sq.ft. = 58% for 48"x48" test size

Velocity Through Free Area FPM standard air: 0.075 lbs per cu. ft. Ratings do not include bird screen effect.

Below is an explanation of how to use the Data for the recommended Free Area Velocity of 1250 fpm.

**Louver size determination**

| _____cfm / _____fpm =_____$ft^2$ | | |
|---|---|---|
| air flow volume | free area velocity @ beginning point of water penetration | Required Louver Free Area |
| **Select louver size from Free Area Chart below, based on required louver free area above** | | |
| **Determine pressure drop from Pressure Drop Chart based on required louver free area above** | | |

**PRESSURE DROP**

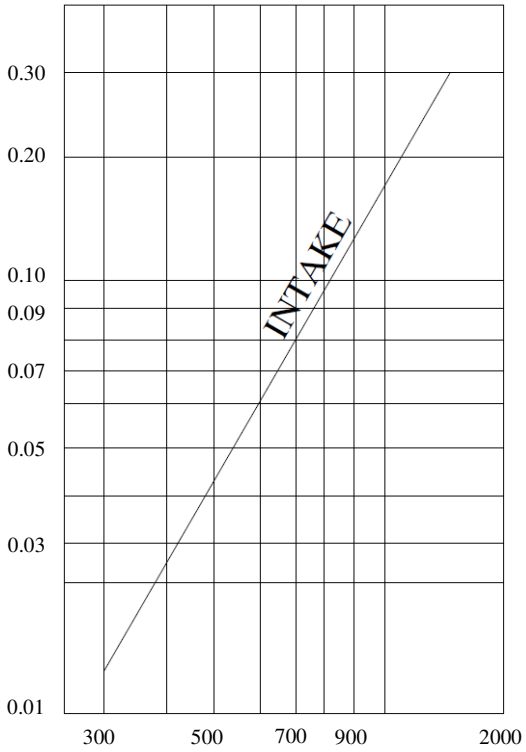


**FREE AREA IN SQ.FT.**

**WIDTH**

| HEIGHT / INCHES | 12 | 24 | 36 | 48 | 60 | 72 | 84 | 96 | 108 | 120 | 132 | 144 |
|---|---|---|---|---|---|---|---|---|---|---|---|---|
| 12 | 0.18 | 0.43 | 0.69 | 0.94 | 1.16 | 1.42 | 1.67 | 1.93 | 2.15 | 2.41 | 2.66 | 2.92 |
| 24 | 0.69 | 1.70 | 2.70 | 3.71 | 4.59 | 5.59 | 6.60 | 7.60 | 8.48 | 9.49 | 10.49 | 11.50 |
| 36 | 1.21 | 2.96 | 4.72 | 6.47 | 8.01 | 9.76 | 11.52 | 13.27 | 14.81 | 16.56 | 18.32 | 20.07 |
| 48 | 1.72 | 4.28 | 6.73 | 9.24 | 11.43 | 13.93 | 16.44 | 18.95 | 21.14 | 23.64 | 26.15 | 28.65 |
| 60 | 2.24 | 5.49 | 8.75 | 12.00 | 14.85 | 18.11 | 21.36 | 24.62 | 27.47 | 30.72 | 33.98 | 37.23 |
| 72 | 2.75 | 6.76 | 10.76 | 14.77 | 18.27 | 22.28 | 26.28 | 30.29 | 33.79 | 37.80 | 41.80 | 45.81 |
| 84 | 3.27 | 8.02 | 12.78 | 17.53 | 21.70 | 26.45 | 31.21 | 35.96 | 40.12 | 44.88 | 49.63 | 54.39 |
| 96 | 3.78 | 9.29 | 14.80 | 20.30 | 25.12 | 30.62 | 36.13 | 41.63 | 46.45 | 51.96 | 57.46 | 62.97 |
| 108 | 4.30 | 10.56 | 16.81 | 23.07 | 28.54 | 34.79 | 41.05 | 47.30 | 52.78 | 59.03 | 65.29 | 71.54 |
| 120 | 4.82 | 11.82 | 18.83 | 25.83 | 31.96 | 38.97 | 45.97 | 52.98 | 59.11 | 66.11 | 73.12 | 80.12 |
| 132 | 5.33 | 13.09 | 20.84 | 28.60 | 35.38 | 43.14 | 50.89 | 58.65 | 65.43 | 73.19 | 80.94 | 88.70 |
| 144 | 5.85 | 14.35 | 22.86 | 31.36 | 38.80 | 47.31 | 55.82 | 64.32 | 71.76 | 80.27 | 88.77 | 97.28 |

231 Commerce Dr. Montgomeryville, PA 18936
Tel: 215-412-4445 Fax: 215-412-4409
Email: lloydind@firedamper.com

138 Industrial Loop West, Orange Park, FL 32073
Tel: 904-541-1655 Fax: 904-541-1657
Email: lloydind1@firedamper.com

B1, 4/F., Luen Ming Hing Factory Building
36 Mok Cheong St.,
To Kwa Wan, Kowloon, H. K.
Tel: 852-2760-4188 Fax: 852-2760-4177
Email: tatanlexyim@lloydasia.com

Website: www.firedamper.com

*ALL STATED SPECIFICATIONS ARE SUBJECT TO UPDATE WITHOUT NOTICE OR OBLIGATION.



Lloyd Industries Inc. 2017

# CHEVRON BLADE LOUVER

## MODEL: 4-CBL & 4-CBLF


4-CBL


4-CBLF

**APPLICATION**

The 4-CBL & 4-CBLF are Chevron style blade louvers that channel water into jambs which guides the water through vertical down-spouts for escape at the sill.

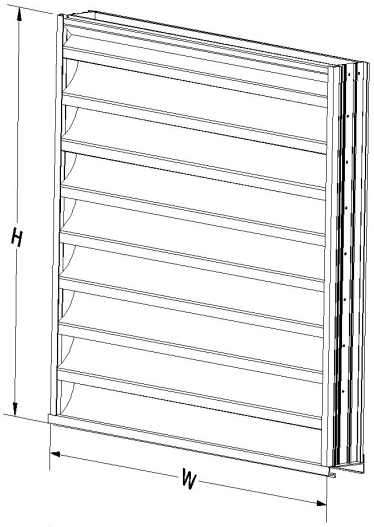


**SPECIFICATIONS**

| | |
|---|---|
| **Frame:** | 0.081 thick extruded aluminum |
| | 6063-T5 mill finish |
| | Approximately 4" blade spacing except at head and sill |
| | Corrosion resistant steel fasteners used at assembly |
| **Blade:** | 0.081 thick extruded aluminum |
| | 6063-T5 mill finish |
| **Screen:** | Bird screen |
| | 1/2"×1/2" galvanized steel |
| **Min. Height:** | 12" |
| **Max. Height:** | Consult factory for maximum size |

**OPTIONS**

Insect Screen 1/16" x 1/16" mesh Aluminum
Bird Screen 1/2" x 1/2" Aluminum
Finish: Clear Anodized
Bronze Anodized
Powder Coat Paint
Baked Enamel Paint

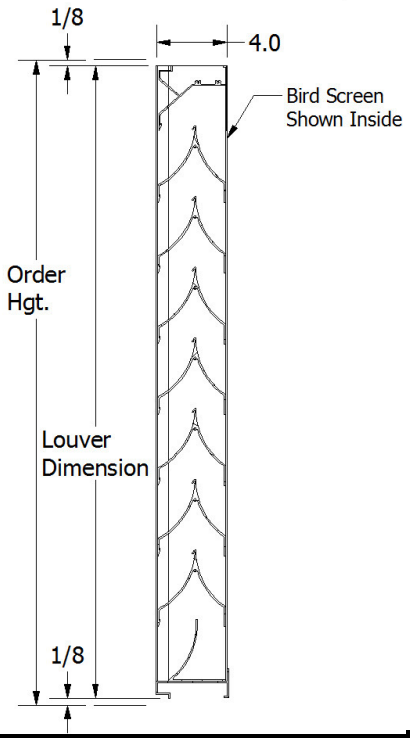


**1-1/4" Flanged: Only for 4-CBLF model**

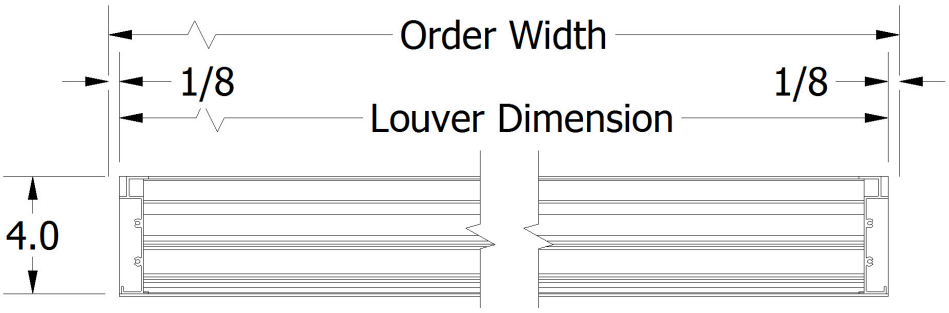


231 Commerce Dr. Montgomeryville, PA 18936
Tel: 215-412-4445 Fax: 215-412-4409
Email: lloydind@firedamper.com

138 Industrial Loop West, Orange Park, FL 32073
Tel: 904-541-1655 Fax: 904-541-1657
Email: lloydind1@firedamper.com

B1, 4/F., Luen Ming Hing Factory Building
36 Mok Cheong St.,
To Kwa Wan, Kowloon, H. K.
Tel: 852-2760-4188 Fax: 852-2760-4177
Email: tatanlexyim@lloydasia.com

Website: www.firedamper.com

*ALL STATED SPECIFICATIONS ARE SUBJECT TO UPDATE WITHOUT NOTICE OR OBLIGATION.



Lloyd Industries Inc. 2017

# LLOYD INDUSTRIES INC.

WWW.FIREDAMPER.COM

# GALVANIZED, STAINLESS AND COPPER LOUVER

## MODEL: 2-SRF-ML

**IMPACT RESISTANT LOUVER**



## APPLICATION

The 2-SRF-ML Stationary Louver is 2” deep with a Flange Frame. That is designed for the protection of high air intake and exhaust velocities in building exterior walls.

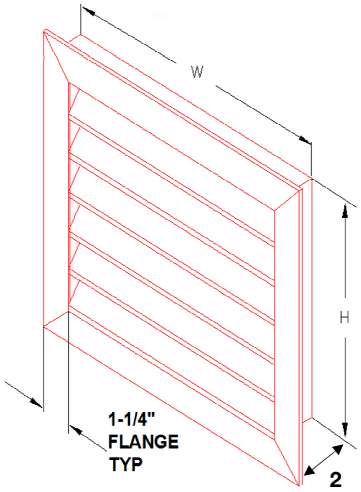


## SPECIFICATIONS

| | |
|---|---|
| **Frame:** | 22 Ga. galvanized steel |
| **Blade:** | 22 Ga. galvanized steel |
| **Blade Spacing:** | Approximately 3-1/4” center to center (except at head and sills) |
| **Fasteners:** | Spot welds |
| **Blade Angle:** | 36º |
| **Screen:** | Bird screen 1/2”×1/2” galvanized steel |
| **Flange:** | 1-1/4” |

## OPTIONS

| | |
|---|---|
| **Frame & Blade:** | 22 Ga. 316 stainless steel |
| | Copper |
| **Finish:** | Powder Coat Paint |
| | Baked Enamel Paint |

Insect Screen 1/16” x 1/16” galvanized steel

Bird Screen 1/2” x 1/2” Aluminum

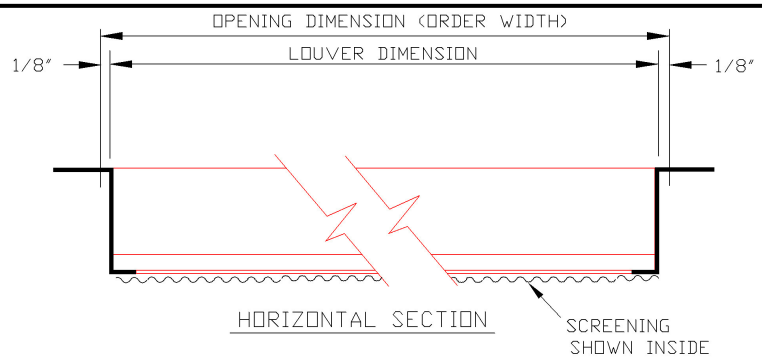


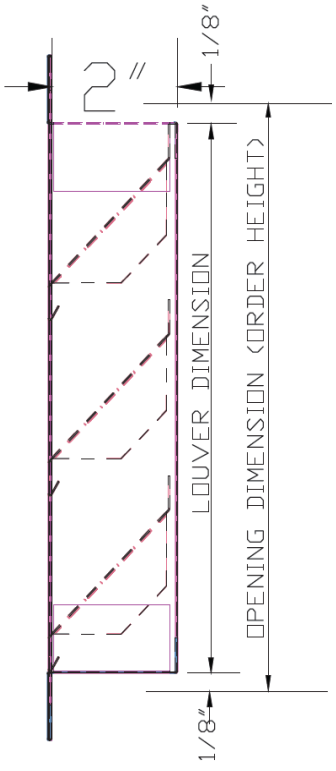


VERTICAL SECTION

231 Commerce Dr. Montgomeryville, PA 18936
Tel: 215-412-4445 Fax: 215-412-4409
Email: lloydind@firedamper.com

138 Industrial Loop West, Orange Park, FL 32073
Tel: 904-541-1655 Fax: 904-541-1657
Email: lloydind1@firedamper.com

B1, 4/F., Luen Ming Hing Factory Building
36 Mok Cheong St.,
To Kwa Wan, Kowloon, H. K.
Tel: 852-2760-4188 Fax: 852-2760-4177
Email: tatanlexyim@lloydasia.com

Website: www.firedamper.com

*ALL STATED SPECIFICATIONS ARE SUBJECT TO UPDATE WITHOUT NOTICE OR OBLIGATION.



Lloyd Industries Inc. 2017

# LLOYD INDUSTRIES INC.

WWW.FIREDAMPER.COM

# GALVANIZED, STAINLESS AND COPPER LOUVER

## MODEL: 4-SRF-ML

**IMPACT RESISTANT LOUVER**



## APPLICATION

The 4-SRF-ML Stationary Louver is 4" deep with a Flange Frame. That is designed for the protection of high air intake and exhaust velocities in building exterior walls.

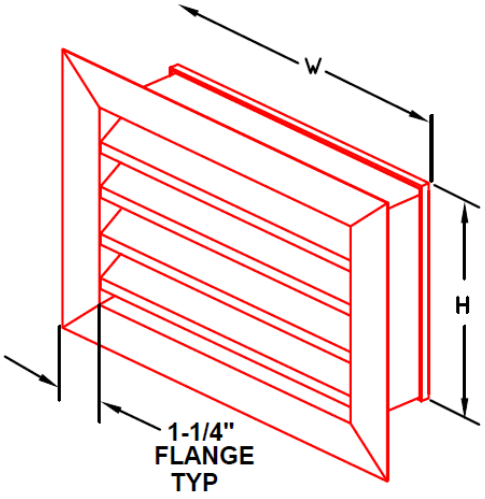


## SPECIFICATIONS

| | |
|---|---|
| **Frame:** | 22 Ga. galvanized steel |
| **Blade:** | 22 Ga. galvanized steel |
| **Blade Spacing:** | Approximately 3-1/4" center to center (except at head and sills) |
| **Fasteners:** | Spot weld |
| **Blade Angle:** | 36º |
| **Screen:** | Bird screen 1/2"×1/2" galvanized steel |
| **Flange:** | 1-1/4" |

## OPTIONS

| | |
|---|---|
| **Frame & Blade:** | 22 gauge 316 stainless steel |
| | Copper |
| **Finish:** | Powder Coat Paint |
| | Baked Enamel Paint |

Insect Screen 1/16" x 1/16" galvanized steel
Bird Screen 1/2" x 1/2" Aluminum

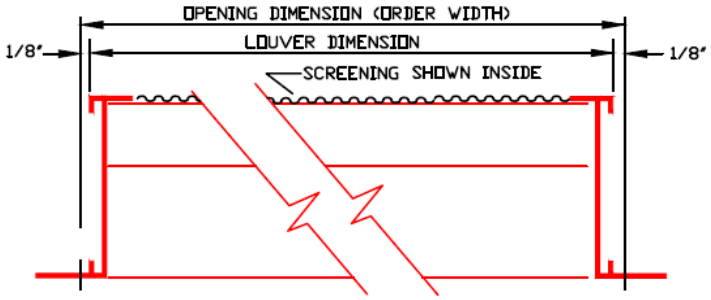


HORIZONTAL SECTION

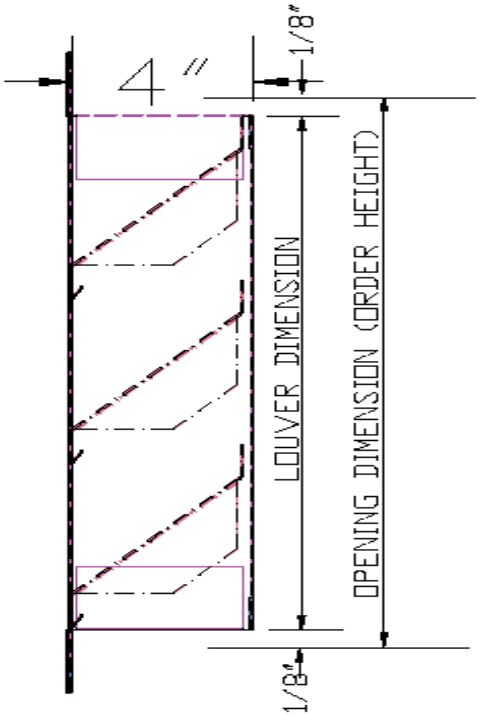


VERTICAL SECTION

231 Commerce Dr. Montgomeryville, PA 18936
Tel: 215-412-4445 Fax: 215-412-4409
Email: lloydind@firedamper.com

138 Industrial Loop West, Orange Park, FL 32073
Tel: 904-541-1655 Fax: 904-541-1657
Email: lloydind1@firedamper.com

B1, 4/F., Luen Ming Hing Factory Building
36 Mok Cheong St.,
To Kwa Wan, Kowloon, H. K.
Tel: 852-2760-4188 Fax: 852-2760-4177
Email: tatanlexyim@lloydasia.com

Website: www.firedamper.com

*ALL STATED SPECIFICATIONS ARE SUBJECT TO UPDATE WITHOUT NOTICE OR OBLIGATION.



Lloyd Industries Inc. 2017

# LLOYD INDUSTRIES INC.

WWW.FIREDAMPER.COM

# BACKDRAFT DAMPER



**MODELS:**
**LBD-1**
**LBDF-1 (with Rear Flange)**

## APPLICATION

The LBD-1 vertical/horizontal mounted Backdraft Damper that is designed to allow vertical/horizontal airflow and prevent reverse airflow. The damper is opened by air pressure differential and closed by gravity.

**OPTIONAL BLADE COUNTERWEIGHTS:**
Counterweights available on request

Note: Dampers will be provided less counterweights unless specified.

Optional part:

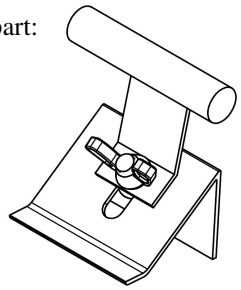

## STANDARD CONSTRUCTION

| | |
|---|---|
| **FRAME:** | 6063T5 Extruded aluminum |
| | Minimum wall thickness 16 Ga. |
| **BLADES TYPE:** | 6063T5 Extruded aluminum 16 Ga. |
| | counter balance rod holder |
| | Built into rear of blades |
| **SEALS:** | Vinyl blade |
| **AXLES:** | Cast aluminum |
| **LINKAGE:** | 16 Ga. x 5/8" wide aluminum |
| | Concealed in the channel frame |
| **ORIENTATION:** | Horizontal or vertical |
| **FINISH:** | Mill finish |

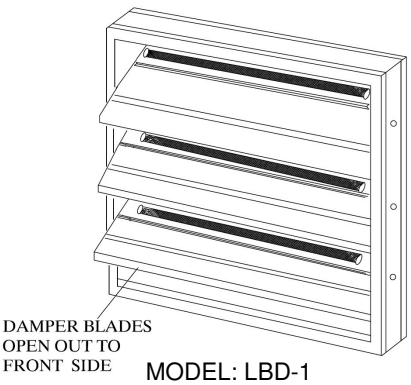


MODEL: LBD-1

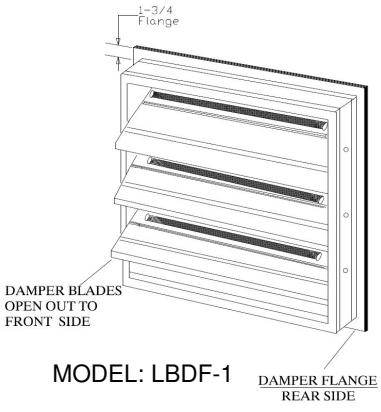


MODEL: LBDF-1

## MODEL AND MOUNTING SELECTION

MODEL: LBD-1
- Vertical Installation
- Flangeless Duct Mounting

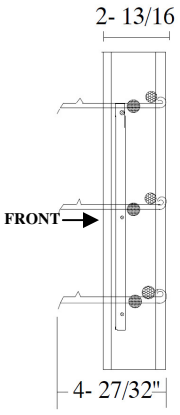


MODEL: LBDF-1
- Vertical Installation
- Flange Mount

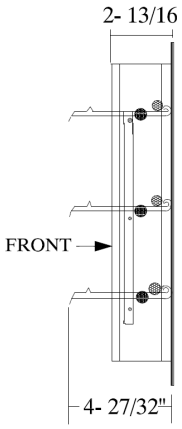


MODEL: LBD-1
- Horizontal Installation with Upward Airflow

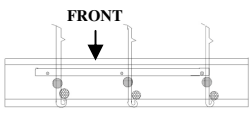


MODEL: LBDF-1
- Horizontal Installation with Upward Airflow

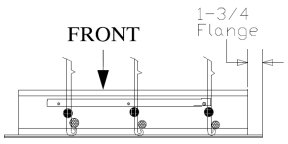


NOTE:
When used in fan discharge applications, damper should be at least half the fan diameter distance from fan discharge.

Damper is 1/4" less than ordered dimensions unless specified "ACTUAL SIZE".

| Single Section | | Multiple Section |
|---|---|---|
| Minimum Size (WxH) | Maximum Size (WxH) | Maximum Size (WxH) |
| 6"x6" | 36"x60" | UNLIMITED |

231 Commerce Dr. Montgomeryville, PA 18936
Tel: 215-412-4445 Fax: 215-412-4409
Email: lloydind@firedamper.com

138 Industrial Loop West, Orange Park, FL 32073
Tel: 904-541-1655 Fax: 904-541-1657
Email: lloydind1@firedamper.com

B1, 4/F., Luen Ming Hing Factory Building
36 Mok Cheong St.,
To Kwa Wan, Kowloon, H. K.
Tel: 852-2760-4188 Fax: 852-2760-4177
Email: tatanlexyim@lloydasia.com

Website: www.firedamper.com

*ALL STATED SPECIFICATIONS ARE SUBJECT TO UPDATE WITHOUT NOTICE OR OBLIGATION.



Lloyd Industries Inc. 2017

# BACKDRAFT DAMPER

**MODELS:**
**LBDF-2 (with Front Flange)**

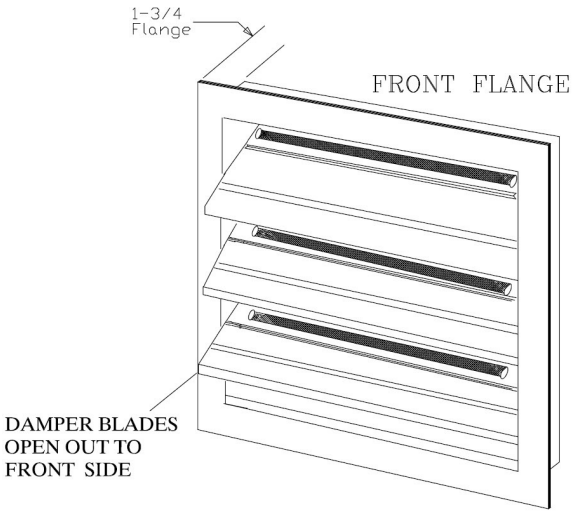


## APPLICATION

The LBD-2 is a vertical/horizontal mounted Backdraft Damper that is designed to allow vertical/horizontal airflow and prevent reverse airflow. The damper is opened by air pressure differential and closed by gravity.

**OPTIONAL BLADE COUNTERWEIGHTS:**
Counterweights available on request

Note: Dampers will be provided less counterweights unless specified.

Optional part:

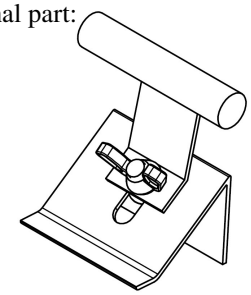

## STANDARD CONSTRUCTION

**FRAME:** 6063T5 Extruded aluminum
Minimum wall thickness 16 Ga.

**BLADES TYPE:** 6063T5 Extruded aluminum 16 Ga.
counter balance rod holder
Built into rear of blades

**SEALS:** Vinyl blade

**AXLES:** Cast aluminum

**LINKAGE:** 16 Ga. x 5/8" wide aluminum
concealed in the channel frame

**ORIENTATION:** Horizontal or vertical

**FINISH:** Mill finish

### MODEL AND MOUNTING SELECTION

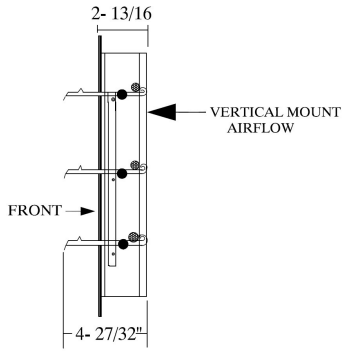


MODEL: LBDF-2
- Vertical Installation
- Flangeless Duct Mounting

MODEL: LBDF-2
- Horizontal Installation

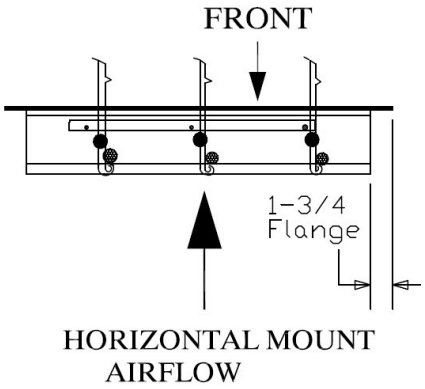


| Single Section | | Multiple Section |
|---|---|---|
| Minimum Size (WxH) | Maximum Size (WxH) | Maximum Size (WxH) |
| 6"x6" | 36"x60" | UNLIMITED |

NOTE:
When used in fan discharge applications, damper should be at least half the fan diameter distance from fan discharge.

Damper is 1/4" less than ordered dimensions unless specified "ACTUAL SIZE".

231 Commerce Dr. Montgomeryville, PA 18936
Tel: 215-412-4445 Fax: 215-412-4409
Email: lloydind@firedamper.com

138 Industrial Loop West, Orange Park, FL 32073
Tel: 904-541-1655 Fax: 904-541-1657
Email: lloydind1@firedamper.com

B1, 4/F., Luen Ming Hing Factory Building
36 Mok Cheong St.,
To Kwa Wan, Kowloon, H. K.
Tel: 852-2760-4188 Fax: 852-2760-4177
Email: tatanlexyim@lloydasia.com

Website: www.firedamper.com

*ALL STATED SPECIFICATIONS ARE SUBJECT TO UPDATE WITHOUT NOTICE OR OBLIGATION.



Lloyd Industries Inc. 2017

# BACKDRAFT DAMPER ASSEMBLY

**MODELS:**
**LBD-1 PARALLEL BLADE**
**BACKDRAFT DAMPER ASSEMBLY**

Exhaust Air

Combination assemblies backdraft damper (LBD-1-V) louver ( 2" 4" or 6") (Flanged) 16 Ga. galvanized steel sleeve (Sleeve length is based on wall thickness and louver depth)

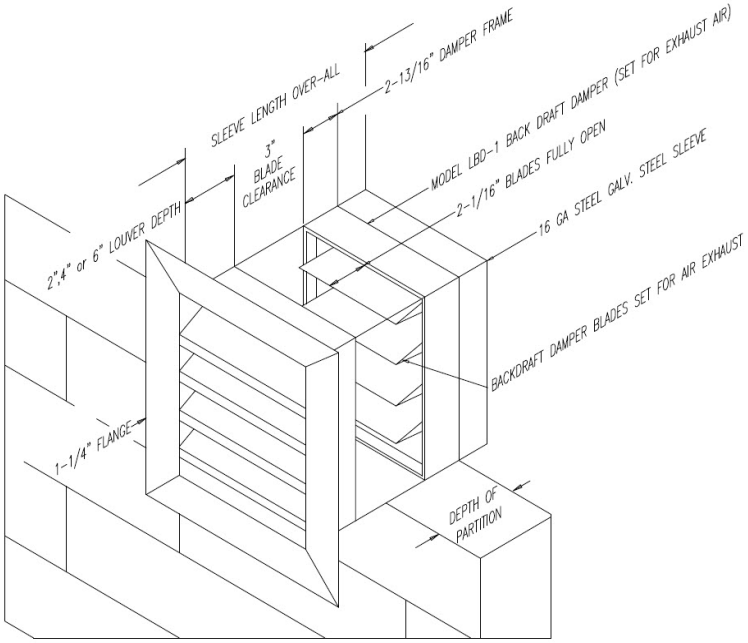


| Single Section | | Multiple Section |
|---|---|---|
| Minimum Size (WxH) | Maximum Size (WxH) | Maximum Size (WxH) |
| 6"x6" | 60"x60" | UNLIMITED |

Intake Air

Combination assemblies backdraft damper (LBD-1-V) louver ( 2" 4" or 6") (Flanged) 16 Ga. galvanized steel sleeve (Sleeve length is based on wall thickness and louver depth)

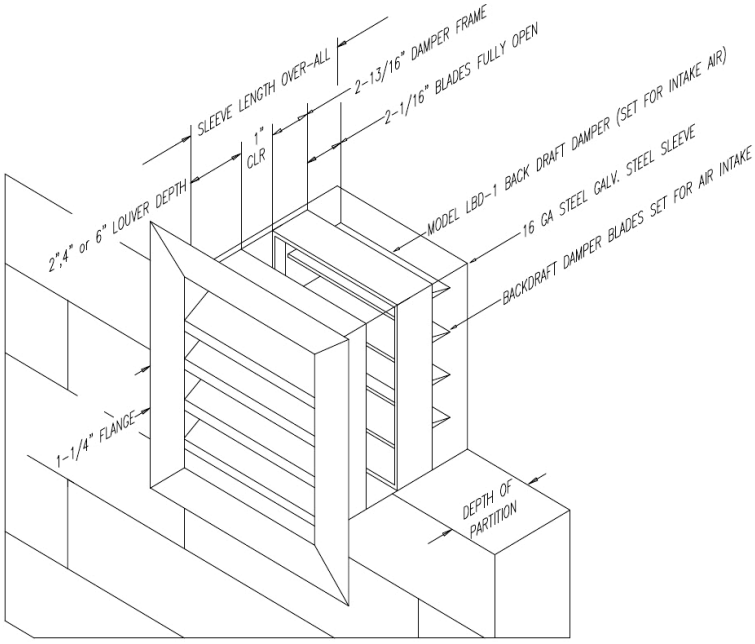


| Single Section | | Multiple Section |
|---|---|---|
| Minimum Size (WxH) | Maximum Size (WxH) | Maximum Size (WxH) |
| 6"x6" | 60"x60" | UNLIMITED |

231 Commerce Dr. Montgomeryville, PA 18936
Tel: 215-412-4445 Fax: 215-412-4409
Email: lloydind@firedamper.com

138 Industrial Loop West, Orange Park, FL 32073
Tel: 904-541-1655 Fax: 904-541-1657
Email: lloydind1@firedamper.com

B1, 4/F., Luen Ming Hing Factory Building
36 Mok Cheong St.,
To Kwa Wan, Kowloon, H. K.
Tel: 852-2760-4188 Fax: 852-2760-4177
Email: tatanlexyim@lloydasia.com

Website: www.firedamper.com

*ALL STATED SPECIFICATIONS ARE SUBJECT TO UPDATE WITHOUT NOTICE OR OBLIGATION.



Lloyd Industries Inc. 2017

# BACKDRAFT DAMPER

## OPERATION OF OPTIONAL BLADE COUNTERWEIGHTS:

Figure 1

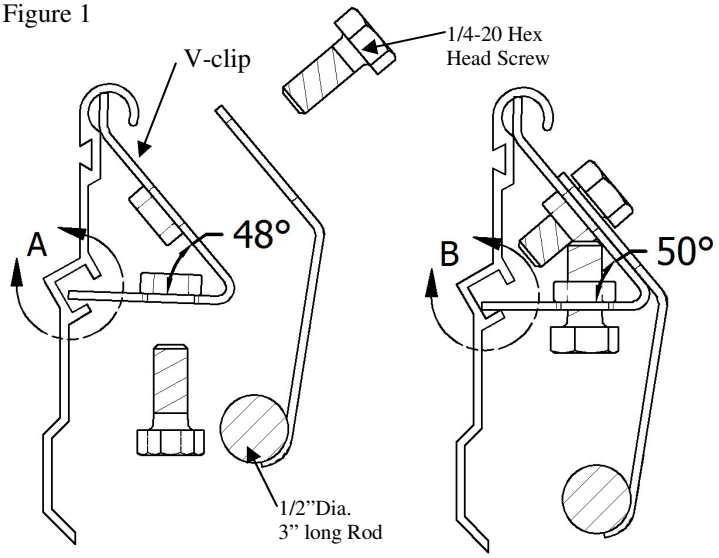


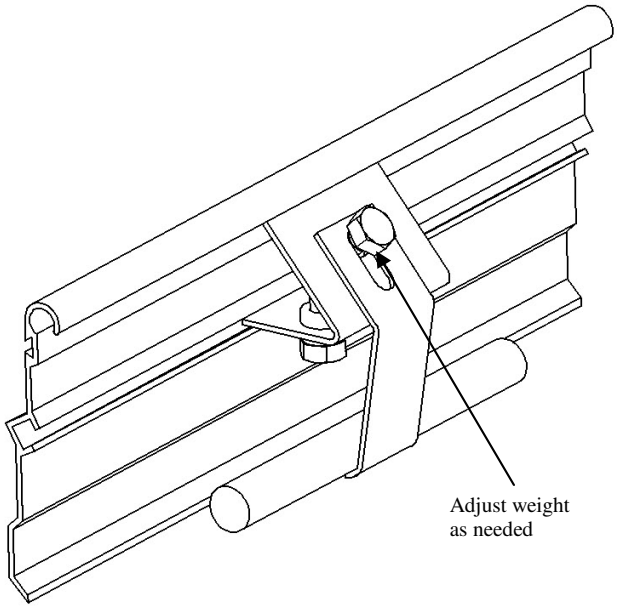


Figure 1 shows how the location of the rod can increase the weight of the blade. As a result, the damper blade stays close.

Figure 2

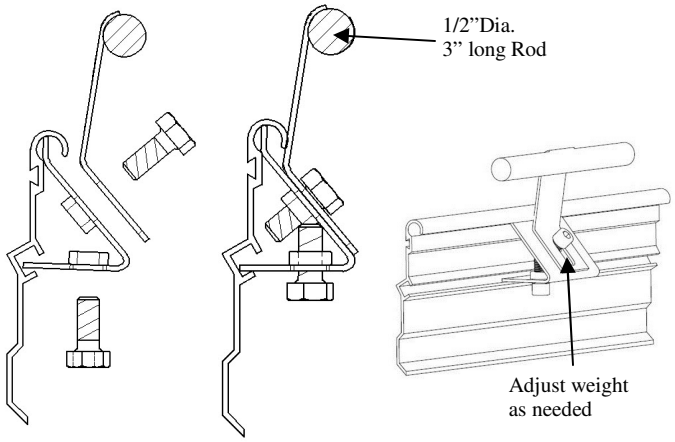


Figure 2 shows the rod on the opposite direction. At this location, the rod helps to increase the gravity instead of the blade's weight. As a result, the damper blade stays open.

Figure 3

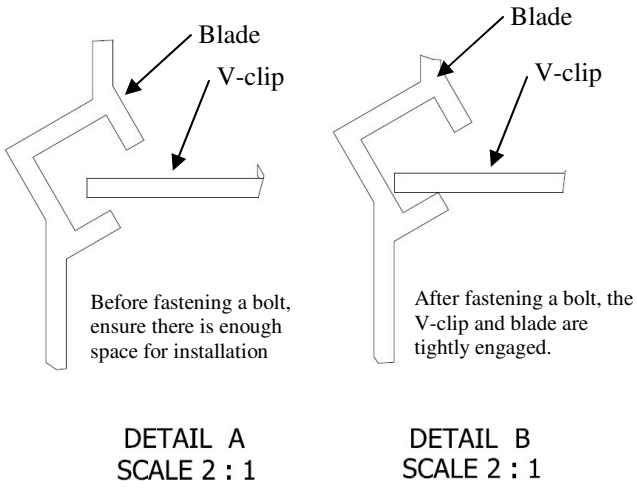


Figure 3 illustrates how the V-clip and blade are engaged.

231 Commerce Dr. Montgomeryville, PA 18936
Tel: 215-412-4445 Fax: 215-412-4409
Email: lloydind@firedamper.com

138 Industrial Loop West, Orange Park, FL 32073
Tel: 904-541-1655 Fax: 904-541-1657
Email: lloydind1@firedamper.com

B1, 4/F., Luen Ming Hing Factory Building
36 Mok Cheong St.,
To Kwa Wan, Kowloon, H. K.
Tel: 852-2760-4188 Fax: 852-2760-4177
Email: tatanlexyim@lloydasia.com

Website: www.firedamper.com

*ALL STATED SPECIFICATIONS ARE SUBJECT TO UPDATE WITHOUT NOTICE OR OBLIGATION.



Lloyd Industries Inc. 2017

# LLOYD INDUSTRIES INC.

WWW.FIREDAMPER.COM

# ADJUSTABLE BACKDRAFT ROUND DAMPER



**MODELS:**
**AC 30-BRD**
**SINGLE BLADE**
**ROUND BACKDRAFT DAMPER**

## APPLICATION

The AC 30-BRD is a single blade spiral duct round backdraft damper. This manual balancing damper is designed for round ductwork applications and uses in low pressure and velocity commercial HVAC systems.

## STANDARD CONSTRUCTION

**FRAME:** 6" Deep 22/20 Ga. galvanized steel roll formed and welded double beaded for rigidity and spiral duct connections

**BLADES TYPE:** Single blade 22 Ga. galvanized Single "V" formed stiffener

**SEALS:** Low leakage closed cell neoprene

**BEARINGS:** Non-metallic celcon

**AXLES:** Zinc plated steel

**FINISH:** Mill galvanized

**STANDARD EXTENDED SHAFT:**
1/2 inch round x 6" long zinc plated steel shaft extending 3 inches beyond the air control frame

**OPTIONS:**
Long drive axle extending 4" beyond damper frame
Bronze bearing
Stainless steel construction

| Single Section | |
|---|---|
| Minimum Size (Diameter) | Maximum Size (Diameter) |
| 4" | 24" |

Sizing:
Damper supplied:
Order diameter less 1/4"

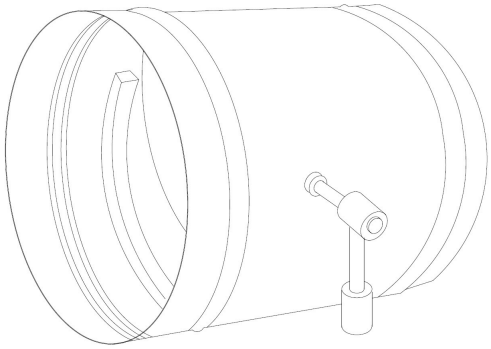

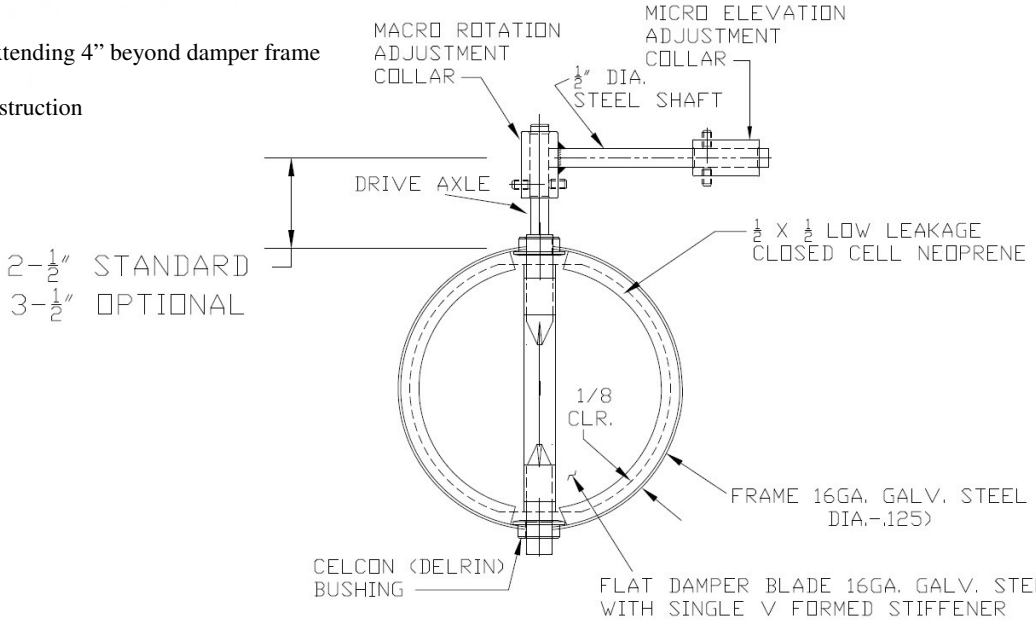


231 Commerce Dr. Montgomeryville, PA 18936
Tel: 215-412-4445 Fax: 215-412-4409
Email: lloydind@firedamper.com

138 Industrial Loop West, Orange Park, FL 32073
Tel: 904-541-1655 Fax: 904-541-1657
Email: lloydind1@firedamper.com

B1, 4/F., Luen Ming Hing Factory Building
36 Mok Cheong St.,
To Kwa Wan, Kowloon, H. K.
Tel: 852-2760-4188 Fax: 852-2760-4177
Email: tatanlexyim@lloydasia.com

Website: www.firedamper.com

*ALL STATED SPECIFICATIONS ARE SUBJECT TO UPDATE WITHOUT NOTICE OR OBLIGATION.



Lloyd Industries Inc. 2017

# ADJUSTABLE BACKDRAFT ROUND DAMPER

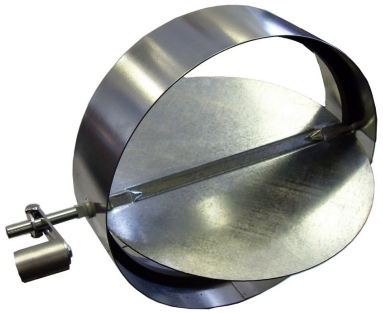

**MODELS:**
**AC 40-BRD**
**SINGLE BLADE**
**ROUND BACKDRAFT DAMPER**

## APPLICATION

The AC 40-BRD is a single blade spiral duct round backdraft damper. This manual balancing damper is designed for round ductwork applications and uses in low pressure and velocity commercial HVAC systems.

## STANDARD CONSTRUCTION

**FRAME:** 4" Deep 16 Ga. galvanized steel roll formed and welded

**BLADES TYPE:** Single blade
22 Ga. galvanized
Single "V" formed stiffener

**SEALS:** Low leakage closed cell neoprene

**BEARINGS:** Non-metallic celcon

**AXLES:** Zinc plated steel

**FINISH:** Mill galvanized

**STANDARD EXTENDED SHAFT:**
1/2 inch round x 6" long zinc plated steel shaft extending 3 inches beyond the air control frame

**OPTIONS:**
Long drive axle extending 4" beyond damper frame
Bronze bearing
Stainless steel construction

| Single Section | |
|---|---|
| Minimum Size (Diameter) | Maximum Size (Diameter) |
| 4" | 24" |

Sizing:
Damper supplied:
Order diameter less 1/4"

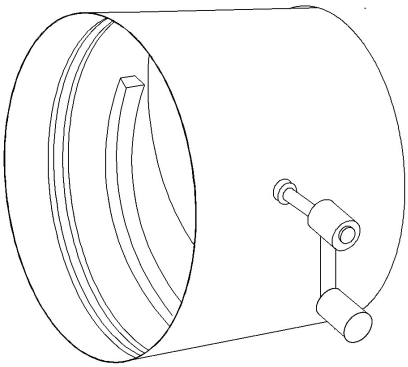

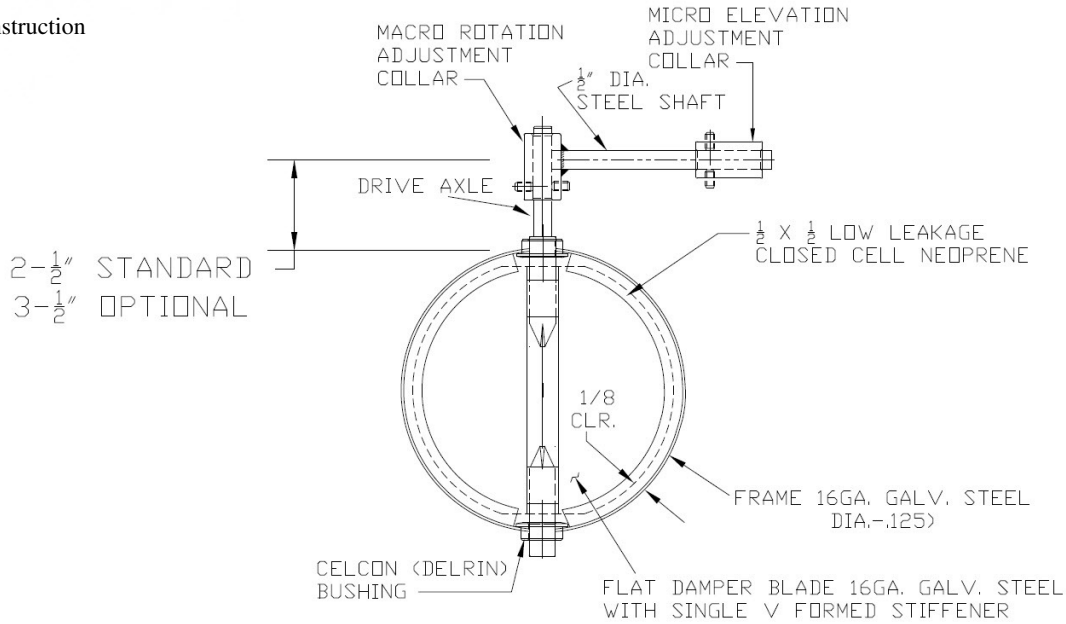


231 Commerce Dr. Montgomeryville, PA 18936
Tel: 215-412-4445 Fax: 215-412-4409
Email: lloydind@firedamper.com

138 Industrial Loop West, Orange Park, FL 32073
Tel: 904-541-1655 Fax: 904-541-1657
Email: lloydind1@firedamper.com

B1, 4/F., Luen Ming Hing Factory Building
36 Mok Cheong St.,
To Kwa Wan, Kowloon, H. K.
Tel: 852-2760-4188 Fax: 852-2760-4177
Email: tatanlexyim@lloydasia.com

Website: www.firedamper.com

*ALL STATED SPECIFICATIONS ARE SUBJECT TO UPDATE WITHOUT NOTICE OR OBLIGATION.



Lloyd Industries Inc. 2017

# EXTRUDED ALUMINUM BRICK VENTS

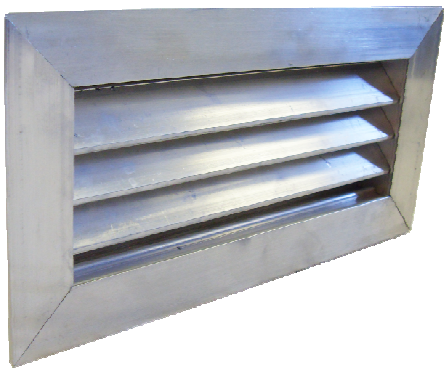

**MODELS:**
**1-BVF**
**STORM RESISTANT**
**(FLANGED)**

## APPLICATION

The 1-BVF is an extruded aluminum brick vent with flange. Extruded construction provides a quality finished appearance. A high water stop at the rear and deep overlapping blades with storm stops provide maximum resistance to rain.

## STANDARD CONSTRUCTION

**FRAME:** 1/8" Thick extruded aluminum 6063 T6 Construction with 1" wall flange

**BLADES:** 1/8" thick extruded aluminum 6063 T6 construction

**BLADE CENTERS:** 1" Centers at 45° head and sill spacing not to exceed frame flange dimension for maximum water resistance

**ASSEMBLY:** Aluminum 18x16 MESH corrosion resistant

**FINISH:** Mill finish

**OPTIONAL FINISHES:**
Clear Anodize
Black enamel
KYNAR
Bronze Anodize

**SIZES:**
Minimum Width 4"
Minimum Height 2-1/4"
Maximum single section: Unlimited

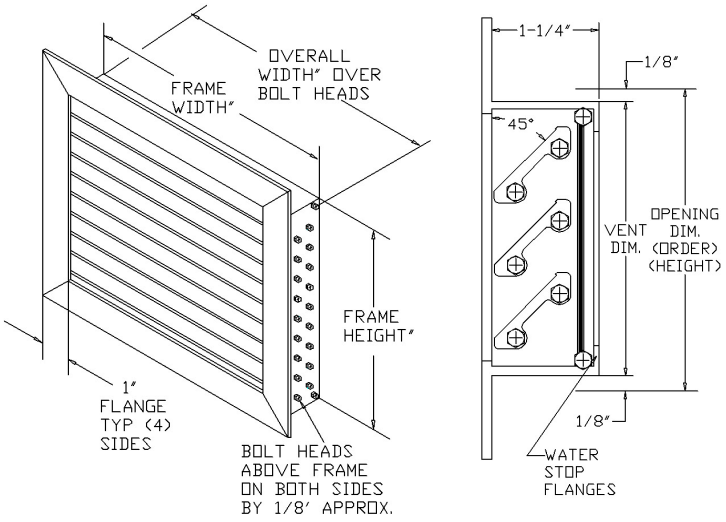


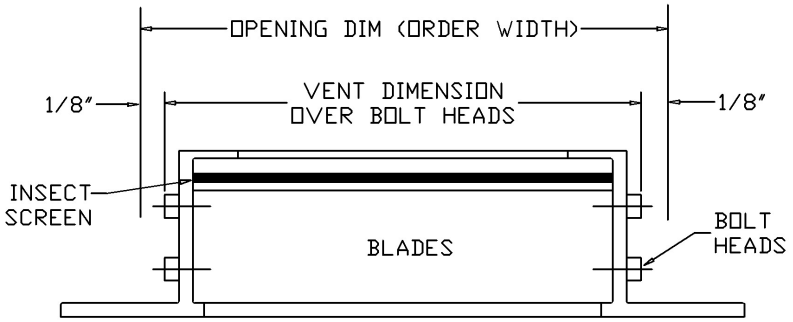


Brick vent will be supplied as order width –1/4" x order height –1/4" unless specified "actual size.

231 Commerce Dr. Montgomeryville, PA 18936
Tel: 215-412-4445 Fax: 215-412-4409
Email: lloydind@firedamper.com

138 Industrial Loop West, Orange Park, FL 32073
Tel: 904-541-1655 Fax: 904-541-1657
Email: lloydind1@firedamper.com

B1, 4/F., Luen Ming Hing Factory Building
36 Mok Cheong St.,
To Kwa Wan, Kowloon, H. K.
Tel: 852-2760-4188 Fax: 852-2760-4177
Email: tatanlexyim@lloydasia.com

Website: www.firedamper.com

*ALL STATED SPECIFICATIONS ARE SUBJECT TO UPDATE WITHOUT NOTICE OR OBLIGATION.



Lloyd Industries Inc. 2017

# LLOYD INDUSTRIES INC.

WWW.FIREDAMPER.COM

# EXTRUDED ALUMINUM BRICK VENTS

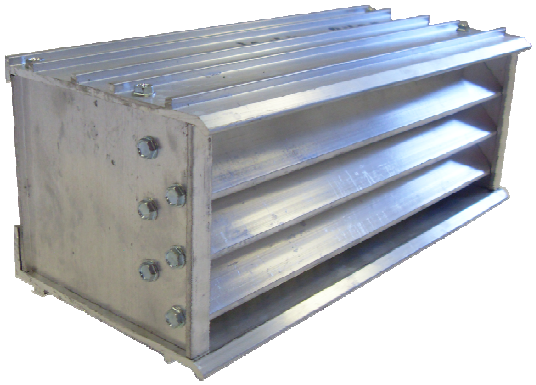

**MODELS:**
**4-BVCF**
**STORM RESISTANT**
**(CHANNEL FRAME)**

## APPLICATION

The 4-BVCF is an extruded aluminum brick vent with channel frame. Extruded construction provides a quality finished appearance. A high water stop at the rear and deep overlapping blades with storm stops provide maximum resistance to rain.

## STANDARD CONSTRUCTION

**FRAME:** 1/8" Thick extruded aluminum 6063 T6 Construction with 1/4" drip ledge top and bottom

**BLADES:** 1/8" thick extruded aluminum 6063 T6 construction

**BLADE CENTERS:** 1" Centers at 45°
head and sill spacing not to exceed frame flange dimension for maximum water resistance

**ASSEMBLY:** Aluminum 18x16 MESH corrosion resistant

**FINISH:** Mill finish

**OPTIONAL FINISHES:**
Clear Anodize
Black Enamel
KYNAR
Bronze Anodize

**SIZES:**
Minimum Width 4"
Minimum Height 2-1/4"
Maximum single section: Unlimited

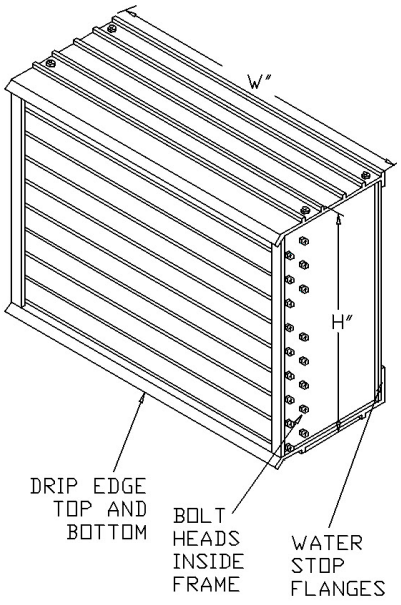


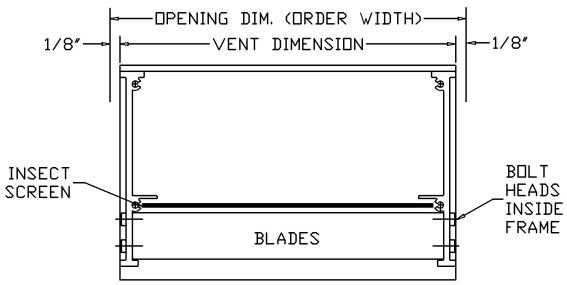


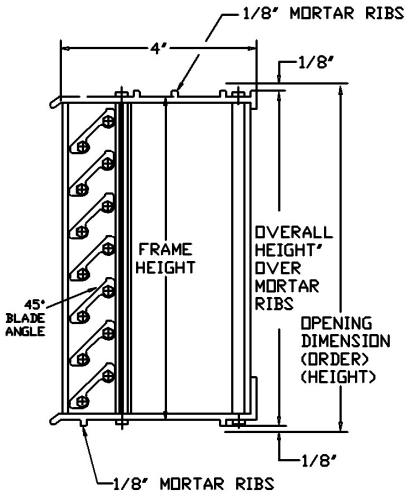


Brick vent will be supplied as order width –1/4" x order height –1/4" unless specified "actual size.


231 Commerce Dr. Montgomeryville, PA 18936
Tel: 215-412-4445 Fax: 215-412-4409
Email: lloydind@firedamper.com

138 Industrial Loop West, Orange Park, FL 32073
Tel: 904-541-1655 Fax: 904-541-1657
Email: lloydind1@firedamper.com

B1, 4/F., Luen Ming Hing Factory Building
36 Mok Cheong St.,
To Kwa Wan, Kowloon, H. K.
Tel: 852-2760-4188 Fax: 852-2760-4177
Email: tatanlexyim@lloydasia.com

Website: www.firedamper.com



*ALL STATED SPECIFICATIONS ARE SUBJECT TO UPDATE WITHOUT NOTICE OR OBLIGATION.





Lloyd Industries Inc. 2017

# STUD PROTECTORS

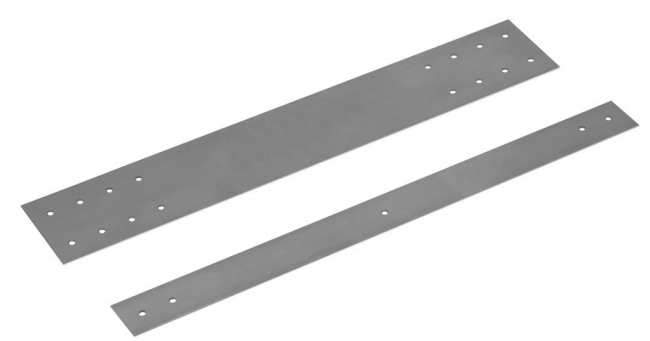

## APPLICATION

Lloyd's Stud protectors are plate protectors with nail holes that are used over studs and joists to protect the pipe from being damaged by drywall screws. Manufactured from 16 Gauge Galvanized Steel.
.

### 16-Hole Pattern (3"x18" Plate) STANDARD CONSTRUCTION

Fabricated using 16 gauge galvanized steel
Plate Size: 3" Width x 18" Long
Hole Size: 3/16" Diameter

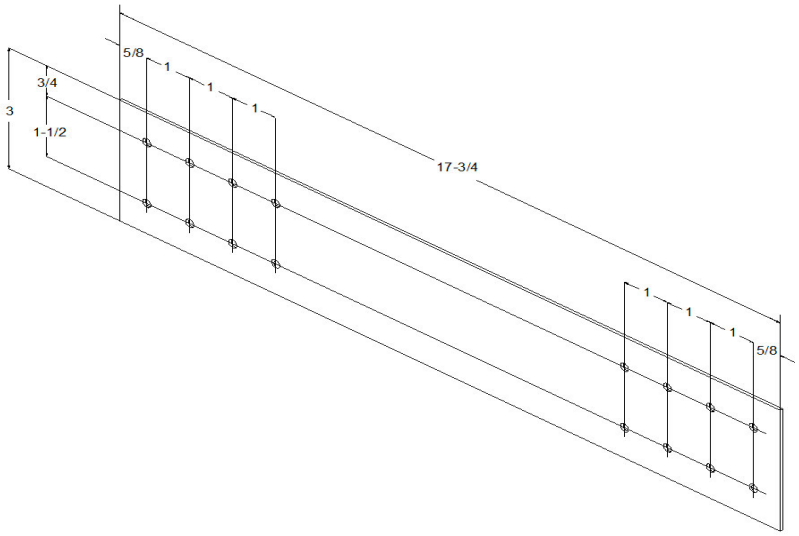


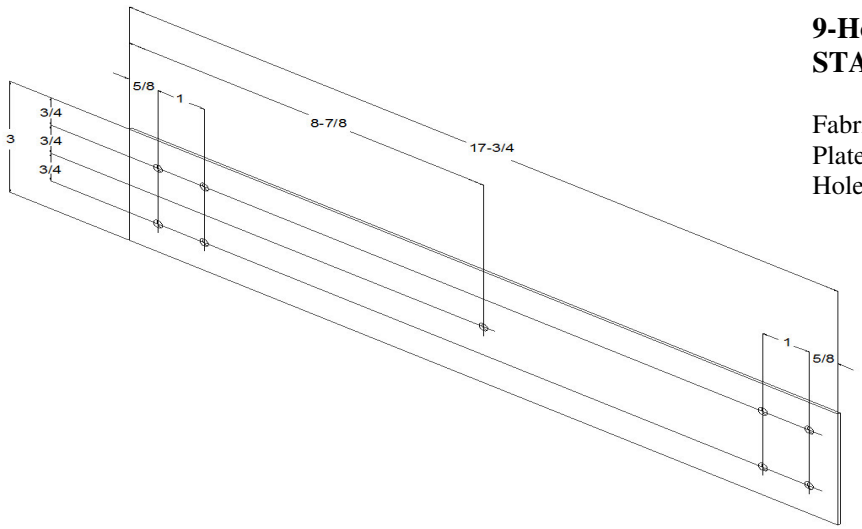


### 9-Hole Pattern (3"x18" Plate) STANDARD CONSTRUCTION

Fabricated using 16 gauge galvanized steel
Plate Size: 3" Width x 18" Long
Hole Size: 3/16" Diameter

231 Commerce Dr. Montgomeryville, PA 18936
Tel: 215-412-4445 Fax: 215-412-4409
Email: lloydind@firedamper.com

138 Industrial Loop West, Orange Park, FL 32073
Tel: 904-541-1655 Fax: 904-541-1657
Email: lloydind1@firedamper.com

B1, 4/F., Luen Ming Hing Factory Building
36 Mok Cheong St.,
To Kwa Wan, Kowloon, H. K.
Tel: 852-2760-4188 Fax: 852-2760-4177
Email: tatanlexyim@lloydasia.com

Website: www.firedamper.com

*ALL STATED SPECIFICATIONS ARE SUBJECT TO UPDATE WITHOUT NOTICE OR OBLIGATION.



Lloyd Industries Inc. 2017

# STUD PROTECTORS

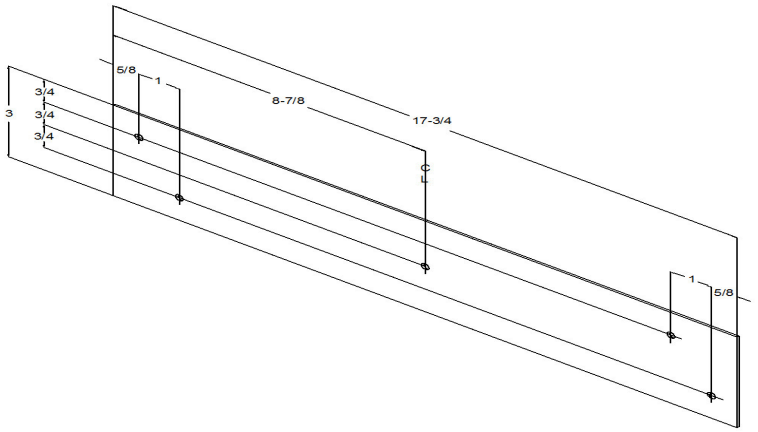


**5-Hole Pattern (3”x18” Plate)**
**STANDARD CONSTRUCTION**

Fabricated using 16 gauge galvanized steel
Plate Size: 3” Width x 18” Long
Hole Size: 3/16” Diameter

---

**5-Hole Pattern (1-1/2”x18” Plate)**
**STANDARD CONSTRUCTION**

Fabricated using 16 gauge galvanized steel
Plate Size: 1-1/2” Width x 18” Long
Hole Size: 3/16” Diameter

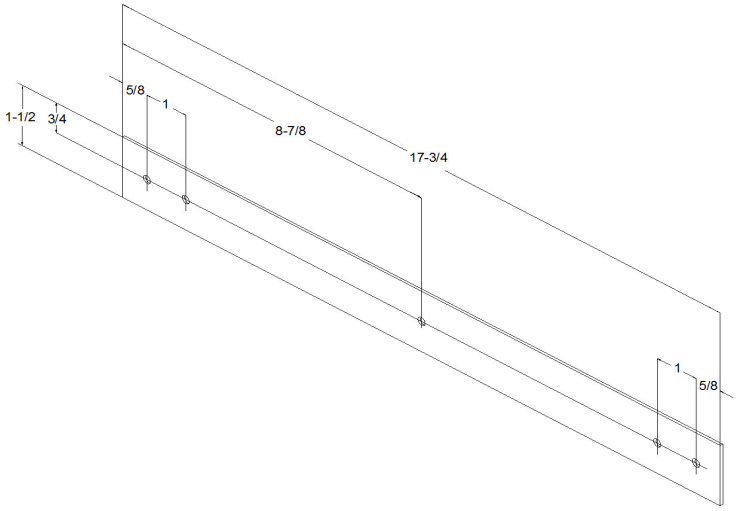


---

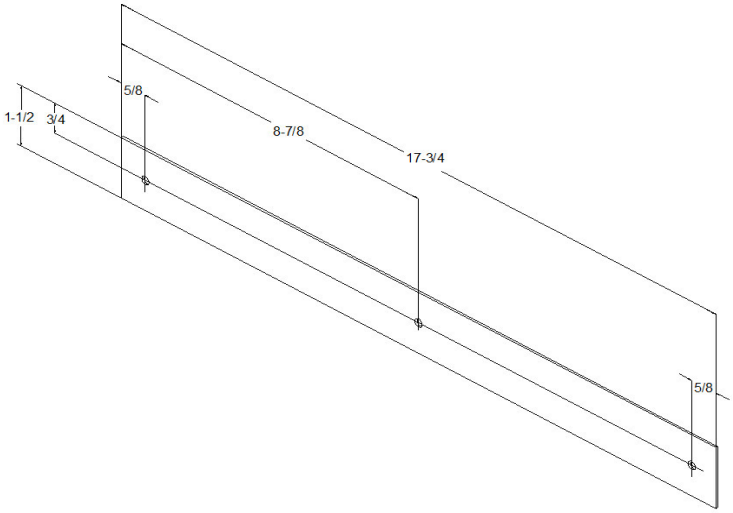


**3-Hole Pattern (1-1/2”x18” Plate)**
**STANDARD CONSTRUCTION**

Fabricated using 16 gauge galvanized steel
Plate Size: 1-1/2” Width x 18” Long
Hole Size: 3/16” Diameter

231 Commerce Dr. Montgomeryville, PA 18936
Tel: 215-412-4445 Fax: 215-412-4409
Email: lloydind@firedamper.com

138 Industrial Loop West, Orange Park, FL 32073
Tel: 904-541-1655 Fax: 904-541-1657
Email: lloydind1@firedamper.com

B1, 4/F., Luen Ming Hing Factory Building
36 Mok Cheong St.,
To Kwa Wan, Kowloon, H. K.
Tel: 852-2760-4188 Fax: 852-2760-4177
Email: tatanlexyim@lloydasia.com

Website: www.firedamper.com

*ALL STATED SPECIFICATIONS ARE SUBJECT TO UPDATE WITHOUT NOTICE OR OBLIGATION.



Lloyd Industries Inc. 2017

# SECURITY BARS

**MODELS:**
**SB-1**
**SB-2**

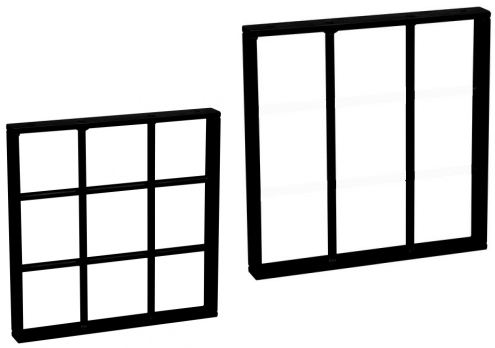

## APPLICATION

The SB-1/SB-2 are Lloyd's Security Bars. Installing security bars into dampers to guard access to restricted areas.
The standard product is steel or cold rolled steel construction and metal inert gas welded frame and bars.

## STANDARD CONSTRUCTION

| | |
|---|---|
| **FRAME:** | All steel construction |
| | Solid 3/8" x 1-1/2" |
| | Rectangular steel bars |
| **SECURITY BARS:** | Solid 1/2" diameter steel |
| | Bar secured on 6" centers |
| **CONSTRUCTION:** | Metal inert gas welded frame and bars |
| **MOUNTINGHOLES:** | 3/8" Bolt clearance holes provided |
| | (13/32 Diameter holes) |
| **FINISHES:** | (1) Unfinished<br>(2) Painted |
| **SIZES:** | Unlimited |
| **INSTALLATION:** | Installed in sleeve or curbs |

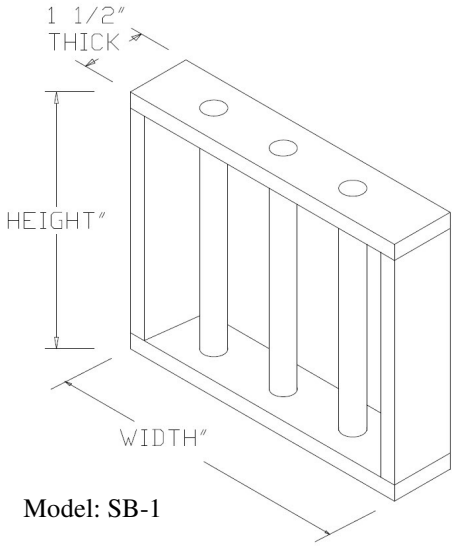


Model: SB-1

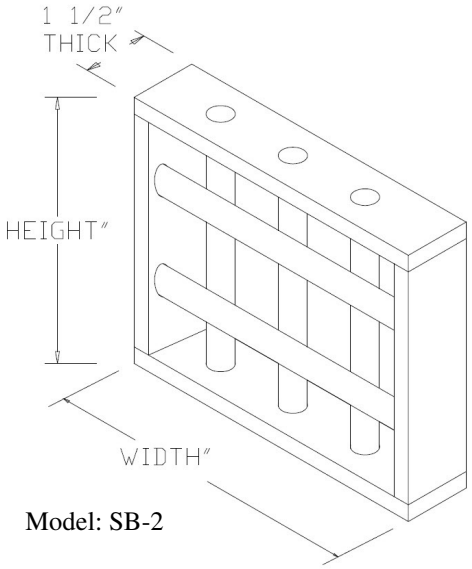


Model: SB-2

**Note: Consult Lloyd Industries if options are desired other than the standard options listed above.**

231 Commerce Dr. Montgomeryville, PA 18936
Tel: 215-412-4445 Fax: 215-412-4409
Email: lloydind@firedamper.com

138 Industrial Loop West, Orange Park, FL 32073
Tel: 904-541-1655 Fax: 904-541-1657
Email: lloydind1@firedamper.com

B1, 4/F., Luen Ming Hing Factory Building
36 Mok Cheong St.,
To Kwa Wan, Kowloon, H. K.
Tel: 852-2760-4188 Fax: 852-2760-4177
Email: tatanlexyim@lloydasia.com

Website: www.firedamper.com

*ALL STATED SPECIFICATIONS ARE SUBJECT TO UPDATE WITHOUT NOTICE OR OBLIGATION.



Lloyd Industries Inc. 2017

# ROOF CURB ADAPTER

**MODELS:**
**LS-CA (STEEL)**
**LA-CA (ALUMINUM)**

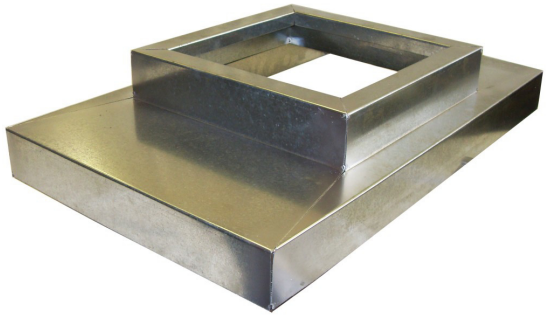

## APPLICATION

The LS-CA/LA-CA are roof curb adapters. The extended base models mount between the fan and roof curb. LS-CA model consists of 16 gauge galvanized steel. LA-CA model consists of 0.063 thick aluminum alloy 3003-H14. Roof curb adapters mount between the fan and the roof curb and provide an additional 6 inches (152 mm) of height.

## STANDARD CONSTRUCTION

Fabricated using 16 Ga. galvanized steel
3 inch rise and 3inch land area
Mill finish is standard

Note: use “D” & “E” dim’s for rectangular Curbs

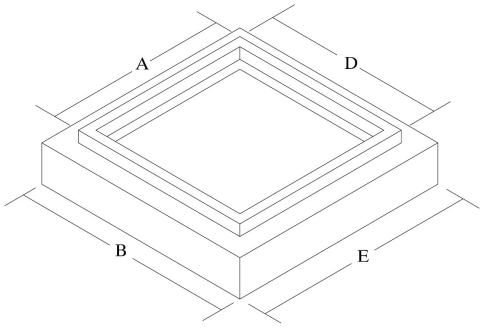


| Side | Minimum Size | Maximum Size |
|---|---|---|
| A | 6” | Contact factory |
| B | 6” | |
| C | 5” | |

**LS-CA**
**STEEL CURB ADAPTER**

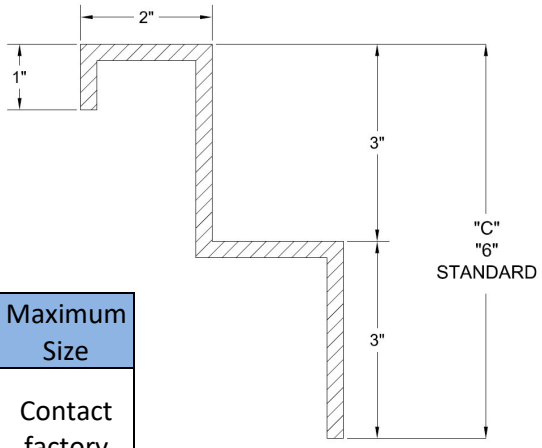


## STANDARD CONSTRUCTION

Fabricated using 0.063 thick aluminum alloy 3003-H14
3 inch rise and 3inch land area
Mill finish is standard
Note: use “D” & “E” dim’s for rectangular Curbs

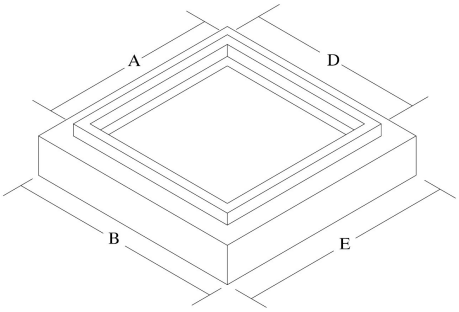


| Side | Minimum Size | Maximum Size |
|---|---|---|
| A | 6” | Contact factory |
| B | 6” | |
| C | 5” | |

**LA-CA**
**ALUMINUM CURB ADAPTER**

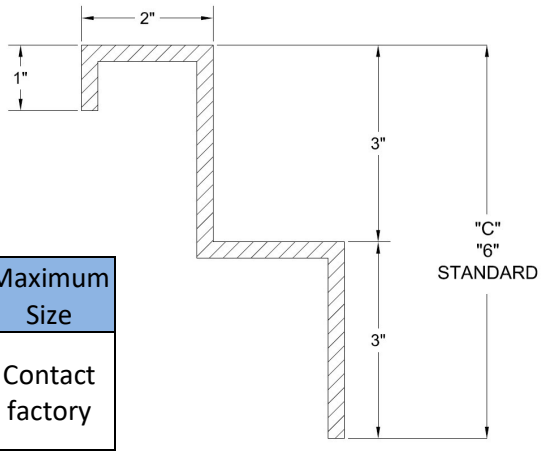


231 Commerce Dr. Montgomeryville, PA 18936
Tel: 215-412-4445 Fax: 215-412-4409
Email: lloydind@firedamper.com

138 Industrial Loop West, Orange Park, FL 32073
Tel: 904-541-1655 Fax: 904-541-1657
Email: lloydind1@firedamper.com

B1, 4/F., Luen Ming Hing Factory Building
36 Mok Cheong St.,
To Kwa Wan, Kowloon, H. K.
Tel: 852-2760-4188 Fax: 852-2760-4177
Email: tatanlexyim@lloydasia.com

Website: www.firedamper.com

*ALL STATED SPECIFICATIONS ARE SUBJECT TO UPDATE WITHOUT NOTICE OR OBLIGATION.



Lloyd Industries Inc. 2017

# SELF FLASHING CURB



**MODELS:**
**LS-SF (STEEL)**
**LA-SF (ALUMINUM)**

## APPLICATION

The LS-SF/LA-SF are self flashing curbs. LS-SF consists of 16 gauge galvanized steel, 3lb. Density 1" thick insulation and 2"x2" nominal wood nailer. The steel insulated curb is 8" high with 1" of insulation. LA-SF consists of aluminum alloy 3003-H-14, 3lb. Density 1" thick insulation and 2"x2" nominal wood nailer. The aluminum insulated curb is 8" high with 1" of insulation.

## STANDARD CONSTRUCTION

Fabricated using 16 Ga. galvanized steel
3lb. Density 1" thick insulation
2"x2" nominal wood nailer
Mill finish is standard
"C" dimension=8in.
Damper tray optional

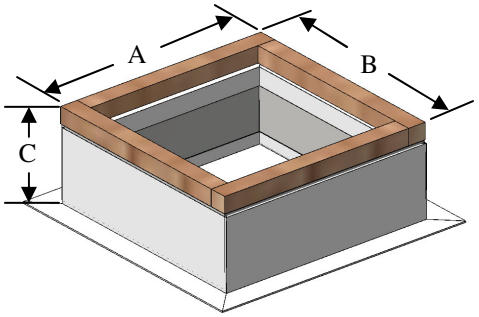


| Side | Minimum Size | Maximum Size |
|---|---|---|
| A | 6" | Contact factory |
| B | 6" | |
| C | 8" | |

**LS-SF**
**Steel Self Flashing Curb**

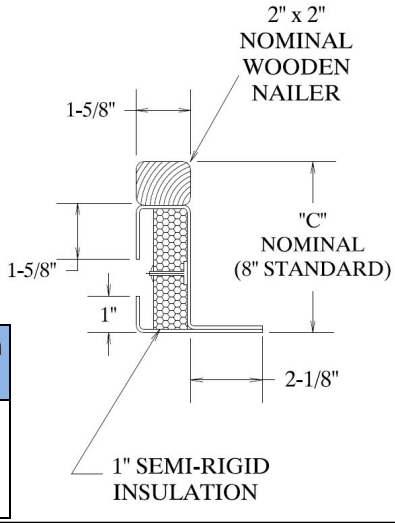


## STANDARD CONSTRUCTION

Fabricated using aluminum alloy 3003-H-14
3lb. Density 1" thick insulation
2"x2" nominal wood nailer
Mill finish is standard
"C" dimension=8in.
Damper tray optional

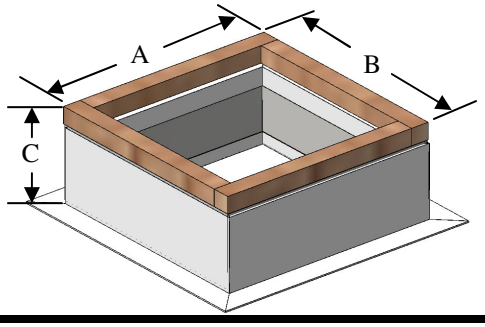


| Side | Minimum Size | Maximum Size |
|---|---|---|
| A | 6" | Contact factory |
| B | 6" | |
| C | 8" | |

**LA-SF**
**Aluminum Self Flashing Curb**

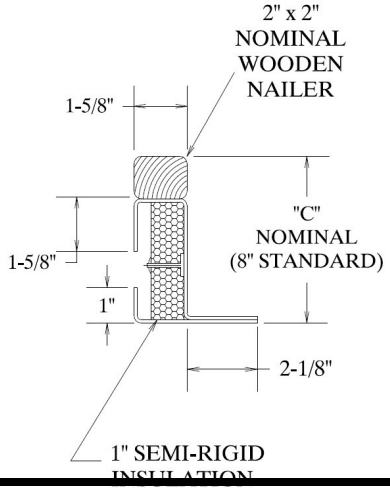


231 Commerce Dr. Montgomeryville, PA 18936
Tel: 215-412-4445 Fax: 215-412-4409
Email: lloydind@firedamper.com

138 Industrial Loop West, Orange Park, FL 32073
Tel: 904-541-1655 Fax: 904-541-1657
Email: lloydind1@firedamper.com

B1, 4/F., Luen Ming Hing Factory Building
36 Mok Cheong St.,
To Kwa Wan, Kowloon, H. K.
Tel: 852-2760-4188 Fax: 852-2760-4177
Email: tatanlexyim@lloydasia.com

Website: www.firedamper.com

*ALL STATED SPECIFICATIONS ARE SUBJECT TO UPDATE WITHOUT NOTICE OR OBLIGATION.



Lloyd Industries Inc. 2017

# CANTED CURB

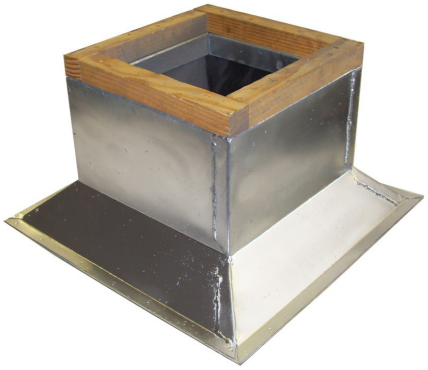

**MODELS:**
**LS-SC (STEEL)**
**LA-SC (ALUMINUM)**

## APPLICATION

The LS-SC/LA-SC are Lloyd's canted curbs. LS-SC consists of 16 gauge galvanized steel, 3lb. Density 1" thick insulation and 2"x2" nominal wood nailer. The steel insulated curb is 8" high with 1" of insulation. LA-SC consists of aluminum alloy 3003-H-14, 3lb. Density 1" thick insulation and 2"x2" nominal wood nailer. The aluminum insulated curb is 8" high with 1" of insulation.

## STANDARD CONSTRUCTION

Fabricated using 16 Ga. galvanized steel
3lb. Density 1" thick insulation
2"x2" nominal wood nailer
Mill finish is standard
"C" dimension=8in. (standard)
Damper tray optional

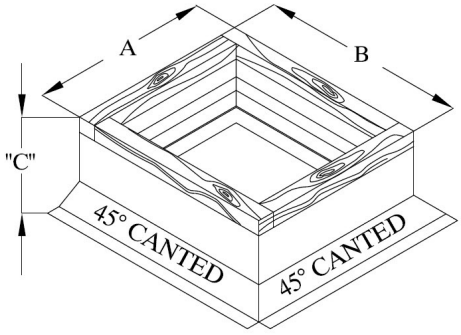


| Side | Minimum Size | Maximum Size |
|---|---|---|
| A | 6" | Contact factory |
| B | 6" | |
| C | 6" | |

**LS-SC**
**STEEL CANTED CURB**

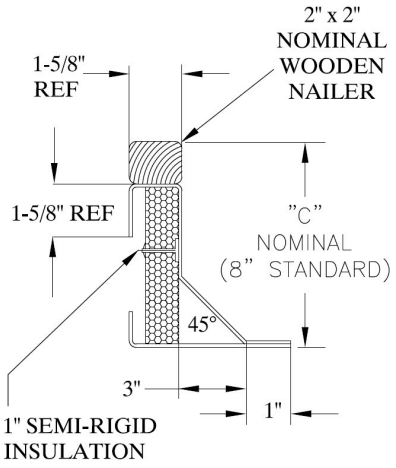


## STANDARD CONSTRUCTION

Fabricated using aluminum alloy 3003-H-14
3lb. Density 1" thick insulation
2"x2" nominal wood nailer
Mill finish is standard
"C" dimension=8in. (standard)
Damper tray optional

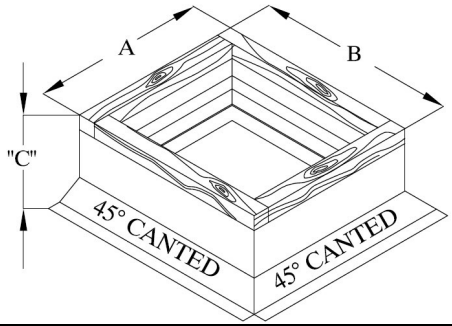


| Side | Minimum Size | Maximum Size |
|---|---|---|
| A | 6" | Contact factory |
| B | 6" | |
| C | 6" | |

**LA-SC**
**ALUMINUM CANTED CURB**

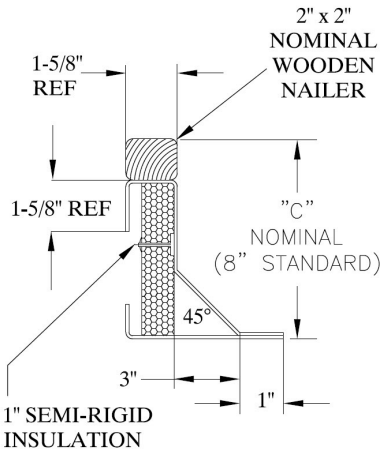


231 Commerce Dr. Montgomeryville, PA 18936
Tel: 215-412-4445 Fax: 215-412-4409
Email: lloydind@firedamper.com

138 Industrial Loop West, Orange Park, FL 32073
Tel: 904-541-1655 Fax: 904-541-1657
Email: lloydind1@firedamper.com

B1, 4/F., Luen Ming Hing Factory Building
36 Mok Cheong St.,
To Kwa Wan, Kowloon, H. K.
Tel: 852-2760-4188 Fax: 852-2760-4177
Email: tatanlexyim@lloydasia.com

Website: www.firedamper.com

*ALL STATED SPECIFICATIONS ARE SUBJECT TO UPDATE WITHOUT NOTICE OR OBLIGATION.



Lloyd Industries Inc. 2017

# PITCHED CURB



**MODELS:**
**LS-SFP (STEEL)**
**LA-SFP (ALUMINUM)**

## APPLICATION

The LS-SFP/LA-SFP are Lloyd's canted curbs. LS-SFP consists of 16 gauge galvanized steel, 3lb. Density 1" thick insulation and 2"x2" nominal wood nailer. The steel insulated curb is 8" high with 1" of insulation. LA-SFP consists of aluminum alloy 3003-H-14, 3lb. Density 1" thick insulation and 2"x2" nominal wood nailer. The aluminum insulated curb is 8" high with 1" of insulation.

## STANDARD CONSTRUCTION

**LS-SFP**
**STEEL PITCHED CURB**

Fabricated using 16 Ga. galvanized steel
4" Flashing Flange
Mill finish is standard
"C" dimension=8in. (standard)
Damper tray optional

| Side | Minimum Size | Maximum Size |
|---|---|---|
| A | 6" | 72" |
| B | 6" | 72" |
| C | 6" | Over 24" contact factory |

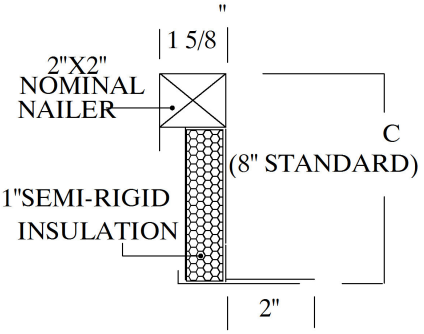


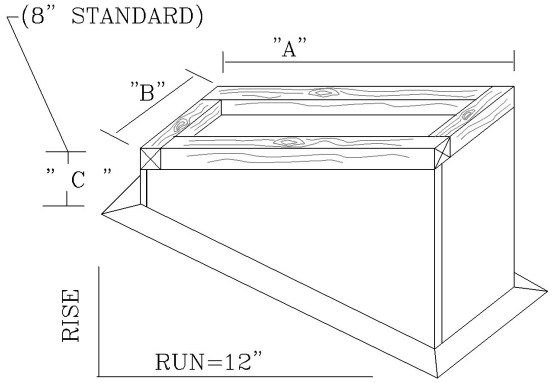


## STANDARD CONSTRUCTION

**LA-SFP**
**ALUMINUM PITCHED CURB**

Fabricated using aluminum alloy 3003-H-14
3lb. Density 1" thick insulation
2"x2" nominal wood nailer
Mill finish is standard
"C" dimension=8in. (standard)
Damper tray optional

| Side | Minimum Size | Maximum Size |
|---|---|---|
| A | 6" | 72" |
| B | 6" | 72" |
| C | 6" | Over 24" contact factory |

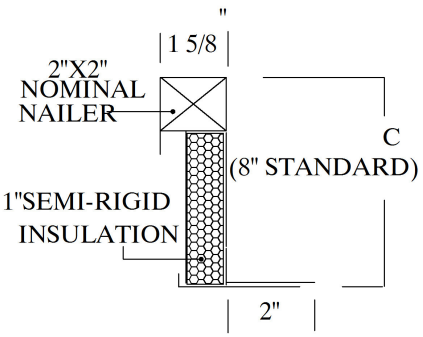


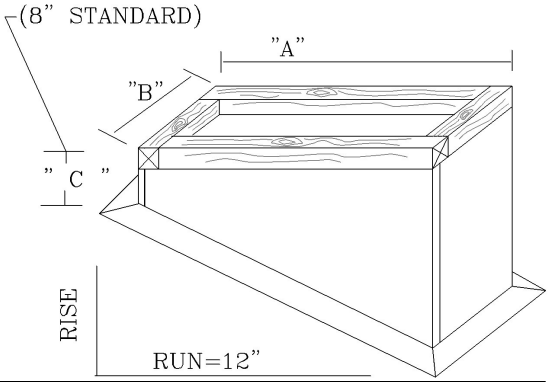


231 Commerce Dr. Montgomeryville, PA 18936
Tel: 215-412-4445 Fax: 215-412-4409
Email: lloydind@firedamper.com

138 Industrial Loop West, Orange Park, FL 32073
Tel: 904-541-1655 Fax: 904-541-1657
Email: lloydind1@firedamper.com

B1, 4/F., Luen Ming Hing Factory Building
36 Mok Cheong St.,
To Kwa Wan, Kowloon, H. K.
Tel: 852-2760-4188 Fax: 852-2760-4177
Email: tatanlexyim@lloydasia.com

Website: www.firedamper.com

*ALL STATED SPECIFICATIONS ARE SUBJECT TO UPDATE WITHOUT NOTICE OR OBLIGATION.



Lloyd Industries Inc. 2017

# EQUIPMENT SUPPORT RAILS



**MODELS:**
**LA-ESF (ALUMINUM SELF FLASHING)**
**LS-ESF (STEEL SELF FLASHING)**

## APPLICATION

The LA-ESF/LS-ESF are Self Flashing Equipment Support Rails. LA -ESF/LS-ESF both consist of a pedestal with continuous wood nailer for the proper attachment of roof flashings, along with a removable cap flashing which offers maximum assurance of a secure, watertight, installation. They provide standardized supports, fabricated from 0.063 Aluminum alloy 3003-H14(LA-ESF)/16 gauge galvanized steel (LS-ESF) with continuous welded corners, designed with the structural integrity to support the majority of all roof-mounted equipment.

### Model: LS-ESF
### STANDARD CONSTRUCTION

Fabricated using 16 gauge galvanized steel
Incorporates straight side walls & 2" flanges
Internal reinforcements at 12" centers
Factory installed wood nailer for equipment
Mounting is mechanically fastened
Mill finish is standard
(optional) Rail cap available

### Model: LA-ESF
### STANDARD CONSTRUCTION

Fabricated using 0.063 Aluminum alloy 3003-H14
Incorporates straight side walls & 2" flanges
Internal reinforcements at 12" centers
Factory installed wood nailer for equipment
Mounting is mechanically fastened
Mill finish is standard
(optional) Rail cap available

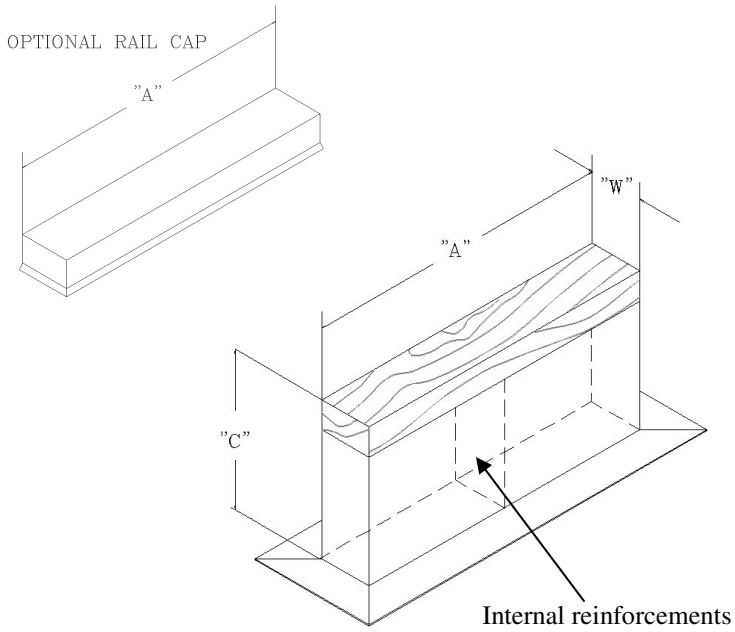


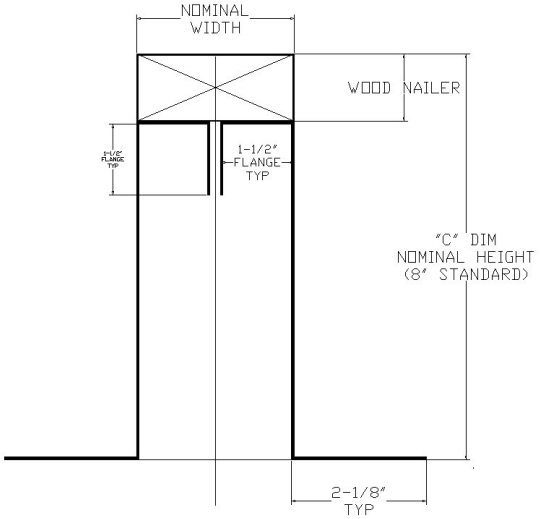


| MODEL SELECTIONS | | |
|---|---|---|
| Models | Nominal wide | Actual nailer width |
| LA-ESF-4/LS-ESF-4 | 4" | 3-1/2" |
| LA-ESF-6/LS-ESF-6 | 6" | 5-1/2" |
| LA-ESF-8/LS-ESF-8 | 8" | 7-1/2" |
| LA-ESF-10/LS-ESF-10 | 10" | 9-1/2" |
| LA-ESF-12/LS-ESF-12 | 12' | 11-1/2" |

231 Commerce Dr. Montgomeryville, PA 18936
Tel: 215-412-4445 Fax: 215-412-4409
Email: lloydind@firedamper.com

138 Industrial Loop West, Orange Park, FL 32073
Tel: 904-541-1655 Fax: 904-541-1657
Email: lloydind1@firedamper.com

B1, 4/F., Luen Ming Hing Factory Building
36 Mok Cheong St.,
To Kwa Wan, Kowloon, H. K.
Tel: 852-2760-4188 Fax: 852-2760-4177
Email: tatanlexyim@lloydasia.com

Website: www.firedamper.com

*ALL STATED SPECIFICATIONS ARE SUBJECT TO UPDATE WITHOUT NOTICE OR OBLIGATION.



Lloyd Industries Inc. 2017

# EQUIPMENT SUPPORT RAILS

**MODELS:**
**LS-ESC (STEEL)**
**LA-ESC (ALUMINUM)**



## APPLICATION

The LS-ESC/LA-ESC are Cant Equipment Support Rails. LA-ESC/ LS-ESC both consist of a pedestal with continuous wood nailer for the proper attachment of roof flashings, along with a removable cap flashing which offers maximum assurance of a secure, watertight, installation. They provide standardized supports, fabricated from 0.063 Aluminum alloy 3003-H14(LA-ESC)/16 gauge galvanized steel (LS-ESC) with continuous welded corners, designed with the structural integrity to support the majority of all roof-mounted equipment.

### Model: LS-ESC
### STANDARD CONSTRUCTION

Fabricated using 16 gauge galvanized steel
Incorporates straight side walls & 2" flanges
Internal reinforcements at 12" centers
Factory installed wood nailer for equipment
Mounting is mechanically fastened
Mill finish is standard
(optional) Rail cap available

### Model: LA-ESC
### STANDARD CONSTRUCTION

Fabricated using 0.063 Aluminum alloy 3003-H14
Incorporates straight side walls & 2" flanges
Internal reinforcements at 12" centers
Factory installed wood nailer for equipment
Mounting is mechanically fastened
Mill finish is standard
(optional) Rail cap available

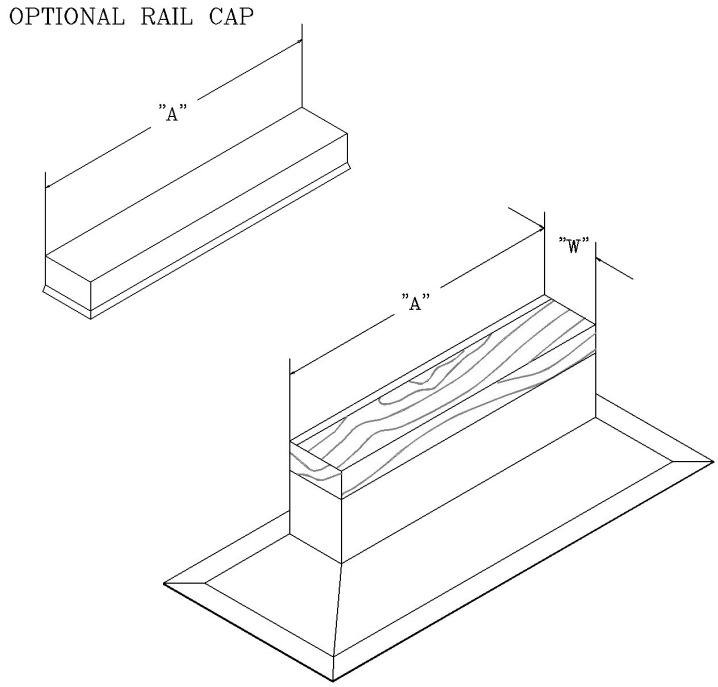


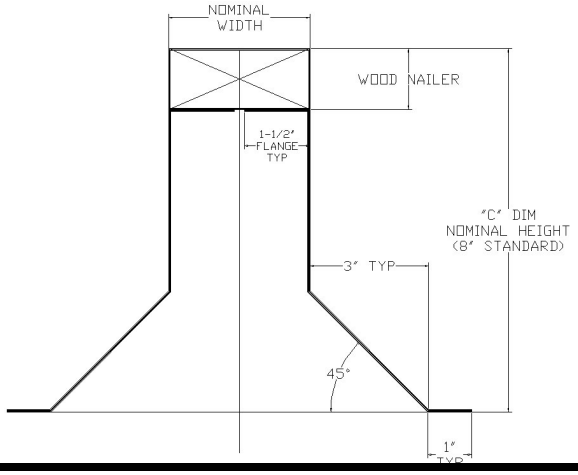


| MODEL SELECTIONS | | |
|---|---|---|
| Models | Nominal wide | Actual nailer width |
| LA-ESC-4/LS-ESC-4 | 4" | 3-1/2" |
| LA-ESC-6/LS-ESC-6 | 6" | 5-1/2" |
| LA-ESC-8/LS-ESC-8 | 8" | 7-1/2" |
| LA-ESC-10/LS-ESC-10 | 10" | 9-1/2" |
| LA-ESC-12/LS-ESC-12 | 12' | 11-1/2" |

231 Commerce Dr. Montgomeryville, PA 18936
Tel: 215-412-4445 Fax: 215-412-4409
Email: lloydind@firedamper.com

138 Industrial Loop West, Orange Park, FL 32073
Tel: 904-541-1655 Fax: 904-541-1657
Email: lloydind1@firedamper.com

B1, 4/F., Luen Ming Hing Factory Building
36 Mok Cheong St.,
To Kwa Wan, Kowloon, H. K.
Tel: 852-2760-4188 Fax: 852-2760-4177
Email: tatanlexyim@lloydasia.com

Website: www.firedamper.com

*ALL STATED SPECIFICATIONS ARE SUBJECT TO UPDATE WITHOUT NOTICE OR OBLIGATION.



Lloyd Industries Inc. 2017

# Rail Supports & Roof Curbs Load Test Result

City Testing & Research Laboratories, Inc.
967 E. HAZELWOOD AVE.
RAHWAY, N.J. 07065
TEL: (732) 388-7711
FAX: (732) 388-5683

## REPORT OF TESTS

Reference No. S-105131A

MATERIAL Rail Supports and Roof Curbs, 16 Gauge

Your Order No. 1608A

FROM Lloyd Industries, Inc.
Montgomeryville, PA 18936

Specification No. None

Sixteen Rail Supports, Models "LS-ESC" and "LS-ESF," along with six Roof Curbs, Models "LS-SC" and "LS-SF," fabricated with 16 gauge galvanized steel were submitted for load testing. A uniform concentrated load was applied to each unit to determine maximum load capacity. The load in pounds per foot was calculated for each unit size. The maximum allowable loads were calculated using a minimum factor of safety of two (2).

### LOAD TEST RESULTS

| Model No. | Size, inch (width x length x height) | Maximum Load, Pounds Actual | Maximum Load, Pounds per foot | Allowable Load, Pounds per Foot |
|---|---|---|---|---|
| LS-ESC | 3.5 x 36 x 8 | 11,200 | 3,730 | 1,800 |
| LS-ESC | 3.5 x 36 x 12 | 12,600 | 4,200 | 2,100 |
| LS-ESC | 3.5 x 36 x 16 | 13,100 | 4,370 | 2,100 |
| LS-ESC | 5.5 x 36 x 8 | 15,600 | 5,200 | 2,600 |
| LS-ESC | 5.5 x 36 x 12 | 14,600 | 4,870 | 2,400 |
| LS-ESC | 5.5 x 36 x 16 | 14,200 | 4,730 | 2,300 |
| LS-ESF | 3.5 x 36 x 8 | 35,100 | 11,700 | 5,800 |
| LS-ESF | 3.5 x 36 x 12 | 33,300 | 11,100 | 5,500 |
| LS-ESF | 3.5 x 36 x 16 | 27,700 | 9,230 | 4,600 |
| LS-ESF | 5.5 x 36 x 8 | 39,200 | 13,100 | 6,500 |
| LS-ESF | 5.5 x 36 x 12 | 38,500 | 12,800 | 6,400 |
| LS-ESF | 5.5 x 36 x 16 | 35,100 | 11,700 | 5,800 |
| LS-SC | 16 x 16 x 8 | 13,700 | 2,580 | 1,200 |
| LS-SC | 16 x 16 x 12 | 13,400 | 2,530 | 1,200 |
| LS-SC | 16 x 16 x 16 | 13,400 | 2,530 | 1,200 |
| LS-SF | 16 x 16 x 8 | 16,500 | 3,110 | 1,500 |
| LS-SF | 16 x 16 x 12 | 19,300 | 3,640 | 1,800 |
| LS-SF | 16 x 16 x 16 | 16,400 | 3,090 | 1,500 |

REMARKS

There are no requirements specified. The results are submitted for further evaluation.

We certify that this report is a true report of results obtained from our tests of this material

By H. Goldenberg, P. E. Date Dec. 31, 2002 Witnessed by

Asst. Technical Director

# INSTALLATION INSTRUCTIONS

231 Commerce Dr. Montgomeryville, PA 18936
Tel: 215-412-4445 Fax: 215-412-4409
Email: lloydind@firedamper.com

138 Industrial Loop West, Orange Park, FL 32073
Tel: 904-541-1655 Fax: 904-541-1657
Email: lloydind1@firedamper.com

B1, 4/F., Luen Ming Hing Factory Building
36 Mok Cheong St.,
To Kwa Wan, Kowloon, H. K.
Tel: 852-2760-4188 Fax: 852-2760-4177
Email: tatanlexyim@lloydasia.com

Website: www.firedamper.com

*ALL STATED SPECIFICATIONS ARE SUBJECT TO UPDATE WITHOUT NOTICE OR OBLIGATION.

Lloyd Industries Inc. 2017

# INSTALLATION INSTRUCTIONS

FIRE/SMOKE DAMPER
VERTICAL OR HORIZONTAL MOUNT 1-1/2HR RATING
(Bi-Directional)
(For use in 2hour or less rated partitions)

## 1-1/2 HOUR FIRE/SMOKE DAMPER

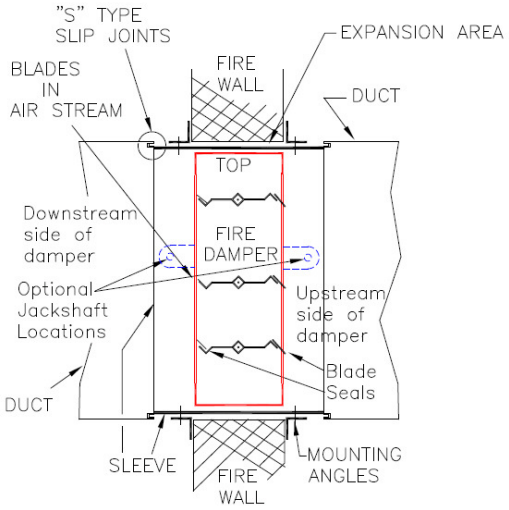

VERTICAL INSTALLATION

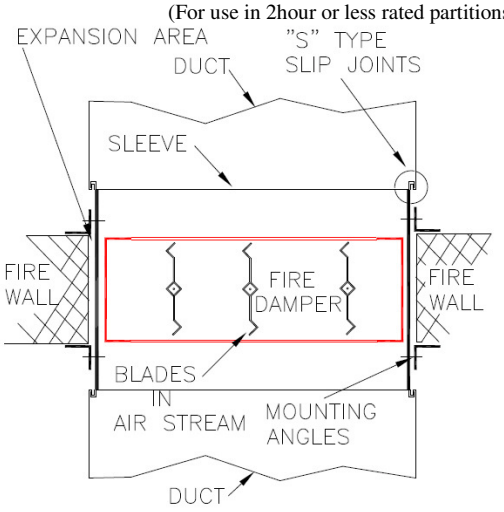

HORIZONTAL INSTALLATION

FUSIBLE LINKS
165°F is standard.
Located in pin grooves.

| Single Section | | Multiple Section |
|---|---|---|
| Minimum Size (WxH) | Maximum Size (WxH) | Maximum Size (WxH) |
| | 36"x36" | 72"x72" (vertical) |
| | 30"x36" | 120"x72" (vertical) |
| 8"x8" | 32"x36" | 96"x72" (Horizontal) |

Damper shall be fastened to sleeve with No.10 or No.8 x 3/4" sheet metal screws on 6" centers (max). No further than 2" from either end. See notes 2 and 3 regarding duct connections.
Angles shall be a minimum of 1-1/2" x 1-1/2" x 1/16" and fastened to the sleeve and damper only. Must be fastened on all (4) sides with 1/4" bolts, 1/2" long welds or No.10 or No.8 sheet metal screws on 8" maximum centers. (See Note #4 for expansion clearance and overlap.)
Angles shall not be fastened to each other at the corners or fastened to the fire wall.
Angles may be reversed when diffusers or grills require flush mounting.
Installation per NFPA90A, UL555 and SMACNA Fire Smoke and Radiation Installation Guide.

**FASTENERS MUST BE PLACED WHERE THEY DO NOT INTERFERE WITH DAMPER OPERATION**

Notes:
1. Sleeves shall be of the same gauge or heavier then the duct to which it is attached. Gauges shall conform to SMACNA or ASHRAE standards.
2. When the follow sleeve connections are used, the minimum gauge of the sleeve shall be 16Ga on dampers not exceeding 36"W x 24"H and 14Ga on larger dampers.
   a. Angle reinforced standing seam. b. Angle reinforced pocket lock.
   c. Companion angles. d. Metal fasteners approximately 16" on centers.
3. The following breakaway sleeve connections may be used on all systems:
   a. Plain "S" Slip b. Hemmed "S" Slip c. Bar Slip d. Standing "S" Slip
   e. Reinforced Bar Slip f. Angle Slip g. Inside Slip Joint h. Double "S" Slip
4. Clearance for expansion of 1/8" per foot of sleeve dimension is required. Angles should lap masonry a minimum of 1" around the entire opening.
5. Maximum sleeve extension from the wall or floor opening is 6" on the damper side without actuator.
   Maximum sleeve extension from the wall or floor opening is 16" on the damper side with actuator.
6. Dampers may be installed in wall or partition (masonry, gypsum wallboard) or concrete floor.
7. The connection ducts shall not be continuous, but shall terminate at the sleeve or frame.
8. Dampers are supplied with factory mounted actuators designed to close automatically upon loss of power.
9. The jackshaft side of the damper may be installed either "upstream" or "downstream".
10. A continuous bead of Dow Corning RTV-732, Dow Corning 999A, GE-1200 Silicone Rubber Sealant (or approved equal) shall be applied between the damper and the sleeve for its entire profile on one side of the installation as a minimum.
11. Installed damper units require operational checks upon completion to ensure proper functioning.
12. An access door is a NFPA requirement for damper inspection and testing.
13. For use in static and dynamic systems up to the maximum rated temperature, velocity and water gauge.
14. Electric actuator connections shall conform to the National Electric Code.
15. Pneumatic actuators require metallic airline connections, and a minimum of 20PSI supply air. (Not to exceed 30PSI)
16. **CAUTION: THE HEAVY DAMPER CLOSURE SPRING IS UNDER LOAD.**

231 Commerce Dr. Montgomeryville, PA 18936
Tel: 215-412-4445 Fax: 215-412-4409
Email: lloydind@firedamper.com

138 Industrial Loop West, Orange Park, FL 32073
Tel: 904-541-1655 Fax: 904-541-1657
Email: lloydind1@firedamper.com

B1, 4/F., Luen Ming Hing Factory Building
36 Mok Cheong St.,
To Kwa Wan, Kowloon, H. K.
Tel: 852-2760-4188 Fax: 852-2760-4177
Email: tatanlexyim@lloydasia.com

Website: www.firedamper.com

*ALL STATED SPECIFICATIONS ARE SUBJECT TO UPDATE WITHOUT NOTICE OR OBLIGATION.



Lloyd Industries Inc. 2017

# INSTALLATION INSTRUCTIONS

## 3 HOUR FIRE/SMOKE DAMPER

MULTIPLE SECTION DAMPER
VERTICAL MOUNT **3HR RATING**

(For use in 4 Hour or less rated partitions)

| MAXIMUM MULTIPLE SECTION SINGLE UNITS IN INCHES | |
|---|---|
| Width | Height |
| 72 | 72 |

FUSIBLE LINKS
Temperature rating is not to exceed 250°F. 165°F is standard. Located in pin grooves.

| MAXIMUM SINGLE SECTION SINGLE UNITS IN INCHES | | |
|---|---|---|
| | Width | Height |
| Vertical/ Horizontal | 36 | 36 |
| Vertical | 30 | 48 |

*Each single section damper shall be supplied with an independent motor operator.

Damper shall be fastened to sleeve with No.10 or No.8 x 3/4" sheet metal screws on 6" centers (max). No further than 2" from either end.
See notes 2 and 3 regarding duct connections.
Angles shall be a minimum of 1-1/2" x 1-1/2" x 1/16" and fastened to the sleeve and damper only. Must be fastened on all (4) sides with 1/4" bolts, 1/2" long welds or No.10 or No.8 sheet metal screws on 8" maximum centers. (See Note #4 for expansion clearance and overlap.)
Angles shall not be fastened to each other at the corners or fastened to the fire wall.
Angles may be reversed when diffusers or grills require flush mounting.
Installation per NFPA90A, UL555 and SMACNA Fire Smoke and Radiation Installation Guide.

**FASTENERS MUST BE PLACED WHERE THEY DO NOT INTERFERE WITH DAMPER OPERATION**

Notes:
1. Sleeves shall be 16 gauge or heavier then the duct to which it is attached. Gauges shall conform to SMACNA or ASHRAE standards.
2. When the follow sleeve connections are used, the minimum gauge of the sleeve shall 14 gauge.
   a. Angle reinforced standing seam.
   b. Angle reinforced pocket lock.
   c. Companion angles.
   d. Metal fasteners approximately 16" on centers.
3. The following breakaway sleeve connections may be used on all systems:
   a. Plain "S" Slip
   b. Hemmed "S" Slip
   c. Bar Slip
   d. Standing "S" Slip
   e. Reinforced Bar Slip
   f. Angle Slip
   g. Inside Slip Joint
   h. Double "S" Slip
4. Clearance for expansion of 1/8" per foot of sleeve dimension is required. Angles should lap masonry a minimum of 1" around the entire opening.
5. For multiple section damper assemblies larger then 72" x 72", refer to the mullion installation instruction sheet for fire dampers.
6. Maximum sleeve extension from the wall or floor opening is 6" on the damper side without actuator.
   Maximum sleeve extension from the wall or floor opening is 16" on the damper side with actuator.
7. Dampers may be installed in wall or partition (masonry, gypsum wallboard) or concrete floor.
8. The connection ducts shall not be continuous, but shall terminate at the sleeve or frame.
9. Dampers are supplied with factory mounted actuators designed to close automatically upon loss of power.
10. The jackshaft side of the damper may be installed either "upstream" or "downstream".
11. A continuous bead of Dow Corning RTV-732, Dow Corning 999A, GE-1200 Silicone Rubber Sealant (or approved equal) shall be applied between the damper and the sleeve for its entire profile on one side of the installation as a minimum.
12. Installed damper units require operational checks upon completion to ensure proper functioning.
13. An access door is a NFPA requirement for damper inspection and testing.
14. For use in static and dynamic systems up to the maximum rated temperature, velocity and water gauge.
15. Electric actuator connections shall conform to the National Electric Code.
16. Pneumatic actuators require metallic airline connections, and a minimum of 20PSI supply air. (Not to exceed 30PSI)
17. **CAUTION: THE HEAVY DAMPER CLOSURE SPRING IS UNDER LOAD.**

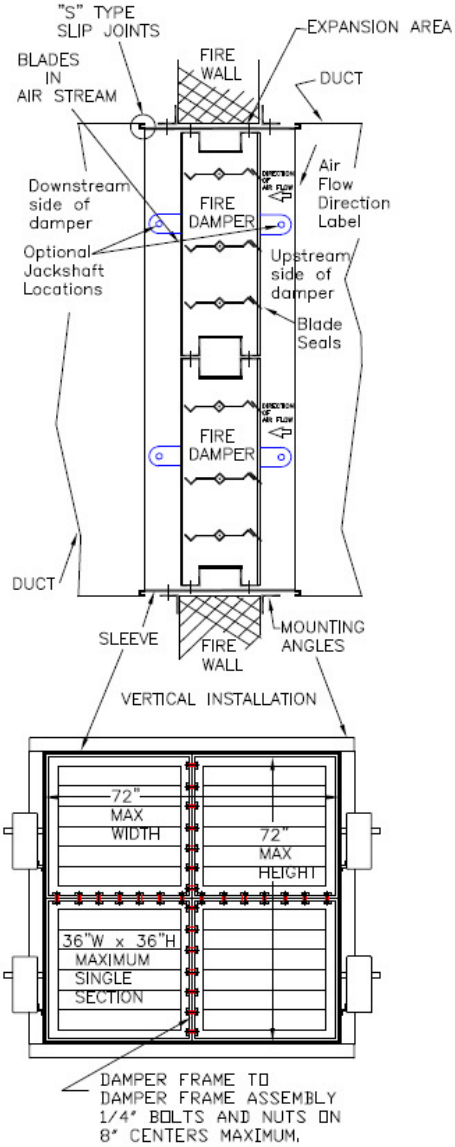


231 Commerce Dr. Montgomeryville, PA 18936
Tel: 215-412-4445 Fax: 215-412-4409
Email: lloydind@firedamper.com

138 Industrial Loop West, Orange Park, FL 32073
Tel: 904-541-1655 Fax: 904-541-1657
Email: lloydind1@firedamper.com

B1, 4/F., Luen Ming Hing Factory Building
36 Mok Cheong St.,
To Kwa Wan, Kowloon, H. K.
Tel: 852-2760-4188 Fax: 852-2760-4177
Email: tatanlexyim@lloydasia.com

Website: www.firedamper.com

*ALL STATED SPECIFICATIONS ARE SUBJECT TO UPDATE WITHOUT NOTICE OR OBLIGATION.



Lloyd Industries Inc. 2017

# INSTALLATION INSTRUCTIONS

## FIRE/SMOKE DAMPER

Damper shall be fastened to sleeve with No.10 or No.8 x 3/4" sheet metal screws on 6" centers (max). No further than 2" from either end.
See notes 2 and 3 regarding duct connections.
Angles shall be a minimum of 1-1/2" x 1-1/2" x 1/16" and fastened to the sleeve and damper only. Must be fastened on all (4) sides with 1/4" bolts, 1/2" long welds or No.10 or No.8 sheet metal screws on 8" maximum centers. (See Note #4 for expansion clearance and overlap.)
Angles shall not be fastened to each other at the corners or fastened to the fire wall.
Angles may be reversed when diffusers or grills require flush mounting.
Installation per NFPA90A, UL555 and SMACNA Fire Smoke and Radiation Installation Guide.

**FASTENERS MUST BE PLACED WHERE THEY DO NOT INTERFERE WITH DAMPER OPERATION**

Notes:
1. Sleeves shall be 16 gauge or heavier then the duct to which it is attached. Gauges shall conform to SMACNA or ASHRAE standards.
2. When the follow sleeve connections are used, the minimum gauge of the sleeve shall 14 gauge.
   a. Angle reinforced standing seam.
   b. Angle reinforced pocket lock.
   c. Companion angles.
   d. Metal fasteners approximately 16" on centers.
3. The following breakaway sleeve connections may be used on all systems:
   a. Plain "S" Slip
   b. Hemmed "S" Slip
   c. Bar Slip
   d. Standing "S" Slip
   e. Reinforced Bar Slip
   f. Angle Slip
   g. Inside Slip Joint
   h. Double "S" Slip
4. Clearance for expansion of 1/8" per foot of sleeve dimension is required. Angles should lap masonry a minimum of 1" around the entire opening.
5. For multiple section damper assemblies larger then 72" x 72", refer to the mullion installation instruction sheet for fire dampers.
6. Maximum sleeve extension from the wall or floor opening is 6" on the damper side without actuator.
   Maximum sleeve extension from the wall or floor opening is 16" on the damper side with actuator.
7. Dampers may be installed in wall or partition (masonry, gypsum wallboard) or concrete floor.
8. The connection ducts shall not be continuous, but shall terminate at the sleeve or frame.
9. Dampers are supplied with factory mounted actuators designed to close automatically upon loss of power.
10. The jackshaft side of the damper may be installed either "upstream" or "downstream".
11. A continuous bead of Dow Corning RTV-732, Dow Corning 999A, GE-1200 Silicone Rubber Sealant (or approved equal) shall be applied between the damper and the sleeve for its entire profile on one side of the installation as a minimum.
12. Installed damper units require operational checks upon completion to ensure proper functioning.
13. An access door is a NFPA requirement for damper inspection and testing.
14. For use in static and dynamic systems up to the maximum rated temperature, velocity and water gauge.
15. Electric actuator connections shall conform to the National Electric Code.
16. Pneumatic actuators require metallic airline connections, and a minimum of 20PSI supply air. (Not to exceed 30PSI)
**17. CAUTION: THE HEAVY DAMPER CLOSURE SPRING IS UNDER LOAD.**

FUSIBLE LINKS
Temperature rating is not to exceed 250°F.
165°F is standard.
Located in pin grooves.

MULTIPLE SECTION DAMPER
VERTICAL MOUNT 1-1/2HR RATING

| Single Section | | Multiple Section |
|---|---|---|
| Minimum Size (WxH) | Maximum Size (WxH) | Maximum Size (WxH) |
| | 36"x36" | 72"x72" (vertical) |
| | 30"x36" | 120"x72" (vertical) |
| 8"x8" | 32"x36" | 96"x72" (Horizontal) |

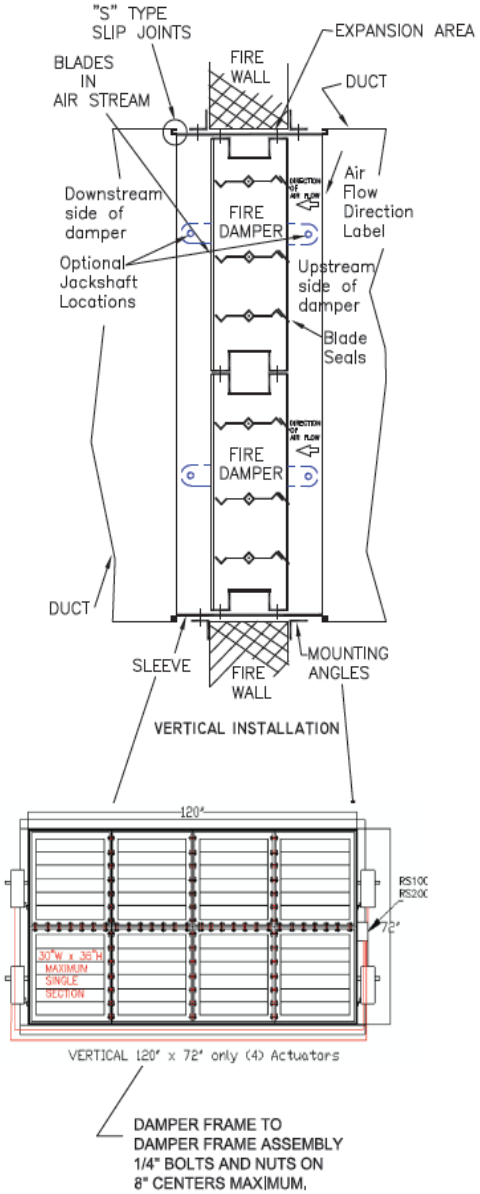


231 Commerce Dr. Montgomeryville, PA 18936
Tel: 215-412-4445 Fax: 215-412-4409
Email: lloydind@firedamper.com

138 Industrial Loop West, Orange Park, FL 32073
Tel: 904-541-1655 Fax: 904-541-1657
Email: lloydind1@firedamper.com

B1, 4/F., Luen Ming Hing Factory Building
36 Mok Cheong St.,
To Kwa Wan, Kowloon, H. K.
Tel: 852-2760-4188 Fax: 852-2760-4177
Email: tatanlexyim@lloydasia.com

Website: www.firedamper.com

*ALL STATED SPECIFICATIONS ARE SUBJECT TO UPDATE WITHOUT NOTICE OR OBLIGATION.



Lloyd Industries Inc. 2017

# LLOYD INDUSTRIES INC.

WWW.FIREDAMPER.COM

## INSTALLATION INSTRUCTIONS

**3HOUR FIRE/SMOKE DAMPER**

MULTIPLE SECTION DAMPER
VERTICAL or HORIZONTAL MOUNT **3HR RATING**

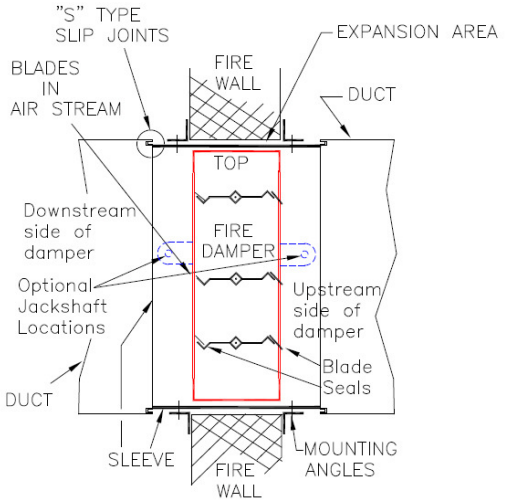


VERTICAL INSTALLATION

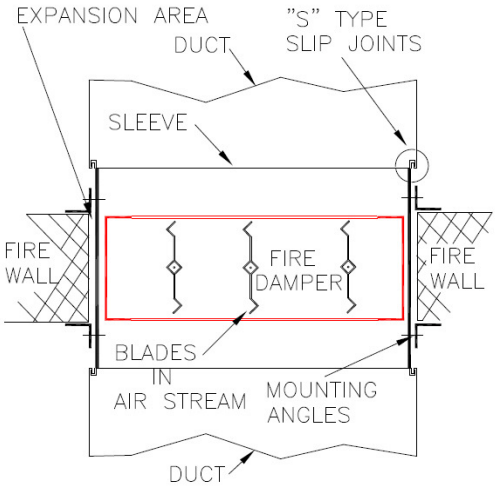


HORIZONTAL INSTALLATION

| MAXIMUM MULTIPLE SECTION SINGLE UNITS IN INCHES | |
|---|---|
| Width | Height |
| 72 | 72 |

| MAXIMUM SINGLE SECTION (MODEL:FSDL-111) SINGLE UNITS IN INCHES | | |
|---|---|---|
| | Width | Height |
| Vertical/ Horizontal | 36 | 36 |
| Vertical | 30 | 48 |

*Each single section damper shall be supplied with an independent motor operator.

FUSIBLE LINKS
Temperature rating is not to exceed 250°F. 165°F is standard. Located in pin grooves.

Damper shall be fastened to sleeve with No.10 or No.8 x 3/4" sheet metal screws on 6" centers (max). No further than 2" from either end. See notes 2 and 3 regarding duct connections.
Angles shall be a minimum of 1-1/2" x 1-1/2" x 1/16" and fastened to the sleeve and damper only. Must be fastened on all (4) sides with 1/4" bolts, 1/2" long welds or No.10 or No.8 sheet metal screws on 8" maximum centers. (See Note #4 for expansion clearance and overlap.)
Angles shall not be fastened to each other at the corners or fastened to the fire wall.
Angles may be reversed when diffusers or grills require flush mounting.
Installation per NFPA90A, UL555 and SMACNA Fire Smoke and Radiation Installation Guide.

**FASTENERS MUST BE PLACED WHERE THEY DO NOT INTERFERE WITH DAMPER OPERATION**

Notes:
1. Sleeves shall be of the same gauge or heavier then the duct to which it is attached. Gauges shall conform to SMACNA or ASHRAE standards.
2. When the follow sleeve connections are used, the minimum gauge of the sleeve shall be 16Ga on dampers not exceeding 36"W x 24"H and 14Ga on larger dampers.
   a. Angle reinforced standing seam. b. Angle reinforced pocket lock.
   c. Companion angles. d. Metal fasteners approximately 16" on centers.
3. The following breakaway sleeve connections may be used on all systems:
   a. Plain "S" Slip b. Hemmed "S" Slip c. Bar Slip d. Standing "S" Slip
   e. Reinforced Bar Slip f. Angle Slip g. Inside Slip Joint h. Double "S" Slip
4. Clearance for expansion of 1/8" per foot of sleeve dimension is required. Angles should lap masonry a minimum of 1" around the entire opening.
5. Maximum sleeve extension from the wall or floor opening is 6" on the damper side without actuator.
   Maximum sleeve extension from the wall or floor opening is 16" on the damper side with actuator.
6. Dampers may be installed in wall or partition (masonry, gypsum wallboard) or concrete floor.
7. The connection ducts shall not be continuous, but shall terminate at the sleeve or frame.
8. Dampers are supplied with factory mounted actuators designed to close automatically upon loss of power.
9. The jackshaft side of the damper may be installed either "upstream" or "downstream".
10. A continuous bead of Dow Corning RTV-732, Dow Corning 999A, GE-1200 Silicone Rubber Sealant (or approved equal) shall be applied between the damper and the sleeve for its entire profile on one side of the installation as a minimum.
11. Installed damper units require operational checks upon completion to ensure proper functioning.
12. An access door is a NFPA requirement for damper inspection and testing.
13. For use in static and dynamic systems up to the maximum rated temperature, velocity and water gauge.
14. Electric actuator connections shall conform to the National Electric Code.
15. Pneumatic actuators require metallic airline connections, and a minimum of 20PSI supply air. (Not to exceed 30PSI)
16. **CAUTION: THE HEAVY DAMPER CLOSURE SPRING IS UNDER LOAD.**


231 Commerce Dr. Montgomeryville, PA 18936
Tel: 215-412-4445 Fax: 215-412-4409
Email: lloydind@firedamper.com

138 Industrial Loop West, Orange Park, FL 32073
Tel: 904-541-1655 Fax: 904-541-1657
Email: lloydind1@firedamper.com

B1, 4/F., Luen Ming Hing Factory Building
36 Mok Cheong St.,
To Kwa Wan, Kowloon, H. K.
Tel: 852-2760-4188 Fax: 852-2760-4177
Email: tatanlexyim@lloydasia.com

Website: www.firedamper.com



*ALL STATED SPECIFICATIONS ARE SUBJECT TO UPDATE WITHOUT NOTICE OR OBLIGATION.





Lloyd Industries Inc. 2017

# INSTALLATION INSTRUCTIONS

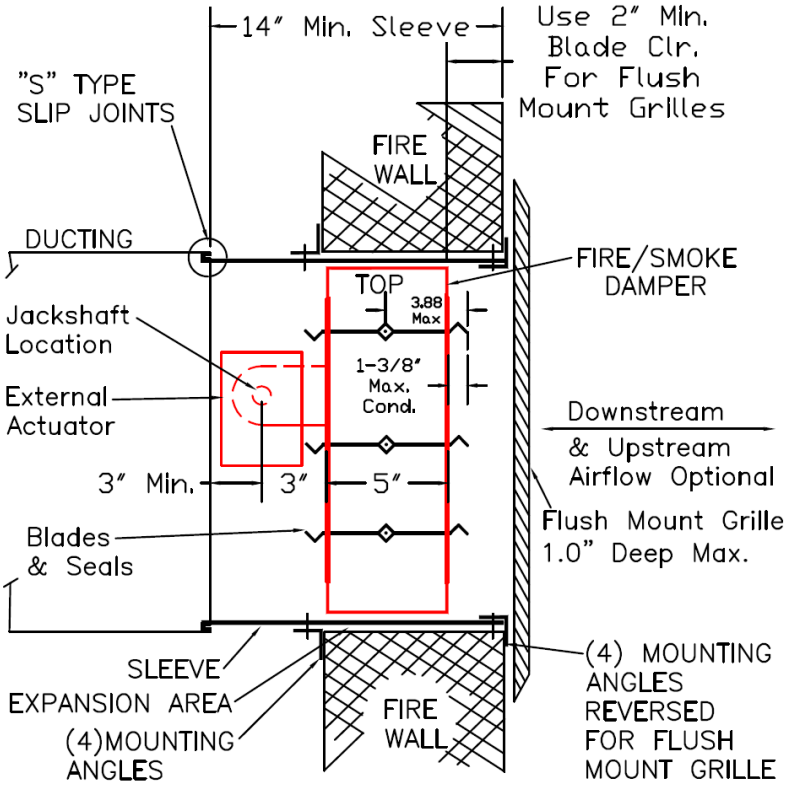


**FIRE/ SMOKE DAMPER**

**Vertical & Horizontal installation with flush mount grille.**

Note:
Installation fasteners must not interfere with damper operation and sealing.

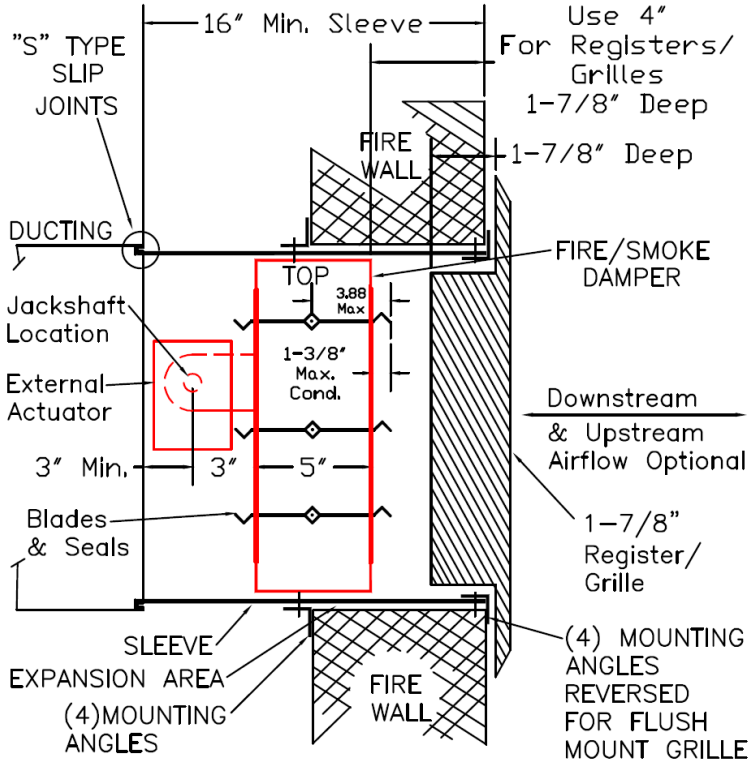


**FIRE/ SMOKE DAMPER-EXTERNAL MOUNT MOTORS**

**Minimum sleeve for vertical & horizontal installation with up to 1-7/8" deep registers/grills**

Note:
Installation fasteners must not interfere with damper operation and sealing.

231 Commerce Dr. Montgomeryville, PA 18936
Tel: 215-412-4445 Fax: 215-412-4409
Email: lloydind@firedamper.com

138 Industrial Loop West, Orange Park, FL 32073
Tel: 904-541-1655 Fax: 904-541-1657
Email: lloydind1@firedamper.com

B1, 4/F., Luen Ming Hing Factory Building
36 Mok Cheong St.,
To Kwa Wan, Kowloon, H. K.
Tel: 852-2760-4188 Fax: 852-2760-4177
Email: tatanlexyim@lloydasia.com

Website: www.firedamper.com

*ALL STATED SPECIFICATIONS ARE SUBJECT TO UPDATE WITHOUT NOTICE OR OBLIGATION.



Lloyd Industries Inc. 2017

# INSTALLATION INSTRUCTIONS

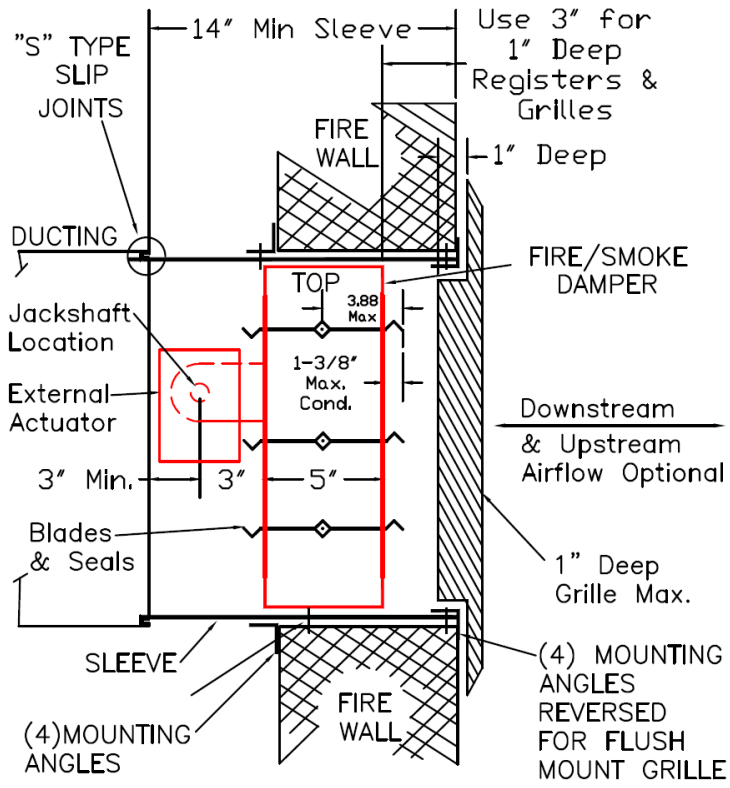


**FIRE/ SMOKE DAMPER**
**FSD-111-1-PB**
**FSD-111-2-PB**
**FSD-111-3-PB**

**Minimum sleeve for vertical & horizontal installation with up to 1' deep registers/ grilles**

Note:
Installation fasteners must not interfere with damper operation and sealing.

---

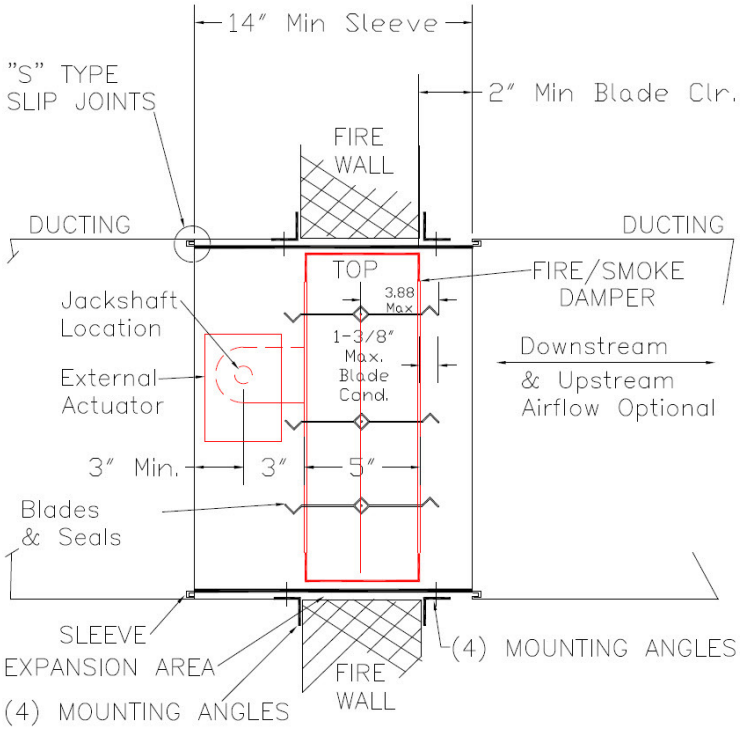


**FIRE/ SMOKE DAMPER**

**Minimum sleeve for vertical & horizontal installation with standard ducting both sides**

Note:
Installation fasteners must not interfere with damper operation and sealing.

231 Commerce Dr. Montgomeryville, PA 18936
Tel: 215-412-4445 Fax: 215-412-4409
Email: lloydind@firedamper.com

138 Industrial Loop West, Orange Park, FL 32073
Tel: 904-541-1655 Fax: 904-541-1657
Email: lloydind1@firedamper.com

B1, 4/F., Luen Ming Hing Factory Building
36 Mok Cheong St.,
To Kwa Wan, Kowloon, H. K.
Tel: 852-2760-4188 Fax: 852-2760-4177
Email: tatanlexyim@lloydasia.com

Website: www.firedamper.com

*ALL STATED SPECIFICATIONS ARE SUBJECT TO UPDATE WITHOUT NOTICE OR OBLIGATION.



Lloyd Industries Inc. 2017

# SMOKE DAMPER INSTALLATION INSTRUCTIONS

**MODELS:**
**SD-333-1-PB**
**SD-333-2-PB**
**SD-333-3-PB**

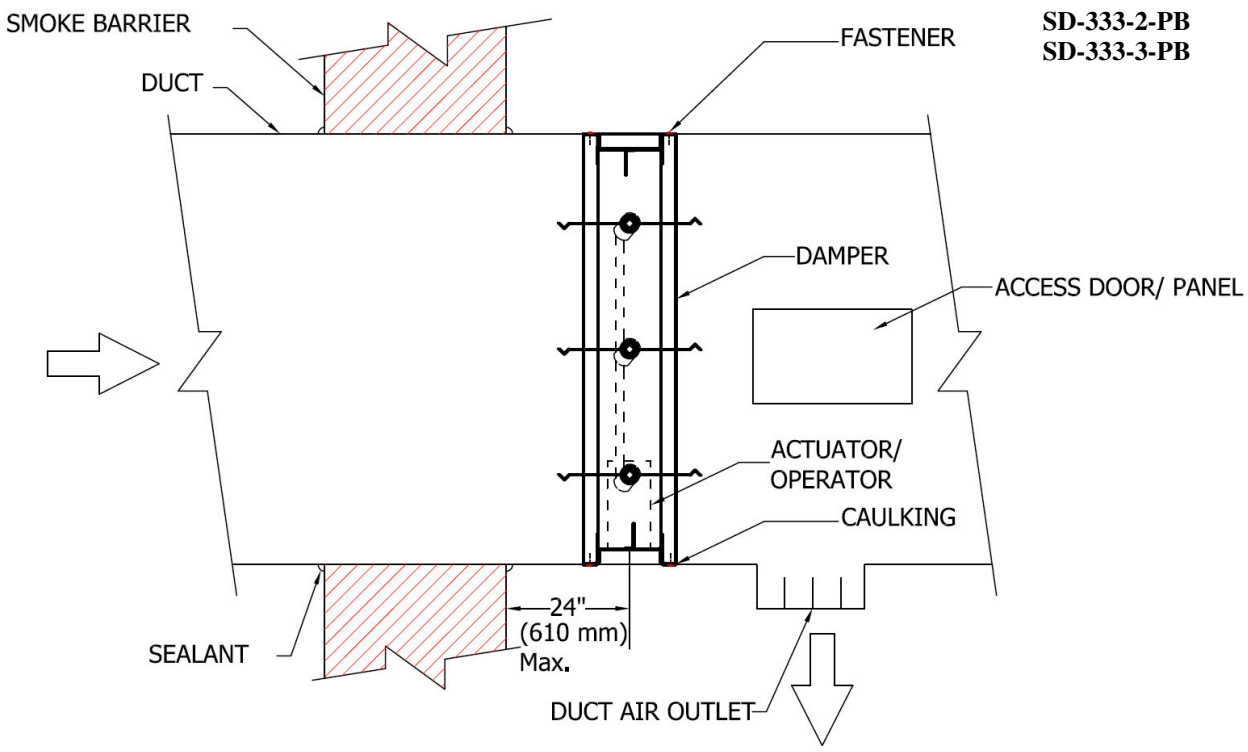


**Figure 1: Smoke damper installation**

## LOCATION OF SMOKE DAMPER

- Smoke dampers must be installed at or adjacent to the point where the duct passes through the smoke barrier as shown in Figure 1.
- The maximum installation distance is 24 in. (610 mm) from the smoke barrier.
- Duct air outlets or inlets shall not be located between the smoke damper and the smoke barrier.

## FASTERNERS CAN BE USED

- #10 sheet metal screws, 1/4 in. ( 6 mm) diameter bolts and nuts
- tack or spot welds
- 3/16 in. ( 5 mm) diameter steel pop rivets

## SEALING THE INSTALLATION

Dow Corning RTV 732 sealant is used to seal the joint between the damper frame and duct after the damper is installed in the ductwork. Sealant must be pressed into the joint to ensure a proper seal.

Note: Sleeves/ retaining angles are not required.

231 Commerce Dr. Montgomeryville, PA 18936
Tel: 215-412-4445 Fax: 215-412-4409
Email: lloydind@firedamper.com

138 Industrial Loop West, Orange Park, FL 32073
Tel: 904-541-1655 Fax: 904-541-1657
Email: lloydind1@firedamper.com

B1, 4/F., Luen Ming Hing Factory Building
36 Mok Cheong St.,
To Kwa Wan, Kowloon, H. K.
Tel: 852-2760-4188 Fax: 852-2760-4177
Email: tatanlexyim@lloydasia.com

Website: www.firedamper.com

*ALL STATED SPECIFICATIONS ARE SUBJECT TO UPDATE WITHOUT NOTICE OR OBLIGATION.



Lloyd Industries Inc. 2017

# INSTALLATION INSTRUCTIONS

HORIZONTAL MOUNT 1HR RATED DAMPER

**CORRIDOR FIRE/SMOKE DAMPER**

Damper shall be fastened to sleeve with No.10 or No.8 x 3/4" sheet metal screws on 6" centers (max). No further than 2" from either end.
See notes 2 and 3 regarding duct connections.
Angles shall be a minimum of 1-1/2" x 1-1/2" x 1/16" and fastened to the sleeve and damper only. Must be fastened on all (4) sides with 1/4" bolts, 1/2" long welds or No.10 or No.8 sheet metal screws on 8" maximum centers. (See Note #4 for expansion clearance and overlap.)
Angles shall not be fastened to each other at the corners or fastened to the fire wall.
Angles may be reversed when diffusers or grills require flush mounting.
Installation per NFPA90A, UL555 and SMACNA Fire Smoke and Radiation Installation Guide.

**FASTENERS MUST BE PLACED WHERE THEY DO NOT INTERFERE WITH DAMPER OPERATION**

Notes:
1. Sleeves shall be the same gauge or heavier then the duct to which it is attached. Gauges shall conform to SMACNA or ASHRAE standards.
2. When the follow sleeve connections are used, the minimum gauge of the sleeve shall be 16Ga on dampers not exceeding 24"W x 24"H .
   a. Angle reinforced standing seam. b. Angle reinforced pocket lock.
   c. Companion angles. d. Metal fasteners approximately 16" on centers.
3. The following breakaway sleeve connections may be used on all systems:
   a. Plain "S" Slip b. Hemmed "S" Slip c. Bar Slip d. Standing "S" Slip
   e. Reinforced Bar Slip f. Angle Slip g. Inside Slip Joint h. Double "S" Slip
4. Clearance for expansion of 1/8" per foot of sleeve dimension is required. Angles should lap masonry a minimum of 1" around the entire opening.
5. Maximum sleeve extension from the wall or floor opening is 6" on the damper side without actuator.
   Maximum sleeve extension from the wall or floor opening is 16" on the damper side with actuator.
6. Dampers may be installed outside the rated ceiling surface, provided that the edge of the damper frame does not exceed 3” from the rated
   surface and a qualified thermal blanket is installed around the sleeve, 8” high.
7. The connection ducts shall not be continuous, but shall terminate at the sleeve or frame.
8. Dampers are supplied with factory mounted actuators designed to close automatically upon loss of power.
9. The jackshaft side of the damper may be installed either "upstream" or "downstream".
10. A continuous bead of Dow Corning RTV-732, Dow Corning 999A, GE-1200 Silicone Rubber Sealant (or approved equal) shall be applied
    between the damper and the sleeve for its entire profile on one side of the installation as a minimum.
11. Installed damper units require operational checks upon completion to ensure proper functioning.
12. An access door is a NFPA requirement for damper inspection and testing.
13. For use in static and dynamic systems up to the maximum rated temperature, velocity and water gauge.
14. Electric actuator connections shall conform to the National Electric Code.
15. Pneumatic actuators require metallic airline connections, and a minimum of 20PSI supply air. (Not to exceed 30PSI)
16. **CAUTION: THE HEAVY DAMPER CLOSURE SPRING IS UNDER LOAD.**

231 Commerce Dr. Montgomeryville, PA 18936
Tel: 215-412-4445 Fax: 215-412-4409
Email: lloydind@firedamper.com

138 Industrial Loop West, Orange Park, FL 32073
Tel: 904-541-1655 Fax: 904-541-1657
Email: lloydind1@firedamper.com

B1, 4/F., Luen Ming Hing Factory Building
36 Mok Cheong St.,
To Kwa Wan, Kowloon, H. K.
Tel: 852-2760-4188 Fax: 852-2760-4177
Email: tatanlexyim@lloydasia.com

Website: www.firedamper.com

*ALL STATED SPECIFICATIONS ARE SUBJECT TO UPDATE WITHOUT NOTICE OR OBLIGATION.



Lloyd Industries Inc. 2017

## CORRIDOR FIRE/SMOKE DAMPER

CFSD models are available in 5 different configurations to accommodate a variety of installation and access requirements. Drawings below illustrate these different configurations.

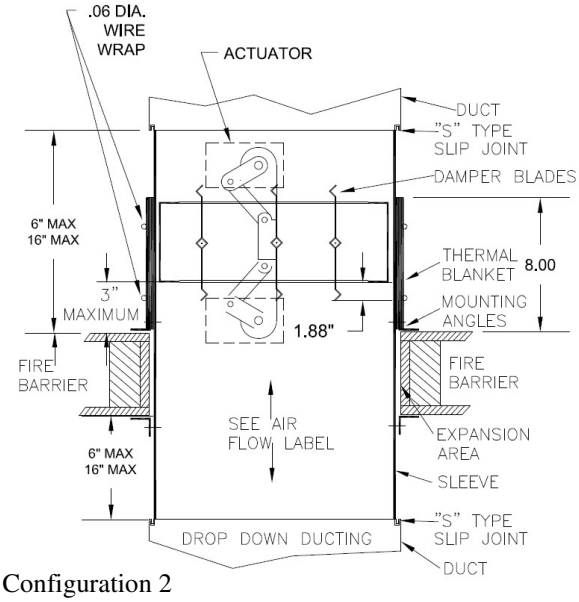


Configuration 2

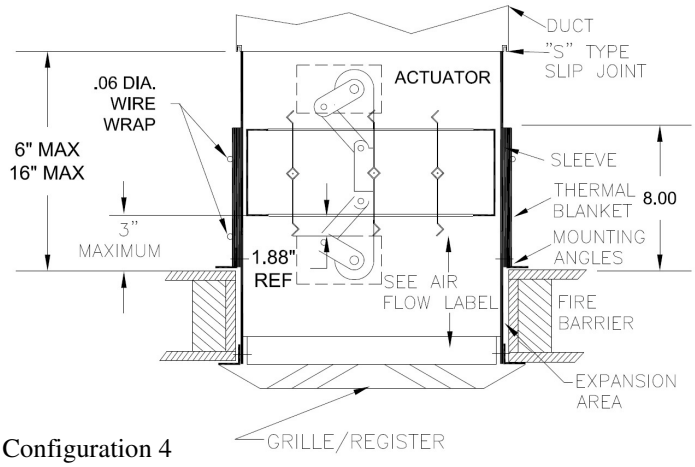


Configuration 4

HORIZONTAL MOUNT 1HR RATED DAMPER

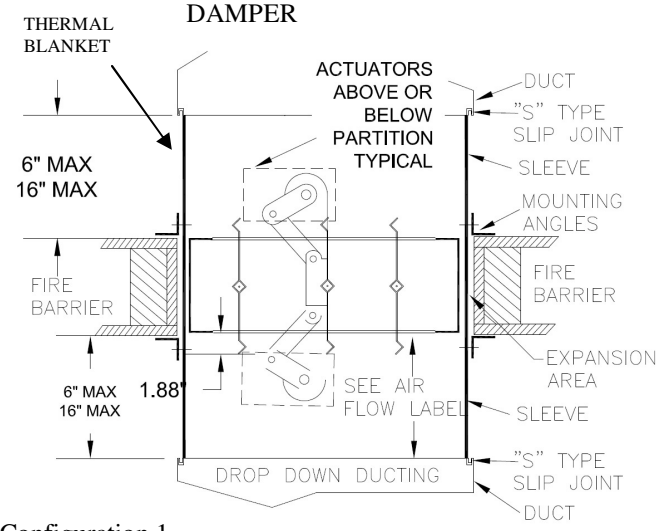


Configuration 1

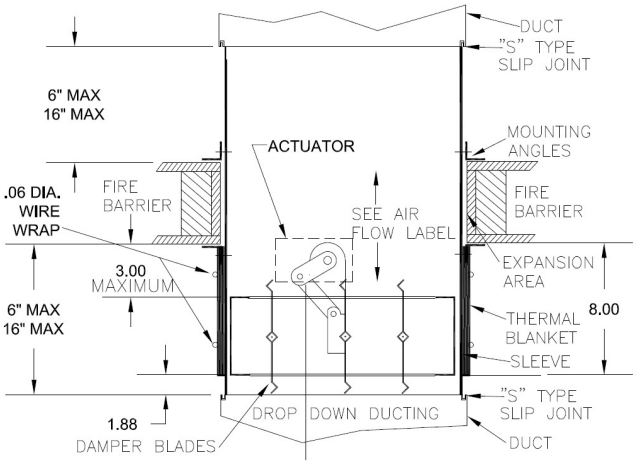


Configuration 3

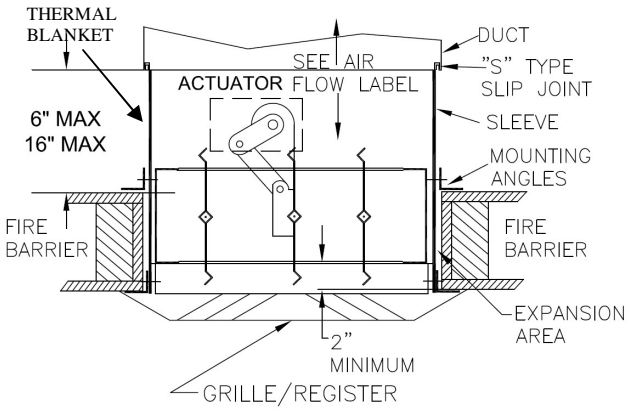


Configuration 5

231 Commerce Dr. Montgomeryville, PA 18936
Tel: 215-412-4445 Fax: 215-412-4409
Email: lloydind@firedamper.com

138 Industrial Loop West, Orange Park, FL 32073
Tel: 904-541-1655 Fax: 904-541-1657
Email: lloydind1@firedamper.com

B1, 4/F., Luen Ming Hing Factory Building
36 Mok Cheong St.,
To Kwa Wan, Kowloon, H. K.
Tel: 852-2760-4188 Fax: 852-2760-4177
Email: tatanlexyim@lloydasia.com

Website: www.firedamper.com

*ALL STATED SPECIFICATIONS ARE SUBJECT TO UPDATE WITHOUT NOTICE OR OBLIGATION.



Lloyd Industries Inc. 2017

# BOOT CLIP INSTALLATION INSTRUCTION

**General Installation Instructions for Model:**
**CRD50-NI-BT & CRD-50-NI-EA**
**CRD50-95-NI-BT & CRD50-95-NI-BT-EA**

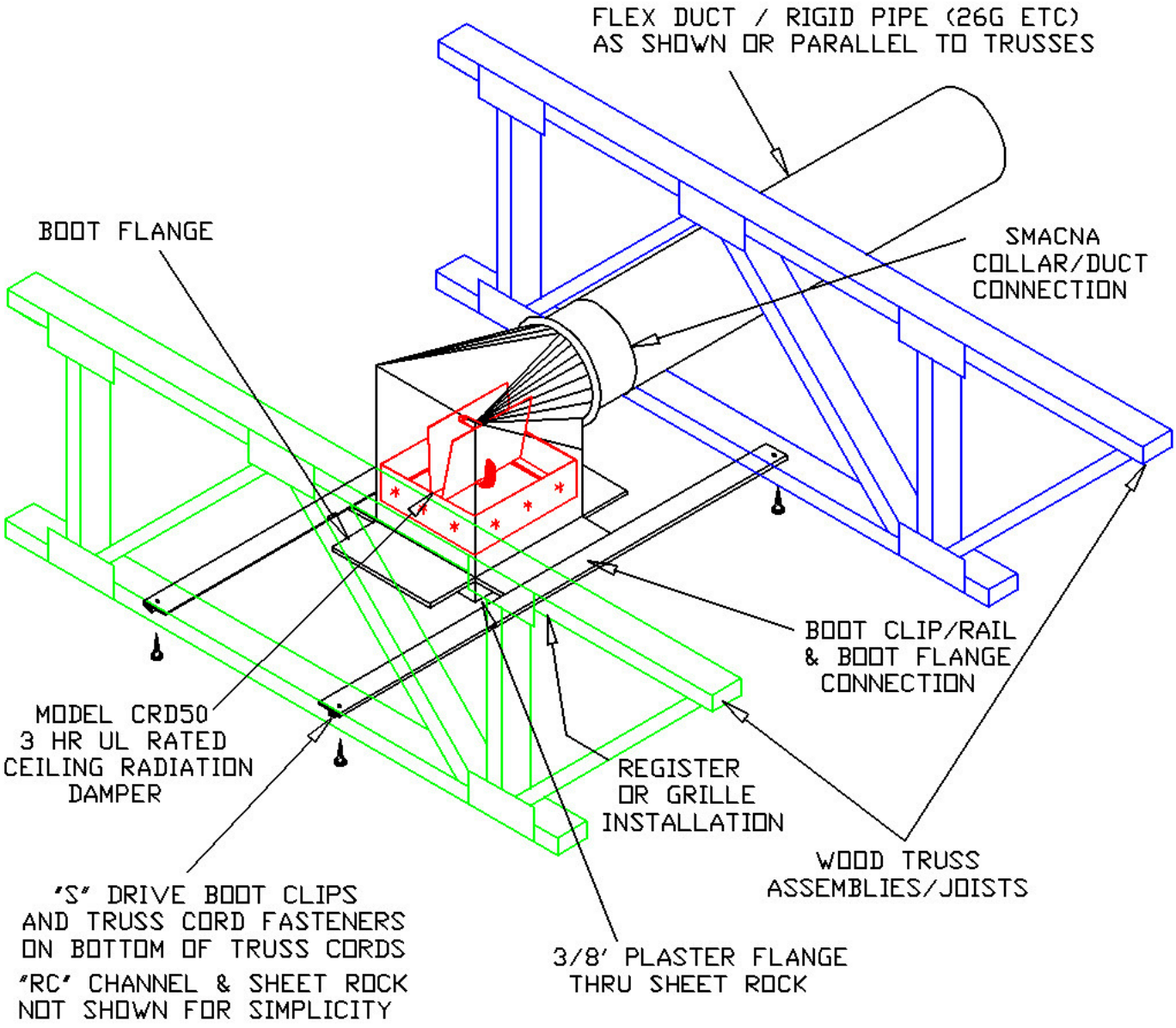


VIDEO

Please visit firedamper.com for a video installation instruction.

All installations are subject to local authority approval prior to ordering and installing dampers

231 Commerce Dr. Montgomeryville, PA 18936
Tel: 215-412-4445 Fax: 215-412-4409
Email: lloydind@firedamper.com

138 Industrial Loop West, Orange Park, FL 32073
Tel: 904-541-1655 Fax: 904-541-1657
Email: lloydind1@firedamper.com

B1, 4/F., Luen Ming Hing Factory Building
36 Mok Cheong St.,
To Kwa Wan, Kowloon, H. K.
Tel: 852-2760-4188 Fax: 852-2760-4177
Email: tatanlexyim@lloydasia.com

Website: www.firedamper.com

*ALL STATED SPECIFICATIONS ARE SUBJECT TO UPDATE WITHOUT NOTICE OR OBLIGATION.



Lloyd Industries Inc. 2017

# LLOYD INDUSTRIES INC.

WWW.FIREDAMPER.COM

## BOOT CLIP INSTALLATION INSTRUCTION

Model: CRD50-NI-BT & CRD50-NI-BT-EA
Model: CRD95-NI-BT & CRD95-NI-BT-EA
For 1 hour Fire Rated wood truss floor/ceiling & roof/ceiling partitions
UL L-563 & P-544 Rated wood truss partition types
For full truss type list see the Lloyd Industries truss comparison sheet

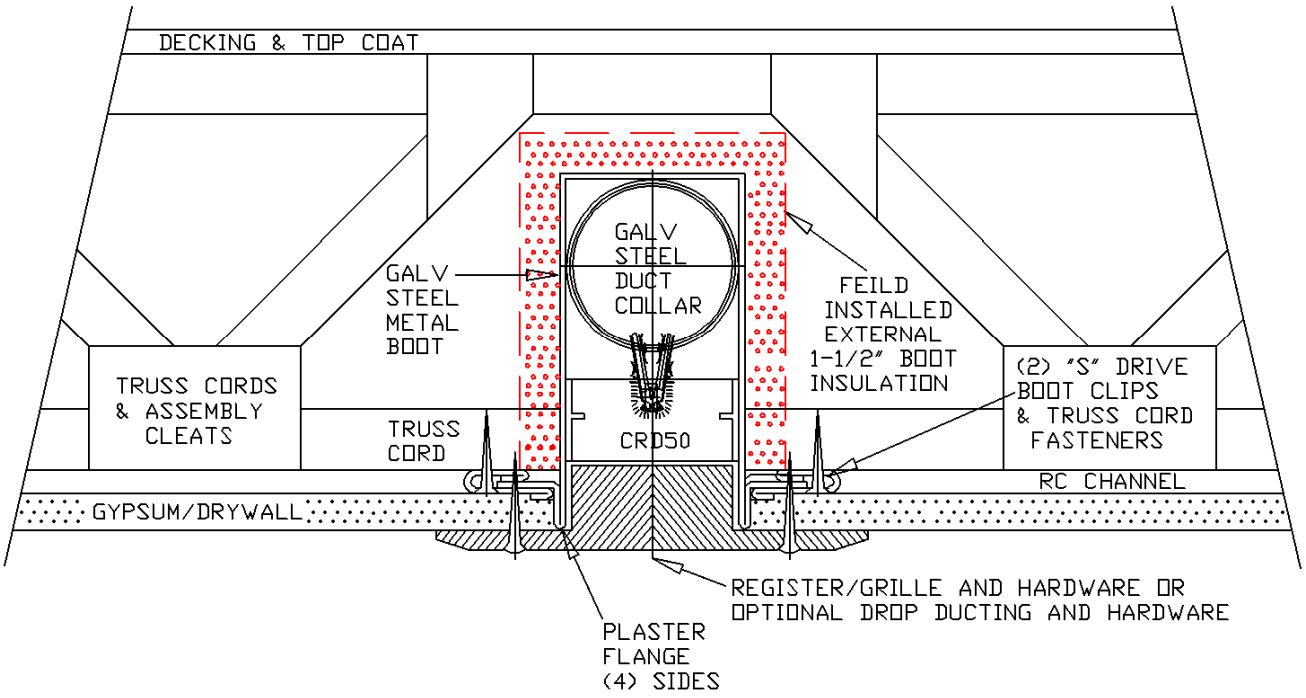


1. Before installing the damper, CRD Model 50 (rectangle), and CRD Model 50-EA (rectangle) open the blades and hook the fusible link over the link catch on the opposite blade. Bend down the link catch to secure the link in position. For CRD Model 50-EA (Easy Access Fusible Link Attachment) flex the spring wire and secure the link.
2. Install (2) "S" Drive Boot Clips parallel & centered on the galvanized steel boot flanges.
3. Raise the CRD/Boot Assembly to the ceiling positioning the assembly boot clips under (2) truss cords. (Shim if required)
4. Fastened boot clips to the truss cords/joists or other structural members with a minimum of (1) fastener for each mounting point (4 places minimum) using #8-#12 drywall or wood screws X 1-1/4" long minimum.
5. Verify the plenum box location & height adjusting for "RC" channel depth as required to insure plaster flange penetration.
6. Verify the damper blade closure & function prior to assembly of gypsum or ceiling materials.
7. Install duct work and duct fasteners as per SMACNA Standards.
8. Note: These assemblies will be provided with 1" or 1-1/2" fiberglass insulated boots/plenum boxes.
9. Install gypsum materials. Note: Insure that the space between the gypsum ceiling material and damper/box at final assembly does not exceed 1/8" maximum on the sides of the box. (1/16"/side)
10. After ceiling materials have been installed & inspected, install and fasten the register/grille using a minimum of (2) #8-#10 x 3" long sheet metal, or drywall screws fastening through the ceiling material and into the CRD boot galvanized steel flanges. Note: For Drop Ducting connect drop ducting as per SMACNA Standards.

Special Note:

11. Check the damper function upon completion.

INSTALLATION INSTRUCTIONS AND THE PRODUCTS SPECIFIED, ARE IN CONFORMANCE TO ALL OF UNDERWRITERS LABORATORIES REQUIREMENTS 555C

Please visit firedamper.com for a video installation instruction.

All installations are subject to local authority approval prior to ordering and installing dampers

231 Commerce Dr. Montgomeryville, PA 18936
Tel: 215-412-4445 Fax: 215-412-4409
Email: lloydind@firedamper.com

138 Industrial Loop West, Orange Park, FL 32073
Tel: 904-541-1655 Fax: 904-541-1657
Email: lloydind1@firedamper.com

B1, 4/F., Luen Ming Hing Factory Building
36 Mok Cheong St.,
To Kwa Wan, Kowloon, H. K.
Tel: 852-2760-4188 Fax: 852-2760-4177
Email: tatanlexyim@lloydasia.com

Website: www.firedamper.com

*ALL STATED SPECIFICATIONS ARE SUBJECT TO UPDATE WITHOUT NOTICE OR OBLIGATION.



Lloyd Industries Inc. 2017

# LLOYD INDUSTRIES INC.

WWW.FIREDAMPER.COM

## BOOT CLIP INSTALLATION INSTRUCTION

Insulated Model: CRD50-BT-4.2 & CRD50-BT-EA-4.2
Insulated Model: CRD50-BT-6.0 & CRD50-BT-EA-6.0
For 1 hour Fire Rated wood truss floor/ceiling & roof/ceiling partitions
UL L-563 & P-544 Rated wood truss partition types
For full truss type list see the Lloyd Industries truss comparison sheet

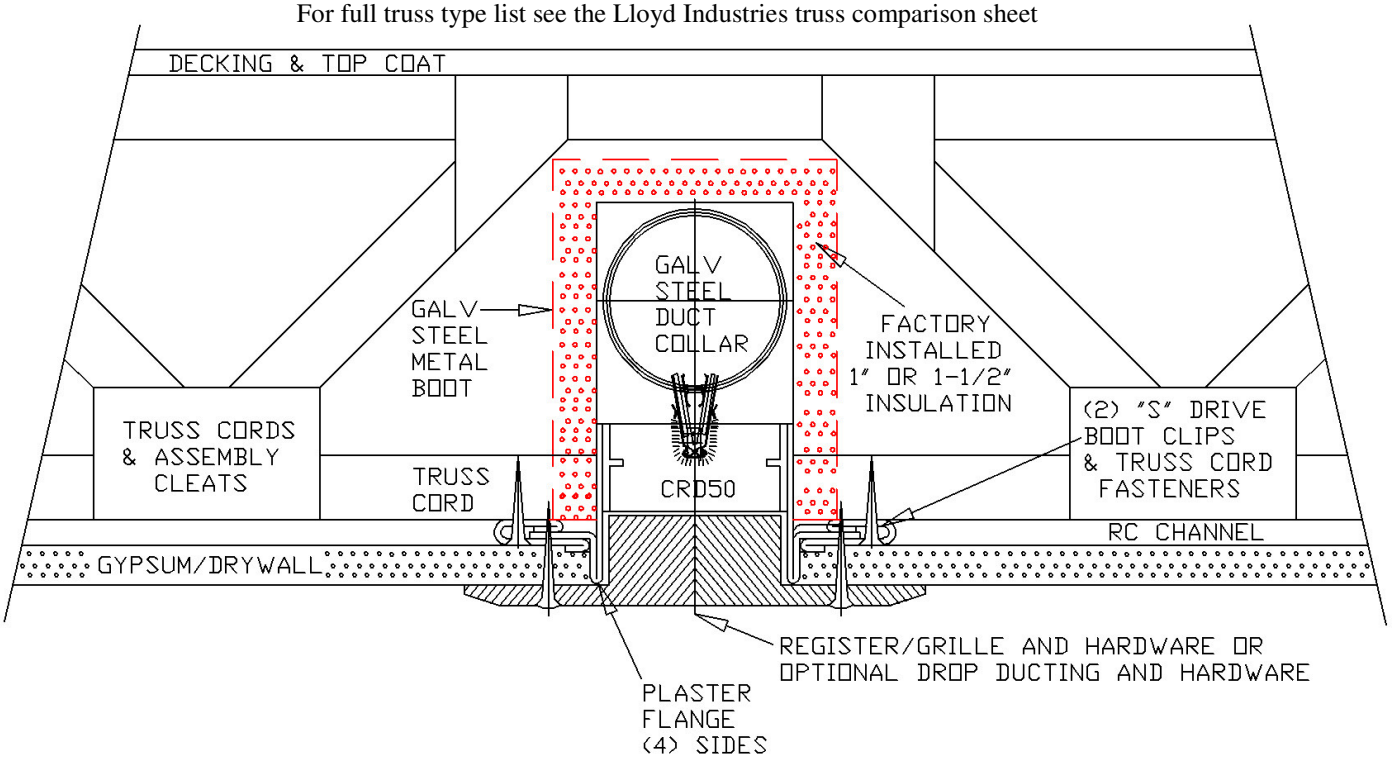


1. Before installing the damper, CRD Model 50 (rectangle), and CRD Model 50-EA (rectangle) open the blades and hook the fusible link over the link catch on the opposite blade. Bend down the link catch to secure the link in position. For CRD Model 50-EA (Easy Access Fusible Link Attachment) flex the spring wire and secure the link.
2. Install (2) "S" Drive Boot Clips parallel & centered on the galvanized steel boot flanges.
3. Raise the CRD/Boot Assembly to the ceiling positioning the assembly boot clips under (2) truss cords. (Shim if required)
4. Fastened boot clips to the truss cords/joists or other structural members with a minimum of (1) fastener for each mounting point (4 places minimum) using #8-#12 drywall or wood screws X 1-1/4" long minimum.
5. Verify the plenum box location & height adjusting for "RC" channel depth as required to insure plaster flange penetration.
6. Verify the damper blade closure & function prior to assembly of gypsum or ceiling materials.
7. Install duct work and duct fasteners as per SMACNA Standards.
8. Insulate the boot box using 1-1/2" fiberglass insulation batts, or other, fastening with zip ties & 2" wide aluminum tape.
9. Install gypsum materials. Note: Insure that the space between the gypsum ceiling material and damper/box at final assembly does not exceed 1/8" maximum on the sides of the box. (1/16"/side)
10. After ceiling materials have been installed & inspected, install and fasten the register/grille using a minimum of (2) #8-#10 x 3" long sheet metal, or drywall screws fastening through the ceiling material and into the CRD boot galvanized steel flanges.

Special Note:

11. Check the damper function upon completion.

INSTALLATION INSTRUCTIONS AND THE PRODUCTS SPECIFIED, ARE IN CONFORMANCE TO ALL OF UNDERWRITERS LABORATORIES REQUIREMENTS 555C

Please visit firedamper.com for a video installation instruction.

All installations are subject to local authority approval prior to ordering and installing dampers

231 Commerce Dr. Montgomeryville, PA 18936
Tel: 215-412-4445 Fax: 215-412-4409
Email: lloydind@firedamper.com

138 Industrial Loop West, Orange Park, FL 32073
Tel: 904-541-1655 Fax: 904-541-1657
Email: lloydind1@firedamper.com

B1, 4/F., Luen Ming Hing Factory Building
36 Mok Cheong St.,
To Kwa Wan, Kowloon, H. K.
Tel: 852-2760-4188 Fax: 852-2760-4177
Email: tatanlexyim@lloydasia.com

Website: www.firedamper.com

*ALL STATED SPECIFICATIONS ARE SUBJECT TO UPDATE WITHOUT NOTICE OR OBLIGATION.



Lloyd Industries Inc. 2017

# LLOYD INDUSTRIES INC.

WWW.FIREDAMPER.COM

# BOOT CLIP INSTALLATION INSTRUCTION

Model: CRD50-FGPB-4.2 & CRD50-EA-FGPB-4.2 (SIDE OUTLET) with F/G Box ASM.
Model: CRD50-FGPB-4.2-CP & CRD50-EA-FGPB-4.2-CP (SIDE OUTLET) with F/G Box ASM.
Model: CRD50-FGPB-6.0 & CRD50-EA-FGPB-6.0 (SIDE OUTLET) with F/G Box ASM.
For Register/Grille and Ducted Application
For 1 hour Rated Assemblies for use in UL rated wood truss type partitions
UL L-563 rated Floor/ceiling , P-544 rated Roof/ceiling, Truss/gypsum constructions

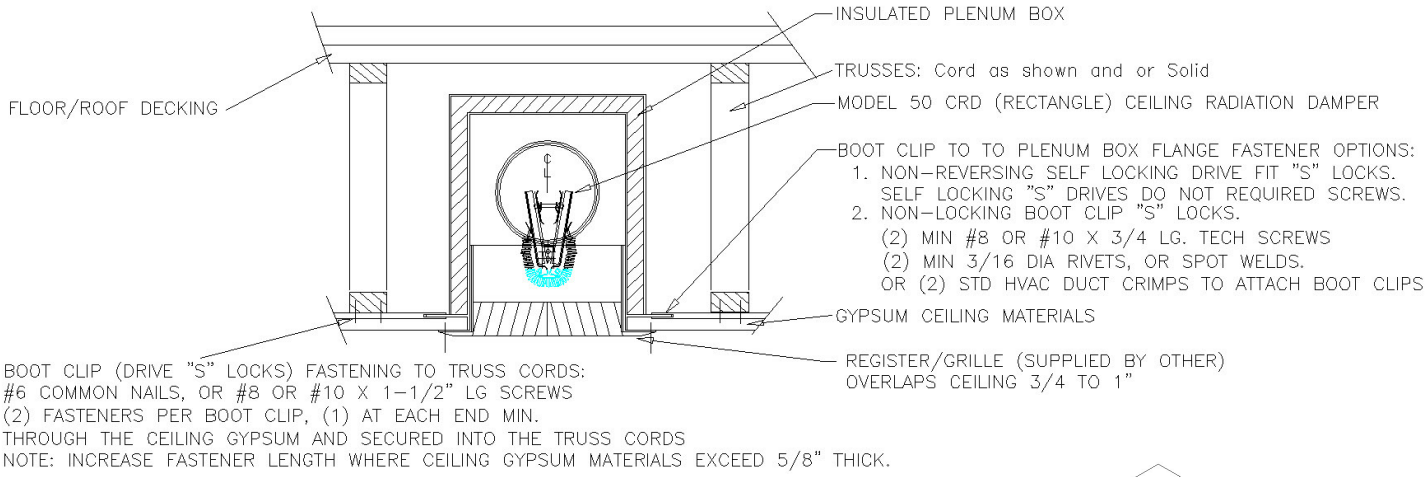


1. Before installing the damper, Model CRD-50-FGPB (rectangle), and Model CRD-50 -EA-FGPB (rectangle) open the blades and hook the fusible link over the link catch on the opposite blade. Bend down the link catch to secure the link in position. For Model CRD-50-EA-FGPB flex the spring wire and secure the link.
2. Measure the actual truss centers and add approx. 6" to determine boot clip lengths. ((2) required per box)
3. Drive (2) Self Locking "S" Boot Clips to the plenum box flange centering the plenum a box as required. Where required to insure permanent attachment, fasten boot clips to the plenum box using the fasteners listed below. **Note: When Non-Drive boot clips are used, fasten boot clips to the plenum box flange using a minimum of (2) #8 or #10 x 3/4" Lg sheet metal screws, (2) 3/16" diameter rivets, or (2) spot welds, for each boot clip.**
4. Boot Clips are fastened to joists or other structural members with a minimum of two fasteners for each mounting point using #6 common nails or #8/#10 x 1-1/2" min. lg screws. **Note: Increase fastener length where gypsum/drywall ceiling materials exceed 5/8" thick.**
5. The clearance between each side of the ceiling damper and the duct drop shall be 1/8 inch maximum.
6. Steel or Aluminum grille or diffuser to be attached to the duct drop or ceiling damper using #8 by 1/2 inch long sheet metal screws at 6 inches o.c. and a minimum of (3) places.

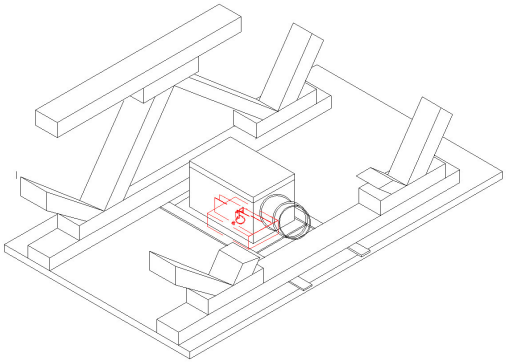

SIDE OUTLET THRU TRUSS CORD

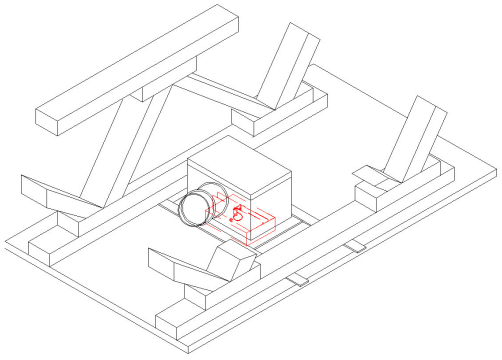

SIDE OUTLET PARALLEL TO TRUSSES

**IMPORTANT NOTES:**
**REGISTER BOX/DROP DUCT INSTALLATIONS MUST BE INSULATED AND CONFORM TO LOCAL AUTHORITY REQUIREMENTS FASTENERS MUST NOT INTERFERE WITH THE DAMPER BLADES OPERATION.**

INSTALLATION INSTRUCTIONS AND THE PRODUCTS SPECIFIED, ARE IN CONFORMANCE TO ALL OF UNDERWRITERS LABORATORIES REQUIREMENTS 555C

Please visit firedamper.com for a video installation instruction.

All installations are subject to local authority approval prior to ordering and installing dampers

231 Commerce Dr. Montgomeryville, PA 18936
Tel: 215-412-4445 Fax: 215-412-4409
Email: lloydind@firedamper.com

138 Industrial Loop West, Orange Park, FL 32073
Tel: 904-541-1655 Fax: 904-541-1657
Email: lloydind1@firedamper.com

B1, 4/F., Luen Ming Hing Factory Building
36 Mok Cheong St.,
To Kwa Wan, Kowloon, H. K.
Tel: 852-2760-4188 Fax: 852-2760-4177
Email: tatanlexyim@lloydasia.com

Website: www.firedamper.com

*ALL STATED SPECIFICATIONS ARE SUBJECT TO UPDATE WITHOUT NOTICE OR OBLIGATION.



Lloyd Industries Inc. 2017

# LLOYD INDUSTRIES INC.

WWW.FIREDAMPER.COM

## INSTALLATION INSTRUCTION

Model:
CRD 50-FGPB-4.2-NI & CRD 50-EA-FGPB-4.2-NI for register & grille installations
CRD 50-FGPB-4.2-NI & CRD 50-EA-FGPB-4.2-NI for drop thru duct installations
CRD 50-FGPB-6.0-NI & CRD 50-EA-FGPB-6.0-NI for register & grille installations
CRD 50-FGPB-6.0-NI & CRD 50-EA-FGPB-6.0-NI for drop thru duct installations

(1) Lloyd Industries UL 555-C listed ceiling radiation damper
(2) Easy access or standard fusible link (165°F std)(212°F optional)
(3) Fiberglass ductboard plenum box (ul rated 181 class 1)(see note)
(4) Damper sleeve: flanged for plenum insulation support (22 Ga. galvanized steel)
(5) Register/grille sleeve 22 Ga. galvanized steel. (for 5/8" thick gypsum)
(6) Support angles (2) per unit: factory installed or supplied separately
    A. std. (16 Ga. galvanized steel 3/4" x 3/4" x 26" lg)
    B. optional (22 Ga. galvanized 1-1/2" x 1-1/2" x 26" lg)
(7) Support angle fasteners (fastens support angles to damper) #8 x 3/4" lg steel sheet metal screws, 3/16 diameter steel rivets, or spot welds. (2) places on each support angle minimum. when the (4) adjustable angle brackets are used, use fasteners above and secure support angles to adjustable brackets with a minimum of (1) fastener for each bracket.
(8) Support angle fasteners (angles to truss cords) #8 or #10 x 1-1/2" lg steel sheet metal or drywall screws or #6 common nails (8) plcs.
(9) Drop duct sleeve 22 Ga. galvanized steel
(10) Drop duct mounting angles (4) 22 Ga. x 1" x 1" galvanized steel
(11) Drop duct angle fasteners (angles to sleeve) #8 or #10 x 3/4" lg steel sheet metal screws or 3/16" steel pop rivets (8) plcs.
(12) Ref: design l-563 wood truss ASM:
    A. deck/roof materials
    B. truss wood cords
    C. RC channel
    D. gypsum board 5/8" thick minimum
(13) Register/grille (26 ga steel min)(.55 mm) (provided by other)
(14) Register/grille steel mounting screws (2) #8 x 2" lg minimum. (provided by other)
(15) Flexible duct and duct connectors: UL Classified class 0 or class 1 (provided and installed by other)
(16) Boot clip installation permitted using (2) #8 or #10 steel sheet metal screws. use a min of (2) #8 "s" type steel screws to fasten to truss cords at each mounting point. use (2) crimp connections or hardware above to fasten non-locking boot clips to

These damper assemblies have been tested and approved for installation in 1 Hour roof/ceiling, floor/ceiling design numbers: UL-L-563 and UL-P-544

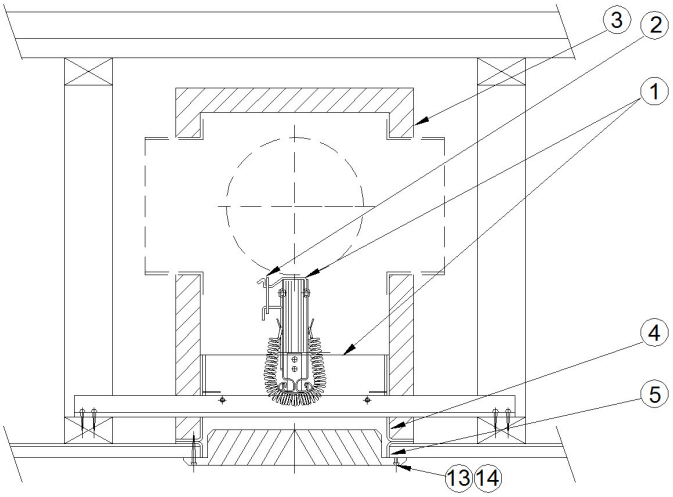


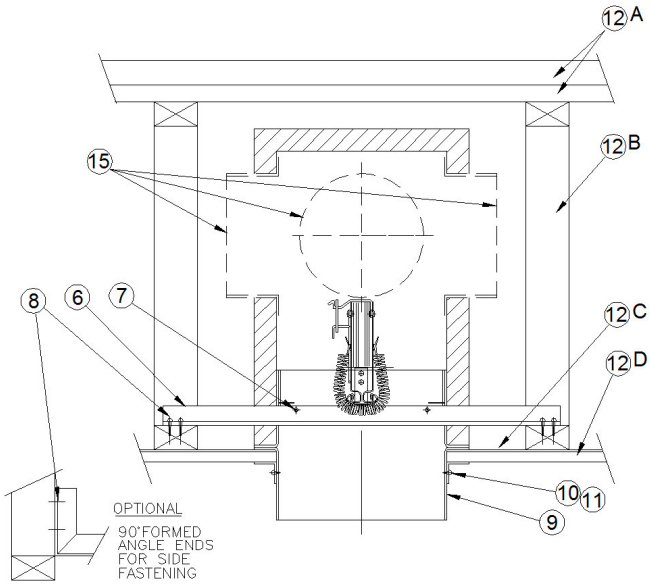


INSTALLATION INSTRUCTIONS AND THE PRODUCTS SPECIFIED, ARE IN CONFORMANCE TO ALL OF UNDERWRITERS LABORATORIES REQUIREMENTS 555C

All installations are subject to local authority approval prior to ordering and installing dampers

231 Commerce Dr. Montgomeryville, PA 18936
Tel: 215-412-4445 Fax: 215-412-4409
Email: lloydind@firedamper.com

138 Industrial Loop West, Orange Park, FL 32073
Tel: 904-541-1655 Fax: 904-541-1657
Email: lloydind1@firedamper.com

B1, 4/F., Luen Ming Hing Factory Building
36 Mok Cheong St.,
To Kwa Wan, Kowloon, H. K.
Tel: 852-2760-4188 Fax: 852-2760-4177
Email: tatanlexyim@lloydasia.com

Website: www.firedamper.com

*ALL STATED SPECIFICATIONS ARE SUBJECT TO UPDATE WITHOUT NOTICE OR OBLIGATION.



Lloyd Industries Inc. 2017

# INSTALLATION INSTRUCTION

Model:
CRD 50-FGPB-4.2-NI & CRD 50-EA-FGPB-4.2-NI for register & grille installations
CRD 50-FGPB-4.2-NI & CRD 50-EA-FGPB-4.2-NI for drop thru duct installations
CRD 50-FGPB-6.0-NI & CRD 50-EA-FGPB-6.0-NI for register & grille installations
CRD 50-FGPB-6.0-NI & CRD 50-EA-FGPB-6.0-NI for drop thru duct installations

1. **These Assemblies Must Be Insulated As Specified By The Additional Lloyd Ind. Fabrication Sheets To Maintain 1-hr Fire Resistance Ratings. Prior To Installation, Cut, Fabricate, & Install Fiberglass Plenum Boxes Using Only UL Approved Ductboard And Aluminum Tape As Specified In The Applicable Lloyd Industries Fiberglass Plenum Box Fabrication Sheet #10515.**
2. Before installing the damper assembly, open the ceiling radiation damper blades and secure the blades open with the easy access wire catch and the temperature rated fusible link.
3. Ceiling penetrations should be located between adjacent trusses and RC Channels using a s a minimum of 1-3/4" from the truss to the outside of the plenum box as shown. If required (1) RC Channel may be cut to allow installation. The clearance between the damper/sleeve and the gypsum ceiling material must not exceed 1/16" per side and 1/8" total max.
4. Installation:
   A. If support angles have been provided pre-assembled to the units by the factory, center dampers between trusses and locate support angle rails on top of the lower truss cords. Fasten using a minimum of (2) #8, or #10 wood or drywall steel screws X 1-1/2" lg or #6 common nails at each mounting point.
   B. Support angles may be cut and formed 90° for truss side mounting inside truss cords as shown.
   C. If support angles have been provided separate from the unit, establish the dimension for the gypsum flange location to the top of the lower truss cord and fasten (2) support angles to units using (2) #8 x 3/4" lg steel sheet metal screws or (2) 3/16" diameter steel rivets for each angle. **NOTE: Insure that fasteners do not interfere with the ceiling radiation damper operation.**
5. The Fiberglass insulation plenum box permits cutting and installing a maximum of (3) collars for class 1 or class 0 flexible ducting. Use UL 181 Class 1 reinforced 2" wide aluminum Tape where required for assembly and box/duct sealing. **NOTE: Duct and collar installation must not interfere with damper operation inside the fiberglass ductboard plenum box.**
6. Registers/grilles of steel construction with 26 Ga. (.55 mm) minimum are to be attached to the ceiling radiation damper gypsum flange using (2) #8 x 2" lg steel sheet metal screws minimum. (1) at each end of the grille/register minimum.
7. Drop duct installations require 22 Ga. 1" x 1" retaining angles on all (4) sides fastened to the steel drop duct sleeve using (2) #8 x 3/4" lg steel sheet metal or 3/16" diameter steel rivets on each side as shown.

INSTALLATION INSTRUCTIONS AND THE PRODUCTS SPECIFIED, ARE IN CONFORMANCE TO ALL OF UNDERWRITERS LABORATORIES REQUIREMENTS 555C

All installations are subject to local authority approval prior to ordering and installing dampers

231 Commerce Dr. Montgomeryville, PA 18936
Tel: 215-412-4445 Fax: 215-412-4409
Email: lloydind@firedamper.com

138 Industrial Loop West, Orange Park, FL 32073
Tel: 904-541-1655 Fax: 904-541-1657
Email: lloydind1@firedamper.com

B1, 4/F., Luen Ming Hing Factory Building
36 Mok Cheong St.,
To Kwa Wan, Kowloon, H. K.
Tel: 852-2760-4188 Fax: 852-2760-4177
Email: tatanlexyim@lloydasia.com

Website: www.firedamper.com

*ALL STATED SPECIFICATIONS ARE SUBJECT TO UPDATE WITHOUT NOTICE OR OBLIGATION.



Lloyd Industries Inc. 2017

# LLOYD INDUSTRIES INC.

WWW.FIREDAMPER.COM

## INSTALLATION INSTRUCTION

Model:

CRD 50-FGPB-4.2 & CRD 50-EA-FGPB-4.2 for register & grille installations
CRD 50-FGPB-4.2 & CRD 50-EA-FGPB-4.2 for drop thru duct installations
CRD 50-FGPB-4.2-CP & CRD 50-EA-FGPB-4.2-CP for register & grille installations
CRD 50-FGPB-4.2-CP & CRD 50-EA-FGPB-4.2-CP for drop thru duct installations
CRD 50-FGPB-6.0-NI & CRD 50-EA-FGPB-6.0-NI for register & grille installations
CRD 50-FGPB-6.0-NI & CRD 50-EA-FGPB-6.0-NI for drop thru duct installations

(1) Lloyd Industries UL 555-C listed ceiling radiation damper
(2) Easy access or std fusible link (165°F std)(212°F optional)
(3) Fiberglass ductboard plenum box (UL rated 181 class 1)(see note)
(4) Damper sleeve: flanged for plenum insulation support (22 Ga. galvanized steel)
(5) Register/grille sleeve 22 Ga. galvanized steel. (for 5/8" thick gypsum)
(6) Support angles (2) per unit: factory installed or supplied separately
    A. std. (16 Ga. galvanized steel 3/4" x 3/4" x 26" lg)
    B. optional (22 Ga. galvanized 1-1/2" x 1-1/2" x 26" lg)
(7) Support angle fasteners (fastens support angles to damper) #8 x 3/4" lg steel sheet metal screws, 3/16 diameter steel rivets, or spot welds. (2) places on each support angle minimum. when the (4) adjustable angle brackets are used, use fasteners above and secure support angles to adjustable brackets with a minimum of (1) fastener for each bracket.
(8) Support angle fasteners (angles to truss cords) #8 or #10 x 1-1/2" lg steel sheet metal or drywall screws or #6 common nails (8) plcs.
(9) Drop duct sleeve 22 Ga. galvanized steel
(10) Drop duct mounting angles (4) 22 Ga. x 1" x 1" galvanized steel
(11) Drop duct angle fasteners (angles to sleeve) #8 or #10 x 3/4" lg steel sheet metal screws or 3/16" steel pop rivets (8) plcs.
(12) Ref: design l-563 wood truss ASM:
    A. deck/roof materials
    B. truss wood cords
    C. RC channel
    D. gypsum board 5/8" thick minimum
(13) Register/grille (26 ga steel min)(.55 mm) (provided by other)
(14) Register/grille steel mounting screws (2) #8 x 2" lg minimum. (provided by other)
(15) Flexible duct and duct connectors: UL Classified class 0 or class 1 (provided and installed by other)
(16) Boot clip installation permitted using (2) #8 or #10 steel sheet metal screws. use a min of (2) #8 "s" type steel screws to fasten to truss cords at each mounting point. use (2) crimp connections or hardware above to fasten non-locking boot clips to

These Damper Assemblies Have Been Tested And Approved For Installation In 1 Hour Roof/ceiling, Floor/ceiling Design Numbers: UL-L558, L562, L563, LL574,L585, P533, P544, P545 and P547

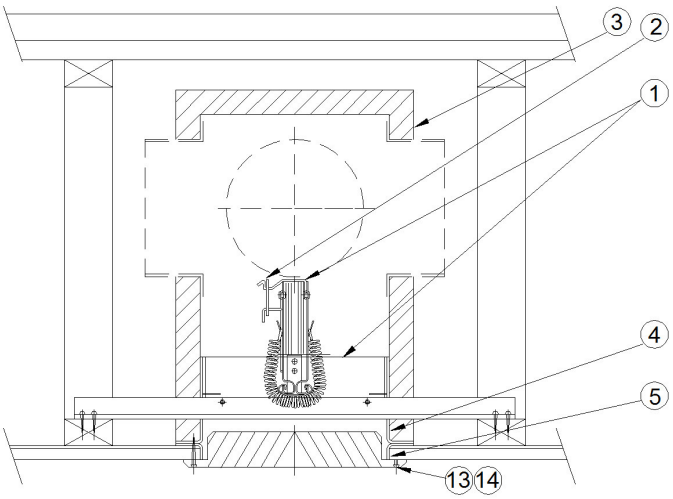


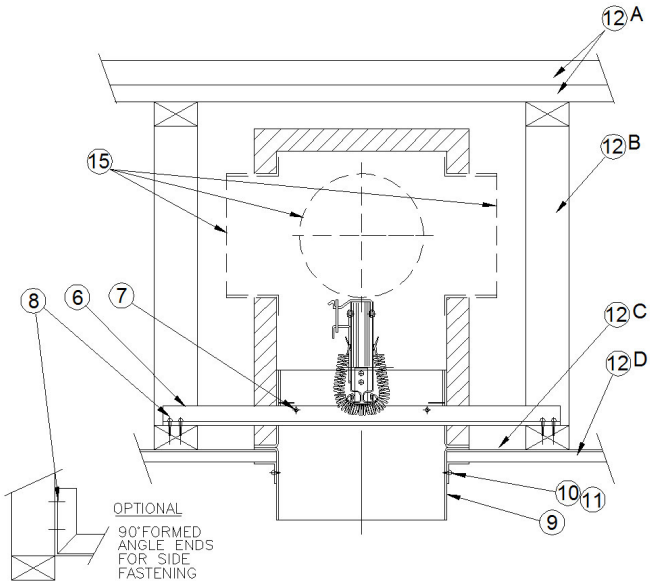


INSTALLATION INSTRUCTIONS AND THE PRODUCTS SPECIFIED, ARE IN CONFORMANCE TO ALL OF UNDERWRITERS LABORATORIES REQUIREMENTS 555C

All installations are subject to local authority approval prior to ordering and installing dampers

231 Commerce Dr. Montgomeryville, PA 18936
Tel: 215-412-4445 Fax: 215-412-4409
Email: lloydind@firedamper.com

138 Industrial Loop West, Orange Park, FL 32073
Tel: 904-541-1655 Fax: 904-541-1657
Email: lloydind1@firedamper.com

B1, 4/F., Luen Ming Hing Factory Building
36 Mok Cheong St.,
To Kwa Wan, Kowloon, H. K.
Tel: 852-2760-4188 Fax: 852-2760-4177
Email: tatanlexyim@lloydasia.com

Website: www.firedamper.com

*ALL STATED SPECIFICATIONS ARE SUBJECT TO UPDATE WITHOUT NOTICE OR OBLIGATION.



Lloyd Industries Inc. 2017

# INSTALLATION INSTRUCTION

Model:
CRD 50-FGPB-4.2 & CRD 50-EA-FGPB-4.2 for register & grille installations
CRD 50-FGPB-4.2 & CRD 50-EA-FGPB-4.2 for drop thru duct installations
CRD 50-FGPB-4.2-CP & CRD 50-EA-FGPB-4.2-CP for register & grille installations
CRD 50-FGPB-4.2-CP & CRD 50-EA-FGPB-4.2-CP for drop thru duct installations
CRD 50-FGPB-6.0-NI & CRD 50-EA-FGPB-6.0-NI for register & grille installations
CRD 50-FGPB-6.0-NI & CRD 50-EA-FGPB-6.0-NI for drop thru duct installations

1. Before installing the damper assembly, open the ceiling radiation damper blades and secure the blades open with the easy access wire catch and the temperature rated fusible link.
2. Ceiling penetrations should be located between adjacent trusses and RC Channels using a s a minimum of 1-3/4" from the truss to the outside of the plenum box as shown. If required (1) RC Channel may be cut to allow installation. The clearance between the damper/sleeve and the gypsum ceiling material must not exceed 1/16" per side and 1/8" total max.
3. Installation:
   A. If support angles have been provided pre-assembled to the units by the factory, center dampers between trusses and locate support angle rails on top of the lower truss cords. Fasten using a minimum of (2) #8, or #10 wood or drywall steel screws X 1-1/2" lg or #6 common nails at each mounting point.
   B. Support angles may be cut and formed 90° for truss side mounting inside truss cords as shown.
   C. If support angles have been provided separate from the unit, establish the dimension for the gypsum flange location to the top of the lower truss cord and fasten (2) support angles to units using (2) #8 x 3/4" lg steel sheet metal screws or (2) 3/16" diameter steel rivets for each angle. **NOTE: Insure that fasteners do not interfere with the ceiling radiation damper operation.**
5. The Fiberglass insulation plenum box permits cutting and installing a maximum of (3) collars for class 1 or class 0 flexible ducting. Use UL 181 Class 1 reinforced 2" wide aluminum Tape where required for assembly and box/duct sealing. **NOTE: Duct and collar installation must not interfere with damper operation inside the fiberglass ductboard plenum box.**
6. Registers/grilles of steel construction with 26 Ga. (.55 mm) minimum are to be attached to the ceiling radiation damper gypsum flange using (2) #8 x 2" lg steel sheet metal screws minimum. (1) at each end of the grille/register minimum.
7. Drop duct installations require 22 Ga. 1" x 1" retaining angles on all (4) sides fastened to the steel drop duct sleeve using (2) #8 x 3/4" lg steel sheet metal or 3/16" diameter steel rivets on each side as shown.

INSTALLATION INSTRUCTIONS AND THE PRODUCTS SPECIFIED, ARE IN CONFORMANCE TO ALL OF UNDERWRITERS LABORATORIES REQUIREMENTS 555C

All installations are subject to local authority approval prior to ordering and installing dampers

231 Commerce Dr. Montgomeryville, PA 18936
Tel: 215-412-4445 Fax: 215-412-4409
Email: lloydind@firedamper.com

138 Industrial Loop West, Orange Park, FL 32073
Tel: 904-541-1655 Fax: 904-541-1657
Email: lloydind1@firedamper.com

B1, 4/F., Luen Ming Hing Factory Building
36 Mok Cheong St.,
To Kwa Wan, Kowloon, H. K.
Tel: 852-2760-4188 Fax: 852-2760-4177
Email: tatanlexyim@lloydasia.com

Website: www.firedamper.com

*ALL STATED SPECIFICATIONS ARE SUBJECT TO UPDATE WITHOUT NOTICE OR OBLIGATION.



Lloyd Industries Inc. 2017

# DROP CEILING INSTALLATION INSTRUCTION

DROP CEILING INSTALLATION SHEET
MODEL CRD-45-LT STANDARD CRD
(RECTANGULAR) (HORIZONTAL)

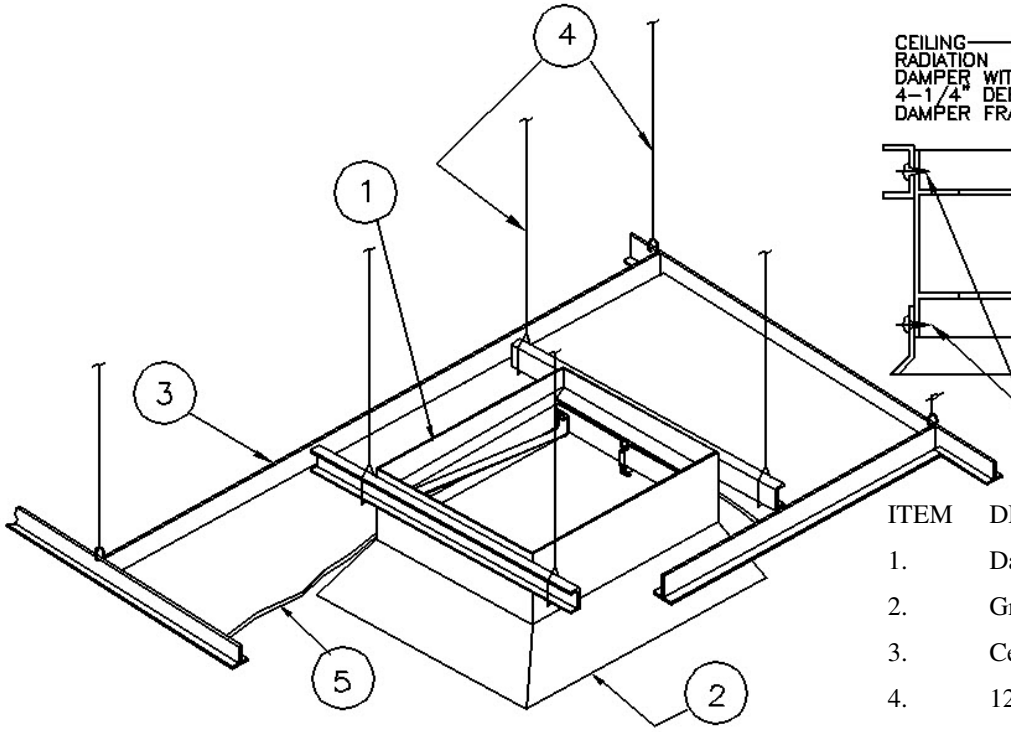


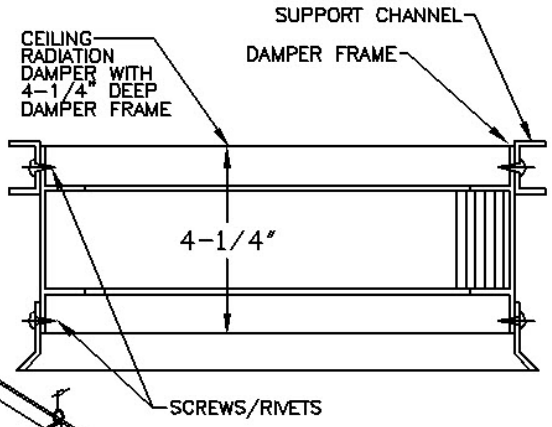


| ITEM | DESCRIPTION |
|---|---|
| 1. | Damper |
| 2. | Grille Frame (20 Gauge Minimum) |
| 3. | Ceiling grid (UL Classified) |
| 4. | 12 Gauge steel wire |
| 5. | Ceiling material (UL Classified) |

These ceiling dampers are Classified by Underwriters Laboratories, Inc. as to heat barriers in the Fire Resistance Directory under the category of Ceiling Dampers (CABS). Refer to the Classification information in the back of the Fire Resistance Directory regarding the use of these dampers in the various floor-ceiling or roof-ceiling assembles. Ceiling dampers and the associated components (surface mounted diffusers or grilles, ducts, etc.) which are to be constructed of steel, are installed in the ceiling to maintain the hourly ratings of the floor-ceiling assemblies (including wood construction) which are rated 3 hours or less. The damper/surface mounted diffuser shall be installed as shown on installation sheet. The damper on the opposite sides shall be connected to support channels (16 MSG by 1-1/2 or 2 inch channel) with 3/16 inch diameter by 1/2 inch long steel bolts, No. 8 by 1/2 inch steel sheet metal screws or 3/16 inch diameter steel rivets at 6 inches OC minimum 3 per side.

The damper assembly shall be hung with 12 SWG minimum hanger wires at each of the channel ends. All hanger wires shall be supported directly from the structural members of the floor or roof by vertical (not diagonal) hanger wires. Cold-rolled channels shall be used as required to insure that the grid and damper are supported from the structural members by vertical hanger wires (not diagonal). The flange on the surface mounted diffuser at the ceiling membrane level shall provide a minimum 1 inch. Support for the ceiling panels. Size of hole cut in the panel for passage of the duct drop shall be more than 1/8 inch. Larger than opening for the damper.

When cutting of a main runner or cross tee is needed, a 1/2 inch clearance must be maintained between the cut end of the main runner or cross tee and the damper. A 12 SWG hanger wire shall be installed near each end of the cut main runner or cross tee. No more than one main runner or cross tee may be cut when penetrating the ceiling membrane.

The steel diffusers shall be attached to the damper with No. 8 sheet metal screws, 3/16" tubular steel rivets, 3/16 inch diameter by half inch long steel bolts, or 1/4" tack welds.

**Rectangular ceiling damper size limitations**

| Maximum Size | Maximum width | Maximum length | Minimum width | Minimum length |
|---|---|---|---|---|
| 196 SQ.IN. | 14” | 14” | 4” | 4” |

231 Commerce Dr. Montgomeryville, PA 18936
Tel: 215-412-4445 Fax: 215-412-4409
Email: lloydind@firedamper.com

138 Industrial Loop West, Orange Park, FL 32073
Tel: 904-541-1655 Fax: 904-541-1657
Email: lloydind1@firedamper.com

B1, 4/F., Luen Ming Hing Factory Building
36 Mok Cheong St.,
To Kwa Wan, Kowloon, H. K.
Tel: 852-2760-4188 Fax: 852-2760-4177
Email: tatanlexyim@lloydasia.com

Website: www.firedamper.com

*ALL STATED SPECIFICATIONS ARE SUBJECT TO UPDATE WITHOUT NOTICE OR OBLIGATION.



Lloyd Industries Inc. 2017

# CEILING INSTALLATION INSTRUCTION

General Installation Instructions
Model 45-LT

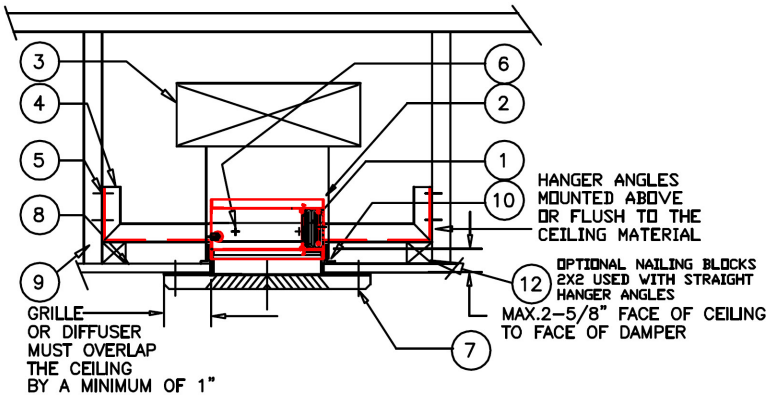


| ITEM | DESCRIPTION |
|---|---|
| 1. | Ceiling Radiation damper |
| 2. | Steel Duct Drop (Less #3 Plenum Permitted) |
| 3. | Branch Plenum, or Plenum Boot |
| 4. | Hanger Angles (2) 1-1/2x1-1/2x16 gauge |
| 5. | #6 Common Nails or #8 x1-1/4 Screws |
| 6. | Mounting Fasteners (Bolts, Screws, Rivets) |
| 7. | Steel Grille, Diffuser, or Drop Ducting |
| 8. | Ceiling: Gypsum Wallboard<br>Acoustical Tile or Acoustical Panel (Lay-In) |
| 9. | Joists, Trusses, Beams |
| 10. | Stabilizing Angles (2) 1/2x1-1/2x16Ga.x3" |
| 11. | Mounting Fasteners (Bolts, Screws, Rivets) |
| 12. | Optional Nailing Blocks 2x2 used with Straight Hanger Angles |

These ceiling dampers are Classified by Underwriters Laboratories, Inc. as to heat barriers in the Fire Resistance Directory under the category of Ceiling Dampers (CABS). Refer to the Classification information in the back of the Fire Resistance Directory regarding the use of these dampers in the various floor-ceiling or Roof-ceiling assemblies. Ceiling dampers and the associated components (surface mounted diffusers or grilles, ducts, etc.) which are to be constructed of steel, are installed in the ceiling to maintain the hourly ratings of the floor-ceiling or roof-ceiling assemblies which are rated 3 hours or less.

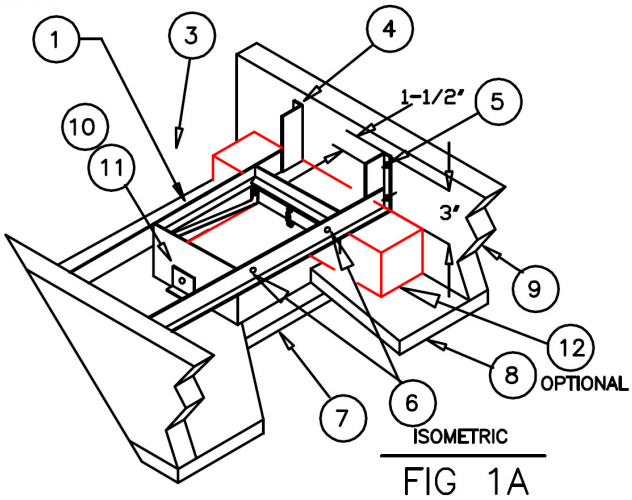


FIG 1A

231 Commerce Dr. Montgomeryville, PA 18936
Tel: 215-412-4445 Fax: 215-412-4409
Email: lloydind@firedamper.com

138 Industrial Loop West, Orange Park, FL 32073
Tel: 904-541-1655 Fax: 904-541-1657
Email: lloydind1@firedamper.com

B1, 4/F., Luen Ming Hing Factory Building
36 Mok Cheong St.,
To Kwa Wan, Kowloon, H. K.
Tel: 852-2760-4188 Fax: 852-2760-4177
Email: tatanlexyim@lloydasia.com

Website: www.firedamper.com

*ALL STATED SPECIFICATIONS ARE SUBJECT TO UPDATE WITHOUT NOTICE OR OBLIGATION.



Lloyd Industries Inc. 2017

# CEILING INSTALLATION INSTRUCTION

General Installation Instructions
Model 45-LT

INSTALLATION INSTRUCTIONS:

1. Before installing the damper, Model 45 LT open the blades and hook the fusible link over the link catch on the opposite blade. Bend down the link catch to secure the link in position.
2. Measure the actual spacing between the joists or other structural members. Allowing for a 3.00" flange at each mounting point. Cut and bend the angles on both ends to 90 degrees. or the appropriate angle required. Mounting angles are fastened to joists or other structural members with a minimum of two fasteners for each mounting point using #6 common nails or #8 x 1-1/4" long screws.
3. Model 45 LT are connected to the mounting angles with sheet metal screws, rivets, or bolts. Two connections on each angle as a minimum. Note: fastener positions must not interfere with the damper blade operation.
4. Model 45 LT connected to the stabilizing angles with sheet metal screws, rivets, or bolts. One connection on each angle as a minimum. The stabilizing angles are to be mounted with one face of the angle flush to the ceiling material. Note: fastener positions must not interfere with the damper blade operation.
5. The installation mounting position of the closed damper blade face must not exceed 2-5/8" from the face of the rated barrier.
6. Install the ceiling damper in the duct drop using 3/16 inch diameter by 1/2 inch long steel bolts, No. 8 by 1/2 inch steel sheet metal screws or 3/16 inch diameter by 1/2 inch long steel bolts, No. 8 by 1/2 inch steel sheet metal screws or 3/16 inch diameter steel rivets at 6 inches o.c. and a minimum of (3) places. For flexible ducting; connect with draw clamps, #16 SWG wire, or cable ties as per SMACMA Standards requirements.
7. The clearance between each side of the ceiling damper and the duct drop shall be 1/8 inch maximum.
8. The maximum size of Model 45 LT (rectangle) is 14" W x 14" H.
9. Steel/Alum. grille or diffuser to be attached to the duct drop or ceiling damper using No. 8 by 1-1/2 inch lg.sheet metal screws.

231 Commerce Dr. Montgomeryville, PA 18936
Tel: 215-412-4445 Fax: 215-412-4409
Email: lloydind@firedamper.com

138 Industrial Loop West, Orange Park, FL 32073
Tel: 904-541-1655 Fax: 904-541-1657
Email: lloydind1@firedamper.com

B1, 4/F., Luen Ming Hing Factory Building
36 Mok Cheong St.,
To Kwa Wan, Kowloon, H. K.
Tel: 852-2760-4188 Fax: 852-2760-4177
Email: tatanlexyim@lloydasia.com

Website: www.firedamper.com

*ALL STATED SPECIFICATIONS ARE SUBJECT TO UPDATE WITHOUT NOTICE OR OBLIGATION.



Lloyd Industries Inc. 2017

# DROP CEILING INSTALLATION INSTRUCTION

Model: CRD45-LTD Thin Line (Rectangular and Horizontal)
For Flush Mount Grilles

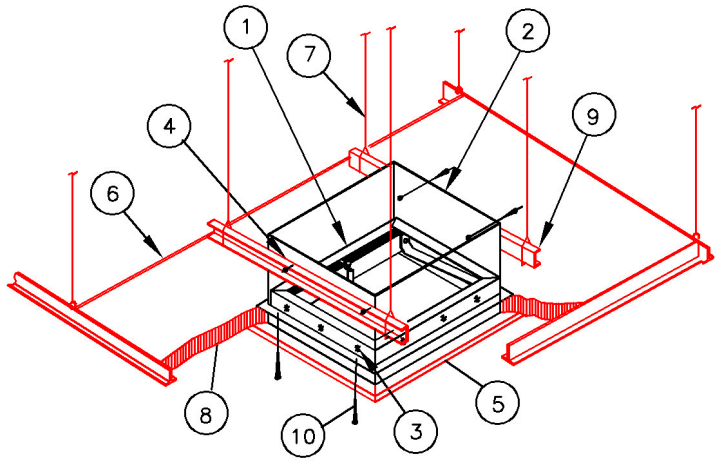


| ITEM | DESCRIPTION |
|---|---|
| 1. | Ceiling Radiation damper (Flush Mount) |
| 2. | Flanged sleeve (22 Ga. Min.) |
| 3. | (8) Factory spot welds (8) Min. |
| 4. | Channel Fasteners (2 each side min.) |
| 5. | Flush mount grille (20 gauge steel min.) |
| 6. | Ceiling grid (UL Classified) |
| 7. | 12 gauge steel wire |
| 8. | Ceiling material (UL classified) |
| 9. | Support channel (2 required min.) |
| 10. | Flush mount grille fasteners (4 PLCS) |

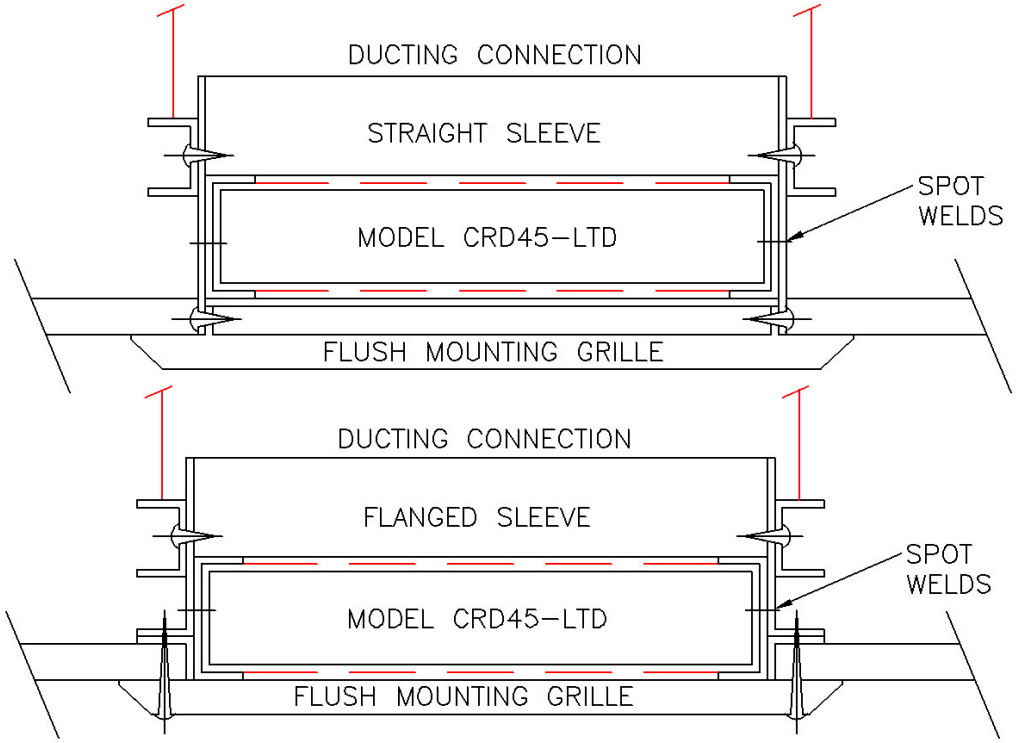


Note: fasteners & other hardware must not interfere with dampers .
Verify damper operation & complete damper closure after installations.

**Rectangular ceiling damper size limitations**

| Maximum Size | Maximum width | Maximum length | Minimum width | Minimum length |
|---|---|---|---|---|
| 196 SQ.IN. | 14” | 14” | 4” | 4” |

231 Commerce Dr. Montgomeryville, PA 18936
Tel: 215-412-4445 Fax: 215-412-4409
Email: lloydind@firedamper.com

138 Industrial Loop West, Orange Park, FL 32073
Tel: 904-541-1655 Fax: 904-541-1657
Email: lloydind1@firedamper.com

B1, 4/F., Luen Ming Hing Factory Building
36 Mok Cheong St.,
To Kwa Wan, Kowloon, H. K.
Tel: 852-2760-4188 Fax: 852-2760-4177
Email: tatanlexyim@lloydasia.com

Website: www.firedamper.com

*ALL STATED SPECIFICATIONS ARE SUBJECT TO UPDATE WITHOUT NOTICE OR OBLIGATION.



Lloyd Industries Inc. 2017

# LLOYD INDUSTRIES INC.

WWW.FIREDAMPER.COM

# DROP CEILING INSTALLATION INSTRUCTION

Model: CRD45-LTD Thin Line (Rectangular and Horizontal)
For Flush Mount Grilles

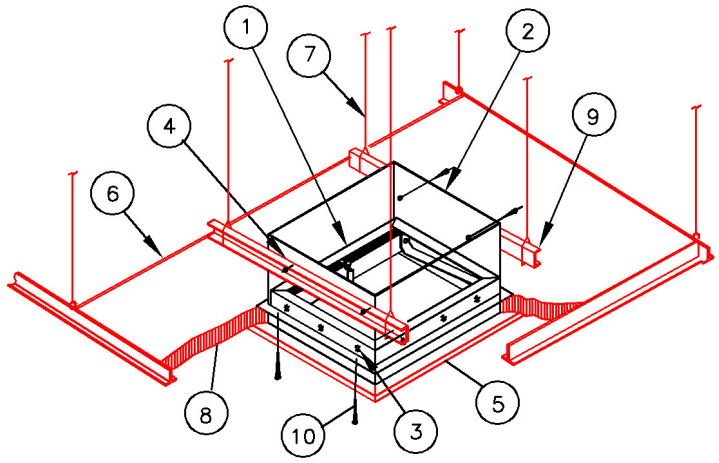


| ITEM | DESCRIPTION |
|---|---|
| 1. | Ceiling Radiation damper (Flush Mount) |
| 2. | Flanged sleeve (22 Ga. Min.) |
| 3. | (8) Factory spot welds (8) Min. |
| 4. | Channel Fasteners (2 each side min.) |
| 5. | Flush mount grille (20 gauge steel min.) |
| 6. | Ceiling grid (UL Classified) |
| 7. | 12 gauge steel wire |
| 8. | Ceiling material (UL classified) |
| 9. | Support channel (2 required min.) |
| 10. | Flush mount grille fasteners (4 PLCS) |

These ceiling dampers are Classified by Underwriters Laboratories, Inc. as to heat barriers in the Fire Resistance Directory under the category of Ceiling Dampers (CABS). Refer to the Classification information in the back of the Fire Resistance Directory regarding the use of these dampers in the various floor-ceiling or roof-ceiling assembles. Ceiling dampers and the associated components (surface mounted diffusers or grilles, ducts, etc.) which are to be constructed of steel, are installed in the ceiling to maintain the CRD-45-LTD 2" "thinline" damper and spot welded flanged sleeve provide for flush mounting ceiling grilles. Fasten the damper sleeve to support channels made of 16 MSG by 1-1/2 channel using 3/16" Dia x 1/2" lg steel bolts, #8 x 1/2" lg steel sheet metal screws, or 3/16" Dia steel rivets. Use 2 fasteners on each channel. Fasten support channels to the damper sleeve and not through the ceiling radiation damper frame.

The damper assembly shall be hung with 12 SWG minimum hanger wires at each of the support channel ends. All hanger wires shall be supported directly from the structural members of the floor or roof by vertical (not diagonal) hanger wires. Cold-rolled channels shall be used as required to insure that the grid and damper are supported from the structural members by vertical hanger wires (not diagonal). The flange on the surface mounted diffuser at the ceiling membrane level shall provide a minimum 1 inch support for the ceiling panels. Size of hole cut in the panel for passage of the duct drop shall be no more than 1/8 inch. larger than opening for the damper.

When cutting of a main runner or cross tee is needed, a 1/2 inch clearance must be maintained between the cut end of the main runner or cross tee and the damper. A 12 SWG hanger wire shall be installed near each end of the cut main runner or cross tee. No more than one main runner or cross tee may be cut.

The surface mounted grille shall be attached to the damper sleeve flange, not through the damper frame.

The steel diffusers shall be attached to the damper sleeve with No. 8 sheet metal screws, 3/16" diameter steel rivets, or 3/16 inch diameter by half inch long steel bolts.

Note: Fasteners & other hardware must not interfere with dampers .
Verify damper operation & complete damper closure after installations.

**Rectangular ceiling damper size limitations**

| Maximum Size | Maximum width | Maximum length | Minimum width | Minimum length |
|---|---|---|---|---|
| 196 SQ.IN. | 14” | 14” | 4” | 4” |

231 Commerce Dr. Montgomeryville, PA 18936
Tel: 215-412-4445 Fax: 215-412-4409
Email: lloydind@firedamper.com

138 Industrial Loop West, Orange Park, FL 32073
Tel: 904-541-1655 Fax: 904-541-1657
Email: lloydind1@firedamper.com

B1, 4/F., Luen Ming Hing Factory Building
36 Mok Cheong St.,
To Kwa Wan, Kowloon, H. K.
Tel: 852-2760-4188 Fax: 852-2760-4177
Email: tatanlexyim@lloydasia.com

Website: www.firedamper.com

*ALL STATED SPECIFICATIONS ARE SUBJECT TO UPDATE WITHOUT NOTICE OR OBLIGATION.



Lloyd Industries Inc. 2017

# LLOYD INDUSTRIES INC.

WWW.FIREDAMPER.COM

# DUCT DROP CEILING INSTALLATION INSTRUCTION

Model: CRD45-LTD Thin Line (Rectangular and Horizontal)
For Drop Duct

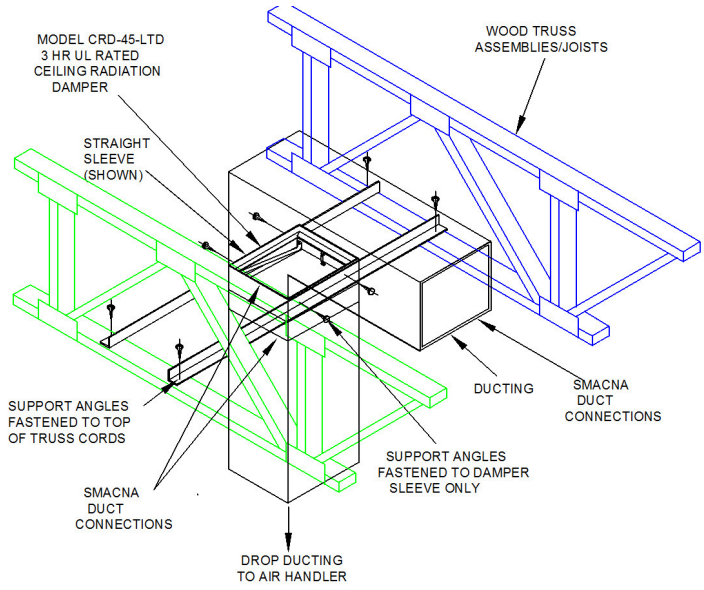


| ITEM | DESCRIPTION |
|---|---|
| 1. | Ceiling Radiation damper |
| 2. | Straight sleeve (22 Ga.) (Shown)<br>Optional: Flanged sleeve (see below) |
| 3. | Factory spot welds (sleeve to damper) (8) Min. |
| 4. | Support angles (2) min.<br>Optional: “S” drive boot clips (2) Min.<br>Use with flanged sleeves. |
| 5. | Fasteners: support angles to sleeves |
| 6. | Fasteners: support angles to truss cords<br>Optional: Boot clips to truss cords |
| 7. | Wood trusses/ joists |
| 8. | Ceiling materials: Gypsum/RC channel |
| 9. | Drop ducting |

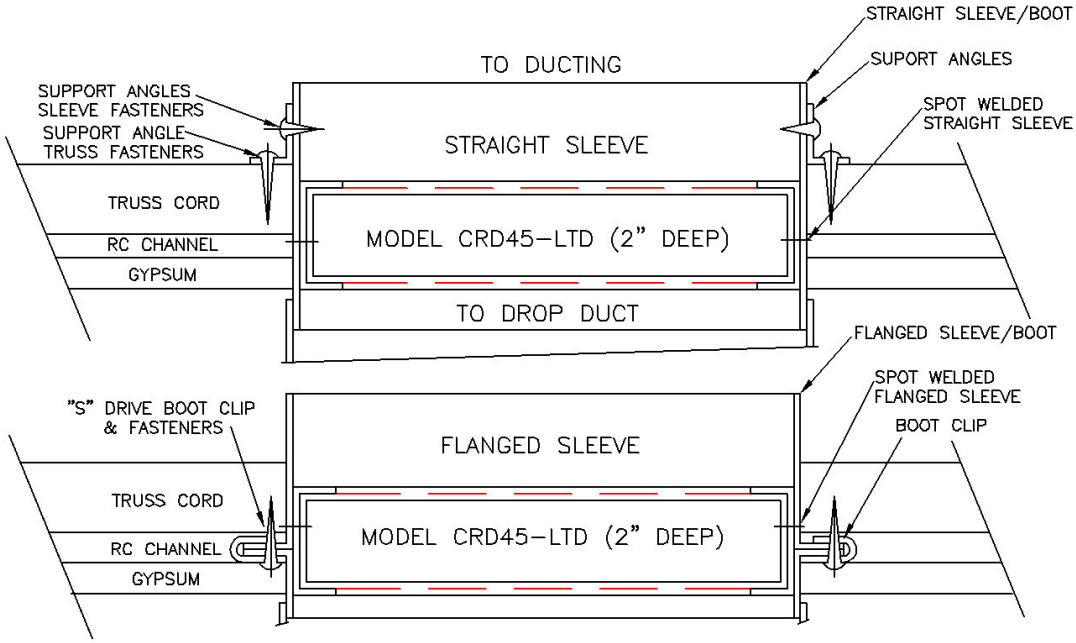


Note: Fasteners & other hardware must not interfere with dampers .
Verify damper operation & complete damper closure after installations.

**Rectangular ceiling damper size limitations**

| Maximum Size | Maximum width | Maximum length | Minimum width | Minimum length |
|---|---|---|---|---|
| 196 SQ.IN. | 14” | 14” | 4” | 4” |

231 Commerce Dr. Montgomeryville, PA 18936
Tel: 215-412-4445 Fax: 215-412-4409
Email: lloydind@firedamper.com

138 Industrial Loop West, Orange Park, FL 32073
Tel: 904-541-1655 Fax: 904-541-1657
Email: lloydind1@firedamper.com

B1, 4/F., Luen Ming Hing Factory Building
36 Mok Cheong St.,
To Kwa Wan, Kowloon, H. K.
Tel: 852-2760-4188 Fax: 852-2760-4177
Email: tatanlexyim@lloydasia.com

Website: www.firedamper.com

*ALL STATED SPECIFICATIONS ARE SUBJECT TO UPDATE WITHOUT NOTICE OR OBLIGATION.



Lloyd Industries Inc. 2017

# DROP CEILING INSTALLATION INSTRUCTION

Model: CRD45-LTD Thin Line (Rectangular and Horizontal)
For Registers & Grilles

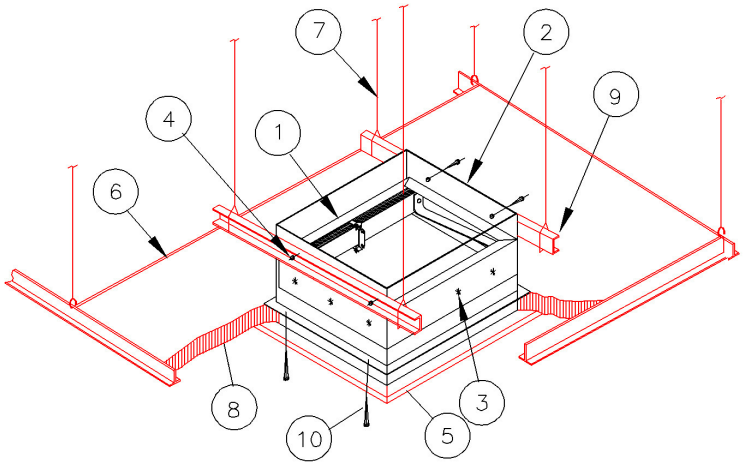


| ITEM | DESCRIPTION |
|---|---|
| 1. | Ceiling Radiation damper (Register) |
| 2. | Flanged sleeve (22 Ga. Min.) |
| 3. | (8) Factory spot welds (8) Min. |
| 4. | Channel Fasteners (2 each side min.) |
| 5. | Register/Grille (20 gauge steel min.) |
| 6. | Ceiling grid (UL Classified) |
| 7. | 12 gauge steel wire |
| 8. | Ceiling material (UL classified) |
| 9. | Support channel (2 required min.) |
| 10. | Flush mount grille fasteners (4 PLCS) |

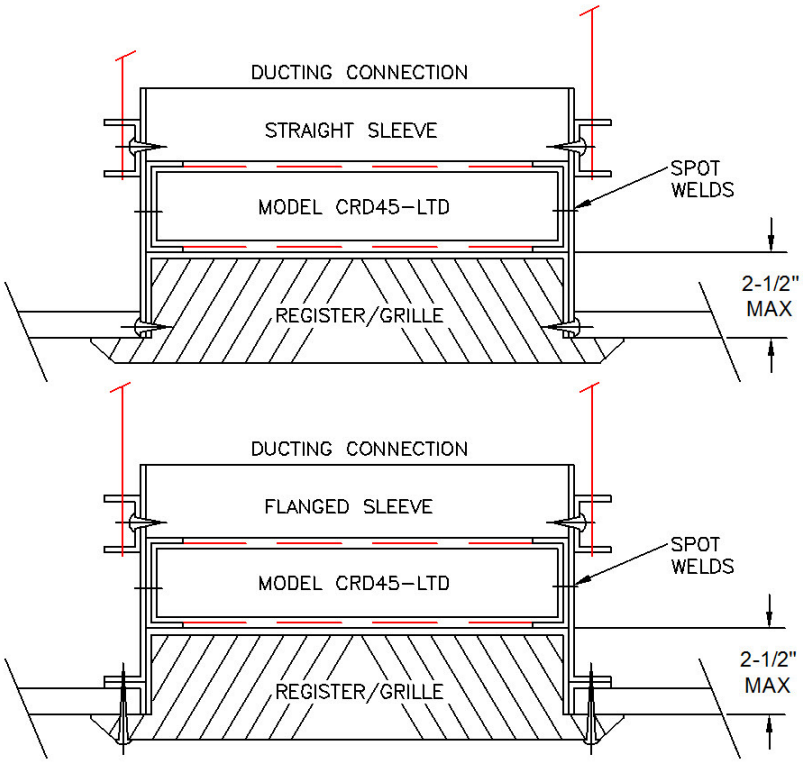


Note: fasteners & other hardware must not interfere with dampers .
Verify damper operation & complete damper closure after installations.

**Rectangular ceiling damper size limitations**

| Maximum Size | Maximum width | Maximum length | Minimum width | Minimum length |
|---|---|---|---|---|
| 196 SQ.IN. | 14” | 14” | 4” | 4” |

231 Commerce Dr. Montgomeryville, PA 18936
Tel: 215-412-4445 Fax: 215-412-4409
Email: lloydind@firedamper.com

138 Industrial Loop West, Orange Park, FL 32073
Tel: 904-541-1655 Fax: 904-541-1657
Email: lloydind1@firedamper.com

B1, 4/F., Luen Ming Hing Factory Building
36 Mok Cheong St.,
To Kwa Wan, Kowloon, H. K.
Tel: 852-2760-4188 Fax: 852-2760-4177
Email: tatanlexyim@lloydasia.com

Website: www.firedamper.com

*ALL STATED SPECIFICATIONS ARE SUBJECT TO UPDATE WITHOUT NOTICE OR OBLIGATION.



Lloyd Industries Inc. 2017

# LLOYD INDUSTRIES INC.

WWW.FIREDAMPER.COM

# DROP CEILING INSTALLATION INSTRUCTION

Model: CRD45-LTD Thin Line (Rectangular and Horizontal)
For Registers & Grills

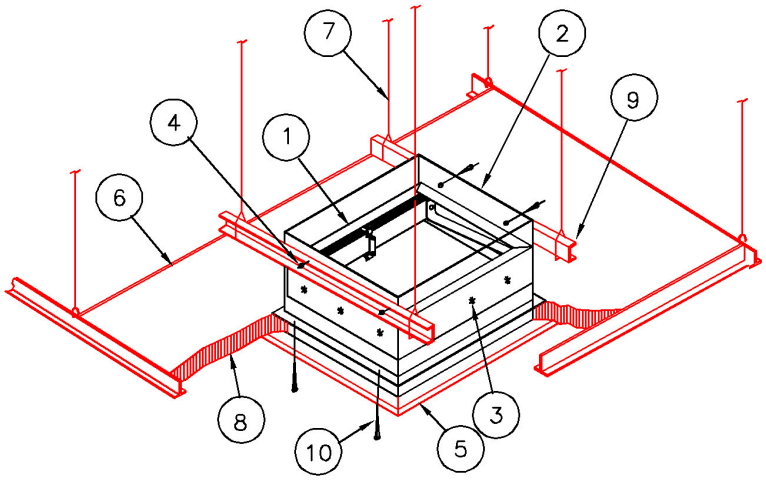


| ITEM | DESCRIPTION |
|---|---|
| 1. | Ceiling Radiation damper (Registers) |
| 2. | Flanged sleeve (22 Ga. Min.) |
| 3. | (8) Factory spot welds (8) Min. |
| 4. | Channel Fasteners (2 each side min.) |
| 5. | Register/ Grille (20 gauge steel min.) |
| 6. | Ceiling grid (UL Classified) |
| 7. | 12 gauge steel wire |
| 8. | Ceiling material (UL classified) |
| 9. | Support channel (2 required min.) |
| 10. | Register/Grille fasteners (4 PLCS) |

These ceiling dampers are Classified by Underwriters Laboratories, Inc. as to heat barriers in the Fire Resistance Directory under the category of Ceiling Dampers (CABS). Refer to the Classification information in the back of the Fire Resistance Directory regarding the use of these dampers in the various floor-ceiling or roof-ceiling assembles. Ceiling dampers and the associated components (surface mounted diffusers or grilles, ducts, etc.) which are to be constructed of steel, are installed in the ceiling to maintain the CRD-45-LTD 2" "thinline" damper and spot welded flanged sleeve provide for flush mounting ceiling grilles. Fasten the damper sleeve to support channels made of 16 MSG by 1-1/2 channel using 3/16" Dia x 1/2" lg steel bolts, #8 x 1/2" lg steel sheet metal screws, or 3/16" Dia steel rivets. Use 2 fasteners on each channel. Fasten support channels to the damper sleeve and not through the ceiling radiation damper frame.

The damper assembly shall be hung with 12 SWG minimum hanger wires at each of the support channel ends. All hanger wires shall be supported directly from the structural members of the floor or roof by vertical (not diagonal) hanger wires. Cold-rolled channels shall be used as required to insure that the grid and damper are supported from the structural members by vertical hanger wires (not diagonal). The flange on the surface mounted diffuser at the ceiling membrane level shall provide a minimum 1 inch support for the ceiling panels. Size of hole cut in the panel for passage of the duct drop shall be no more than 1/8 inch. larger than opening for the damper.
When cutting of a main runner or cross tee is needed, a 1/2 inch clearance must be maintained between the cut end of the main runner or cross tee and the damper. A 12 SWG hanger wire shall be installed near each end of the cut main runner or cross tee. No more than one main runner or cross tee may be cut.

The surface mounted grille shall be attached to the damper sleeve flange, and not through the damper frame.
The steel diffusers shall be attached to the damper sleeve with No. 8 sheet metal screws, 3/16" diameter steel rivets, or 3/16 inch diameter by half inch long steel bolts.

Note: fasteners & other hardware must not interfere with dampers .
Verify damper operation & complete damper closure after installations.

**Rectangular ceiling damper size limitations**

| Maximum Size | Maximum width | Maximum length | Minimum width | Minimum length |
|---|---|---|---|---|
| 196 SQ.IN. | 14” | 14” | 4” | 4” |

231 Commerce Dr. Montgomeryville, PA 18936
Tel: 215-412-4445 Fax: 215-412-4409
Email: lloydind@firedamper.com

138 Industrial Loop West, Orange Park, FL 32073
Tel: 904-541-1655 Fax: 904-541-1657
Email: lloydind1@firedamper.com

B1, 4/F., Luen Ming Hing Factory Building
36 Mok Cheong St.,
To Kwa Wan, Kowloon, H. K.
Tel: 852-2760-4188 Fax: 852-2760-4177
Email: tatanlexyim@lloydasia.com

Website: www.firedamper.com

*ALL STATED SPECIFICATIONS ARE SUBJECT TO UPDATE WITHOUT NOTICE OR OBLIGATION.



Lloyd Industries Inc. 2017

# INSTALLATION INSTRUCTION

Model: CRD50-4X &CRD50-6X (Rectangular)
Partition ratings of 3hours or less
Ducted Supply or Return

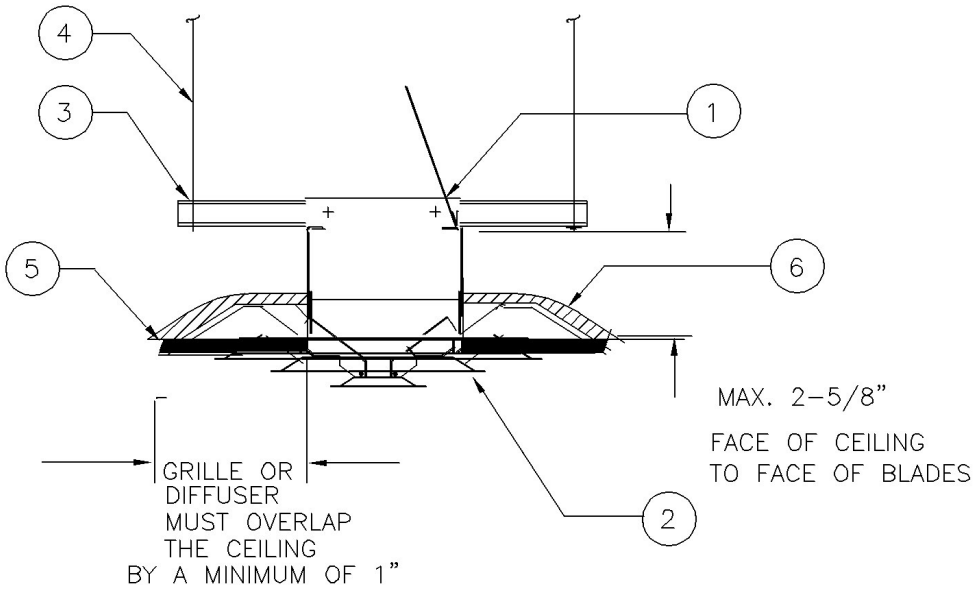


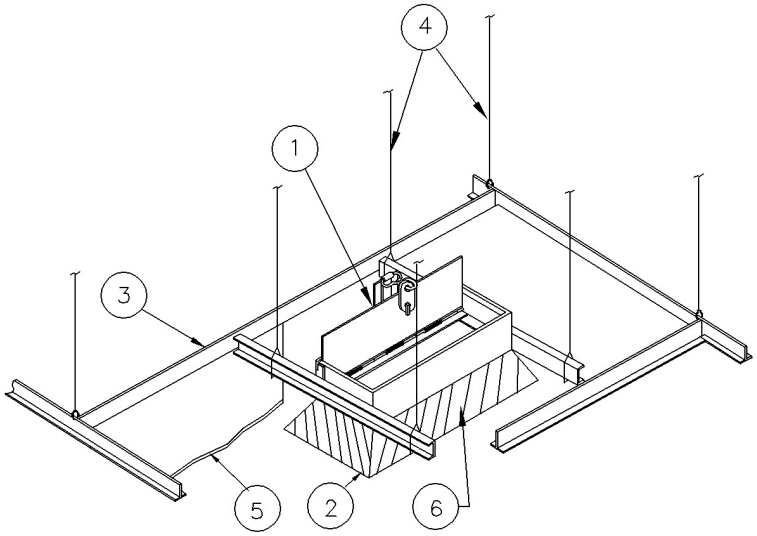


| ITEM | DESCRIPTION |
|---|---|
| 1. | 3 hour rated model CRD50-4X & CRD50-6X (Rectangular) ceiling radiation damper |
| 2. | Steel duct drop sleeve (less #3 plenum permitted) |
| 3. | Branch duct plenum |
| 4. | 12 SWG hanger wires (4) MIN Reqd. |
| 5. | Steel support channels |
| 6. | Thermal blanket |

Note: fasteners & other hardware must not interfere with dampers .
Verify damper operation & complete damper closure after installations.

**Rectangular ceiling damper size limitations (Maximum 288 SQ/IN.)**

| Model | Maximum width | Maximum length | Minimum width | Minimum length |
|---|---|---|---|---|
| CRD50-4X | 4" | 24" | 4" | 4" |
| CRD50-6X | 6" | 24" | 6" | 6" |

231 Commerce Dr. Montgomeryville, PA 18936
Tel: 215-412-4445 Fax: 215-412-4409
Email: lloydind@firedamper.com

138 Industrial Loop West, Orange Park, FL 32073
Tel: 904-541-1655 Fax: 904-541-1657
Email: lloydind1@firedamper.com

B1, 4/F., Luen Ming Hing Factory Building
36 Mok Cheong St.,
To Kwa Wan, Kowloon, H. K.
Tel: 852-2760-4188 Fax: 852-2760-4177
Email: tatanlexyim@lloydasia.com

Website: www.firedamper.com

*ALL STATED SPECIFICATIONS ARE SUBJECT TO UPDATE WITHOUT NOTICE OR OBLIGATION.



Lloyd Industries Inc. 2017

# INSTALLATION INSTRUCTION

Model: CRD50-4X &CRD50-6X (Rectangular)
Partition ratings of 3hours or less
Ducted Supply or Return

1. Before installing dampers:
   Model CRD50-4X & CRD50-6X (rectangular), open blade and hook the fusible link over the "S" hook bracket and the fusible link blade hook.
2. Support the damper with (2) 16 Ga. cold-rolled steel support channels, 1-1/2 or 2 inches deep with 1/2 inch flanges. Place the support channels at the top of the damper adjacent to both sides of the damper. Use 12 SWG galvanized steel hanger wire to independently support channels on each end, from the structural members of the floor or roof above. Use fasteners specified in line item #3 to secure channel to damper. Refer to line item #7 for locations. All hanger wires shall be supported directly from the structural members of the floor or the roof by vertical (not diagonal) hanger wires. Cold-rolled channels shall be used as required to insure that the grid and damper are supported from the structural members by vertical hanger wires (not diagonal).
3. Fasten the ceiling damper to channels using 3/16 inch diameter by 1/2 inch long steel bolts, No. 8 by 1/2 inch steel sheet metal screws or 3/16 inch diameter by 1/2 inch long steel bolts, No. 8 by 1/2 inch steel sheet metal screws, 3/16 inch diameter steel rivets or spot welds at 6 inches on center maximum and a minimum of (3) places. Pre-assembly of ceiling radiation dampers to channels is permitted using the listed fastening methods.
4. The clearance between each side of the ceiling damper and lay-in panel shall be 1/8 inch maximum.
5. Damper outlets in lay-in ceilings should be field located in an acoustical ceiling panel or tile. Where it is necessary to cut a main runner or cross tee, each cut end shall be supported by a vertical 12 gauge hanger wire. A 1/2 inch clearance shall be maintained between the duct outlet and each cut end of main runner or cross tee. The duct outlet shall be located so that no more than one main runner or cross tee is cut when penetrating the ceiling membrane.
6. Steel grille or diffuser to be attached to the duct drop or ceiling damper using No. 8 by 1-1/2 inch long sheet metal screws, 3/16 tubular rivets, or 1/4 tack welds .
7. Fastener positions must not interfere with damper blade operation.

231 Commerce Dr. Montgomeryville, PA 18936
Tel: 215-412-4445 Fax: 215-412-4409
Email: lloydind@firedamper.com

138 Industrial Loop West, Orange Park, FL 32073
Tel: 904-541-1655 Fax: 904-541-1657
Email: lloydind1@firedamper.com

B1, 4/F., Luen Ming Hing Factory Building
36 Mok Cheong St.,
To Kwa Wan, Kowloon, H. K.
Tel: 852-2760-4188 Fax: 852-2760-4177
Email: tatanlexyim@lloydasia.com

Website: www.firedamper.com

*ALL STATED SPECIFICATIONS ARE SUBJECT TO UPDATE WITHOUT NOTICE OR OBLIGATION.



Lloyd Industries Inc. 2017

# INSTALLATION INSTRUCTION

Model: CRD50-4X &CRD50-6X (Rectangular)
Partition ratings of 3hours or less
Non-Ducted Supply or Return

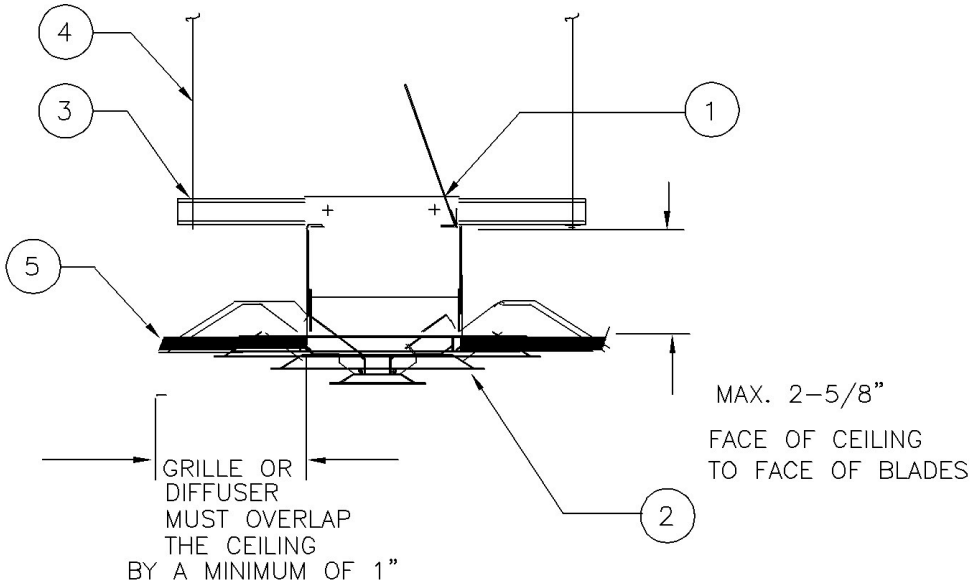


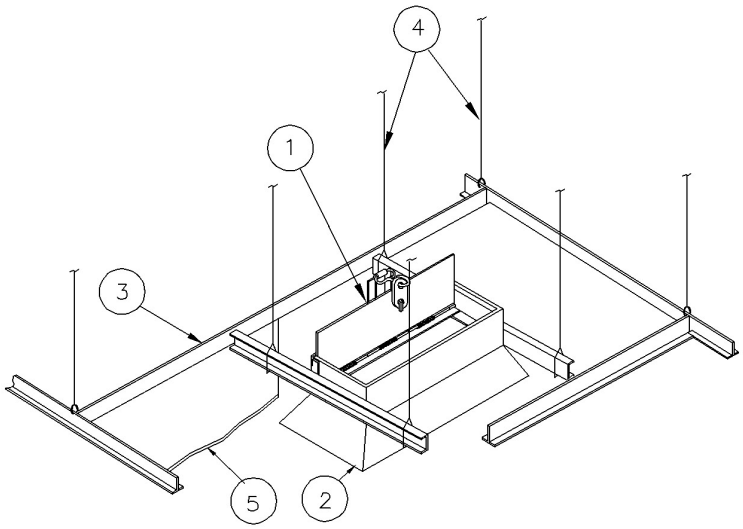


| ITEM | DESCRIPTION |
|---|---|
| 1. | 3 hour rated model CRD50-4X & CRD50-6X |
| 2. | Mounted steel grille or diffuser |
| 3. | Steel support channels |
| 4. | 12 SWG hanger wires (4) MIN Reqd. |
| 5. | Ceiling: Acoustical Panel/Tile (lay-In) |

Note: fasteners & other hardware must not interfere with dampers .
Verify damper operation & complete damper closure after installations.

**Rectangular ceiling damper size limitations (Maximum 288 SQ/IN.)**

| Model | Maximum width | Maximum length | Minimum width | Minimum length |
|---|---|---|---|---|
| CRD50-4X | 4" | 24" | 4" | 4" |
| CRD50-6X | 6" | 24" | 6" | 6" |

231 Commerce Dr. Montgomeryville, PA 18936
Tel: 215-412-4445 Fax: 215-412-4409
Email: lloydind@firedamper.com

138 Industrial Loop West, Orange Park, FL 32073
Tel: 904-541-1655 Fax: 904-541-1657
Email: lloydind1@firedamper.com

B1, 4/F., Luen Ming Hing Factory Building
36 Mok Cheong St.,
To Kwa Wan, Kowloon, H. K.
Tel: 852-2760-4188 Fax: 852-2760-4177
Email: tatanlexyim@lloydasia.com

Website: www.firedamper.com

*ALL STATED SPECIFICATIONS ARE SUBJECT TO UPDATE WITHOUT NOTICE OR OBLIGATION.



Lloyd Industries Inc. 2017

# INSTALLATION INSTRUCTION

Model: CRD50-4X &CRD50-6X (Rectangular)
Partition ratings of 3hours or less
Non-Ducted Supply or Return

1. Before installing dampers:
   Model CRD50-4X & CRD50-6X (rectangular), open blade and hook the fusible link over the "S" hook bracket and the fusible link blade hook.
2. Support the damper with (2) 16 Ga. cold-rolled steel support channels, 1-1/2 or 2 inches deep with 1/2 inch flanges. Place the support channels at the top of the damper adjacent to both sides of the damper. Use 12 SWG galvanized steel hanger wire to independently support channels on each end, from the structural members of the floor or roof above. Use fasteners specified in line item #3 to secure channel to damper. Refer to line item #7 for locations. All hanger wires shall be supported directly from the structural members of the floor or the roof by vertical (not diagonal) hanger wires. Cold-rolled channels shall be used as required to insure that the grid and damper are supported from the structural members by vertical hanger wires (not diagonal).
3. Fasten the ceiling damper to channels using 3/16 inch diameter by 1/2 inch long steel bolts, No. 8 by 1/2 inch steel sheet metal screws or 3/16 inch diameter by 1/2 inch long steel bolts, No. 8 by 1/2 inch steel sheet metal screws, 3/16 inch diameter steel rivets or spot welds at 6 inches on center maximum and a minimum of (3) places. Pre-assembly of ceiling radiation dampers to channels is permitted using the listed fastening methods.
4. The clearance between each side of the ceiling damper and lay-in panel shall be 1/8 inch maximum.
5. Damper outlets in lay-in ceilings should be field located in an acoustical ceiling panel or tile. Where it is necessary to cut a main runner or cross tee, each cut end shall be supported by a vertical 12 gauge hanger wire. A 1/2 inch clearance shall be maintained between the duct outlet and each cut end of main runner or cross tee. The duct outlet shall be located so that no more than one main runner or cross tee is cut when penetrating the ceiling membrane.
6. Steel grille or diffuser to be attached to the duct drop or ceiling damper using No. 8 by 1-1/2 inch long sheet metal screws, 3/16 tubular rivets, or 1/4 tack welds .
7. Fastener positions must not interfere with damper blade operation.

231 Commerce Dr. Montgomeryville, PA 18936
Tel: 215-412-4445 Fax: 215-412-4409
Email: lloydind@firedamper.com

138 Industrial Loop West, Orange Park, FL 32073
Tel: 904-541-1655 Fax: 904-541-1657
Email: lloydind1@firedamper.com

B1, 4/F., Luen Ming Hing Factory Building
36 Mok Cheong St.,
To Kwa Wan, Kowloon, H. K.
Tel: 852-2760-4188 Fax: 852-2760-4177
Email: tatanlexyim@lloydasia.com

Website: www.firedamper.com

*ALL STATED SPECIFICATIONS ARE SUBJECT TO UPDATE WITHOUT NOTICE OR OBLIGATION.



Lloyd Industries Inc. 2017

# CEILING RADIATION DAMPER ASSEMBLY WITH BOOT AND COLLAR

## TRUSS/GYPSUM INSTALLATION INSTRUCTIONS

MODEL CRD 50-BT & CRD 50-EA-BT: RECTANGLE CRD / SIDE OR TOP OUTLET RECTANGULAR BOOT/ ASM.FOR REGISTERS
MODEL CRD 50-BT & CRD 50-EA-BT: RECTANGLE CRD / SIDE OR TOP OUTLET RECTANGULAR BOOT/ ASM. FOR DROP DUCT
MODEL CRD 50-95-BT & CRD 50-EA-95-BT/RECTANGLE CRD / 90° BOOT/ FOR REGISTERS
MODEL CRD 50-95-BT & CRD 50-EA-95-BT/RECTANGLE CRD / 90° BOOT/ FOR DROP DUCT
MODEL 45-CRD-LT-BT & MODEL 45-CRD-LTD-BT / 90° BOOT/ FOR DROP DUCT & REGISTERS

1 HOUR RATED REGISTER GRILL ASSEMBLY CRD/PLENUM BOX ASSEMBLY FOR
FLOOR/CEILING, ROOF/CEILING: WOOD TRUSS ASSEMBLIES

UL DESIGN L528, L588, L562, L563, L574, L585, P533, P544, P545 and P547 types.

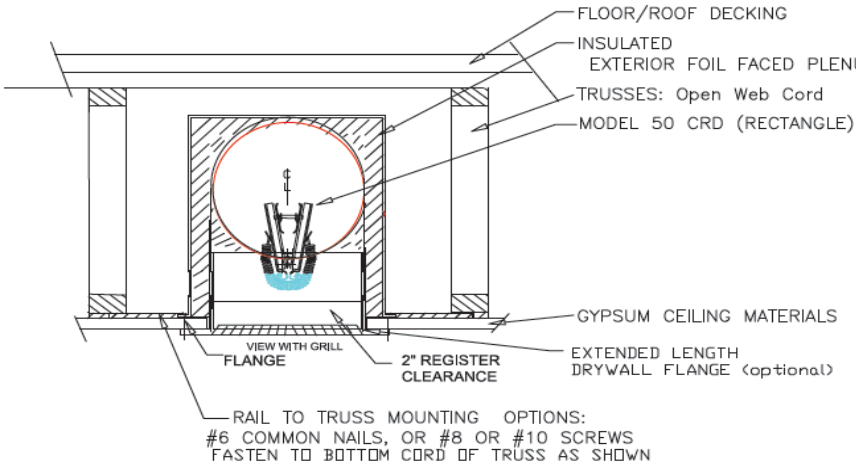


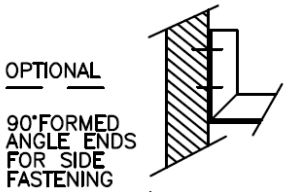


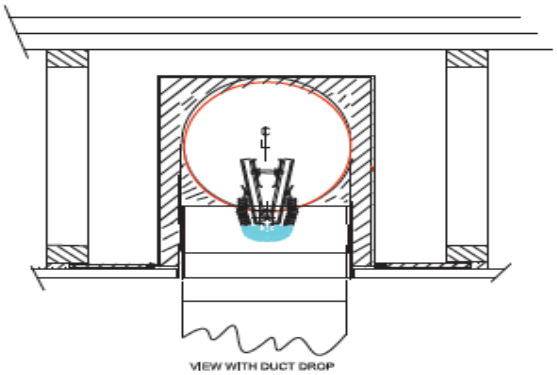


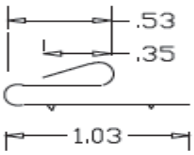


Dimensioning per Industry standard tolerancing



As an alternate to Hanger Angles, two standard 28 GA min.steel boot rails shown above are snapped onto opposite sides of damper box flange. (see note 2 and 4)

**NOTES:**

- Before installing the damper assembly, CRD50-BT, CRD50-EA-BT, CRD50-95-BT,and CRD50-EA-95-BT, open the blades and hook the fusible link over the link catch on the opposite blade. Bend down the link catch to secure the link in position. For CRD Model 50-95EA-BT flex the spring wire and secure the link.
- Measure the actual truss centers and add approx. 6" to determine straight rail lengths. (2 required per box) For Angle Mount only. When using the optional formed Boot Rail allow for adequate flanges at each mounting, and span the truss cavity to overlap face of truss bottom cords min. of 2-1/2 in.
- Establish the location of the gypsum flange and snap the (2) hanger rails to the plenum box.
- Mounting rails are fastened to trusses with a minimum of two fasteners for each mounting point using #6 common nails or #8 or #10 wood screws.
- The clearance between each side of the ceiling damper and the duct drop shall be 1/16 in. for a total of 1/8 inch maximum.
- Steel grille to be attached to the ceiling damper using No.8 by 2 inch long sheet metal screws at each end of grill for a total of 2 screws.

*Important: Fasteners must not interfere with the damper blades operation.

231 Commerce Dr. Montgomeryville, PA 18936
Tel: 215-412-4445 Fax: 215-412-4409
Email: lloydind@firedamper.com

138 Industrial Loop West, Orange Park, FL 32073
Tel: 904-541-1655 Fax: 904-541-1657
Email: lloydind1@firedamper.com

B1, 4/F., Luen Ming Hing Factory Building
36 Mok Cheong St.,
To Kwa Wan, Kowloon, H. K.
Tel: 852-2760-4188 Fax: 852-2760-4177
Email: tatanlexyim@lloydasia.com

Website: www.firedamper.com

*ALL STATED SPECIFICATIONS ARE SUBJECT TO UPDATE WITHOUT NOTICE OR OBLIGATION.



Lloyd Industries Inc. 2017

# CEILING RADIATION DAMPERS

## APPLICATION SHEET

## MODEL CRD-55 and CRD-55-EA (ROUND)

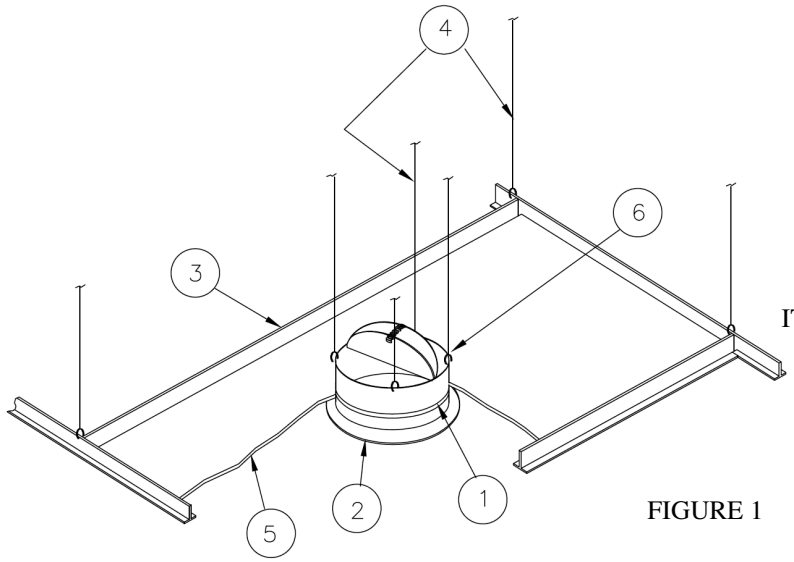


FIGURE 1

**NOTE:**

Figure 1– Application sheet shows ceiling plenum with non-ducted supply or return. See installation instructions (Figure 1A) for support channel method of installation used for ducted supply or return.

ITEM

1. DAMPER
2. GRILLE FRAME (20 GAUGE MINIMUM)
3. CEILING GRID (UL CLASSIFIED)
4. 12 GAUGE STEEL WIRE
5. CEILING MATERIAL (UL CLASSIFIED)
6. HANGER STRAP

These ceiling dampers are Classified by Underwriters Laboratories, Inc. as to heat barriers in the Fire Resistance Directory under the category of Ceiling Dampers (CABS). Refer to the classification information in the back of the Fire Resistance Directory regarding the use of these dampers in the various floor-ceiling or roof-ceiling assemblies. Ceiling dampers and the associated components (surface mounted diffusers or grilles, ducts, etc.) which are to be constructed of steel, are installed in the ceiling to maintain the hourly ratings of the floor-ceiling or roof ceiling assemblies which are rated 3 hours or less.

The damper/surface mounted diffuser shall be installed as shown on the installation sheet. The damper shall be installed as shown on the installation sheet. 12 SWG hanger wires, minimum of 3 wires are to be used to support the round ceiling dampers.

Optional support method. The ceiling damper/ surface mounted diffuser assembly uses two #16 gauge cold-rolled steel support channels. The two 1-1/2 inch or 2 inch, No.16 gauge cold-rolled steel channels with 1/2 inch flanges, are to be attached to the top of the damper frame with 3/16" bolts of 3/8 inch minimum length. A minimum of two bolts per damper are required. Each channel is to be supported at each end by 12 SWG wire attached to the structural members.

All hanger wires shall be supported directly from the structural members of the floor or roof by vertical (not diagonal) hanger wires. Cold-rolled channels shall be used as required to insure that the grid and damper are supported from the structural members by vertical hanger wires (not diagonal).

The flange on the surface mounted diffuser at the ceiling membrane level shall provide a minimal 1 inch. Support for the ceiling panels. Size of hole cut in the panel for passage of the duct drop shall be no more than 1/8 inch larger than opening for the damper.

When cutting of a main runner or cross tee is needed, a 1/2 inch clearance must be maintained between the cut end of the main runner or cross tee and the damper. A 12 SWG hanger wire shall be installed near each end of the cut main runner or cross tee. No more than one main runner or cross tee may be cut when penetrating the ceiling membrane.

The steel diffusers shall be attached to the damper with No. 8 sheet metal screws, 3/16" tubular steel rivets, 3/16" diameter by 1/2 inch long steel bolts, or 1/4" tack welds. Minimum of three connections, 6 inches OC. A steel clamp or No. 16 SWG minimum steel wire shall fasten the flex air duct to the damper when flex air ducts are used to connect the main duct to the damper/diffuser assembly. The flex air duct shall be Class 0 or 1 and bear the UL listing Mark- refer to the UL "Gas and oil Equipment Directory". Maximum length of flexible air duct shall not exceed 14 ft- 0 in. length. The flexible air duct shall not rest on the back surface of the ceiling grid or panels and provide a min. of 4" clearance. The flexible air duct shall not interfere with the closing of the damper.

INSTALLATION INSTRUCTIONS AND THE PRODUCTS SPECIFIED, ARE IN CONFORMANCE TO ALL OF UNDERWRITERS LABORATORIES REQUIREMENTS 555C

**ROUND CEILING DAMPER SIZE LIMITATION**

| Maximum Size | Maximum Diameter | Minimum Diameter |
|---|---|---|
| 452 SQ.IN. | 24” | 4” |

231 Commerce Dr. Montgomeryville, PA 18936
Tel: 215-412-4445 Fax: 215-412-4409
Email: lloydind@firedamper.com

138 Industrial Loop West, Orange Park, FL 32073
Tel: 904-541-1655 Fax: 904-541-1657
Email: lloydind1@firedamper.com

B1, 4/F., Luen Ming Hing Factory Building
36 Mok Cheong St.,
To Kwa Wan, Kowloon, H. K.
Tel: 852-2760-4188 Fax: 852-2760-4177
Email: tatanlexyim@lloydasia.com

Website: www.firedamper.com

*ALL STATED SPECIFICATIONS ARE SUBJECT TO UPDATE WITHOUT NOTICE OR OBLIGATION.



Lloyd Industries Inc. 2017

# CEILING RADIATION DAMPERS

## INSTALLATION INSTRUCTIONS

## MODEL CRD-55 and CRD-55-EA (ROUND)

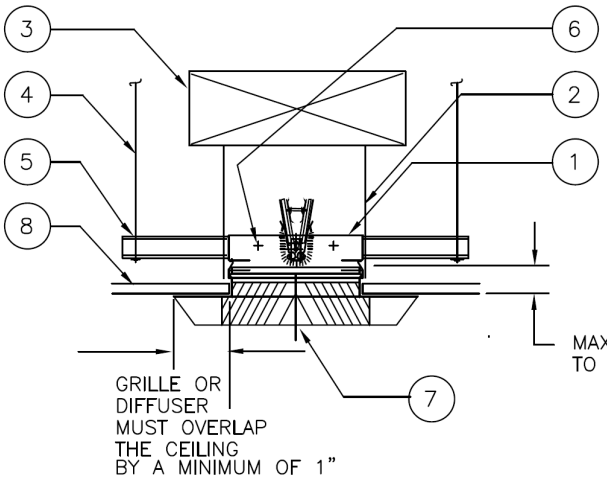


ITEM

1. MODEL 55 CRD (ROUND) CEILING RADIATION DAMPER
2. STEEL DUCT DROP
3. BRANCH DUCT
4. 12 SWG HANGER WIRES (4) MIN REQUIRED
5. STEEL SUPPORT CHANNELS
6. MOUNTING FASTENERS (BOLTS, SCREWS, RIVETS)
7. SURFACE MOUNTED STEEL GRILLE OR DIFFUSER
8. CEILING : ACOUSTICAL PANEL (LAY-IN) ACOUSTICAL TILE OR GYPSUM WALLBOARD

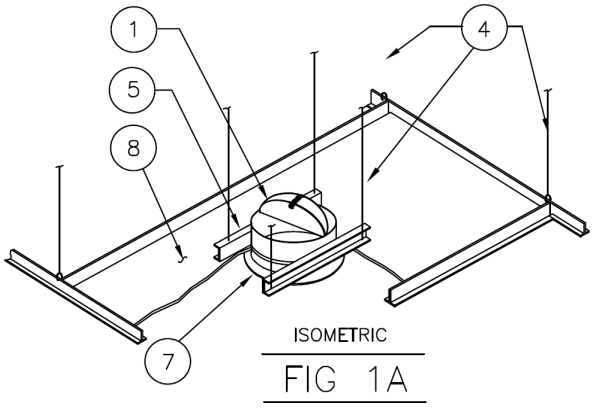


FIG 1A

These ceiling dampers are Classified by Underwriters Laboratories, Inc. as to heat barriers in the Fire Resistance Directory under the category of Ceiling Dampers (CABS). Refer to the Classification information in the back of the Fire Resistance Directory regarding the use of these dampers in the various floor / ceiling or Roof / ceiling assemblies. Ceiling dampers and the associated components (surface mounted diffusers or grilles, ducts, etc.) which are to be constructed of steel, are installed in the ceiling to maintain the hourly ratings of the floor-ceiling or roof-ceiling assemblies which are rated 3 hours or less.

**Notes:**

1. Before installing damper, Model 55 CRD (round), open blades and hook fusible link over link catch on opposite blade. Bend down link catch to secure link in position.

2. Support the duct with (2) 16 Ga. cold-rolled steel support channels, 1-1/2 or 2 inches deep with 1/2 inch flanges. Place the support channels at the bottom of the duct adjacent to both sides of the duct drop. Use 12 SWG galvanized steel hanger wire to independently support channels from the structural members of the floor or roof above. All hanger wires shall supported directly from the structural members of the floor or the roof by vertical (not diagonal) hanger wires. Cold-rolled channels shall be used as required to insure that the grid and damper are supported from the structural members by vertical hanger wires (not diagonal).

3. Install the ceiling damper in the duct drop using 3/16 inch diameter by 1/2 inch long steel bolts, No. 8 by 1/2 inch steel sheet metal screws or 3/16 inch diameter by 1/2 inch long steel bolts, No. 8 by 1/2 inch steel sheet metal screws or 3/16 inch diameter steel rivets at 6 inches o.c. and a minimum of (3) places.

4. The clearance between each side of the ceiling damper and the duct drop shall be 1/8 inch maximum.

5. Maximum size of Model 55 CRD (round) is 24 inches in diameter.

6. Duct outlets in lay-in ceilings should be field located in an acoustical ceiling panel or tile. Where it is necessary to cut a main runner or cross tee, each cut end shall be supported by a vertical 12 gauge hanger wire. A 1/2 inch clearance shall be maintained between the duct outlet and each cut end of main runner or cross tee. The duct outlet shall be located so that no more than one main runner or cross tee is cut when penetrating the ceiling membrane.

7. Steel grille or diffuser to be attached to the duct drop or ceiling damper using No. 8 by 1/2 inch long sheet metal screws at 6 inches o.c. and a minimum of (3) places.

CLASSIFIED C UL US

INSTALLATION INSTRUCTIONS AND THE PRODUCTS SPECIFIED, ARE IN CONFORMANCE TO ALL OF UNDERWRITERS LABORATORIES REQUIREMENTS 555C

**ROUND CEILING DAMPER SIZE LIMITATION**

| Maximum Size | Maximum Diameter | Minimum Diameter |
|---|---|---|
| 452 SQ.IN. | 24" | 4" |

231 Commerce Dr. Montgomeryville, PA 18936
Tel: 215-412-4445 Fax: 215-412-4409
Email: lloydind@firedamper.com

138 Industrial Loop West, Orange Park, FL 32073
Tel: 904-541-1655 Fax: 904-541-1657
Email: lloydind1@firedamper.com

B1, 4/F., Luen Ming Hing Factory Building
36 Mok Cheong St.,
To Kwa Wan, Kowloon, H. K.
Tel: 852-2760-4188 Fax: 852-2760-4177
Email: tatanlexyim@lloydasia.com

Website: www.firedamper.com

*ALL STATED SPECIFICATIONS ARE SUBJECT TO UPDATE WITHOUT NOTICE OR OBLIGATION.



Lloyd Industries Inc. 2017

# CEILING RADIATION DAMPERS

## APPLICATION SHEET

## MODEL CRD-50 and CRD-50-EA (RECTANGULAR)

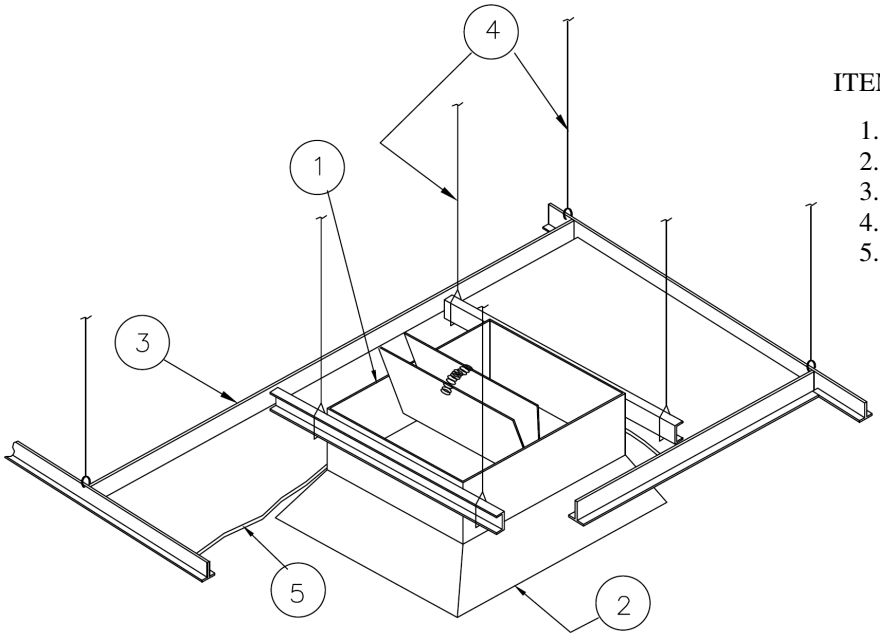


ITEM

1. DAMPER
2. GRILLE FRAME (20 GAUGE MINIMUM)
3. CEILING GRID (UL CLASSIFIED)
4. 12 GAUGE STEEL WIRE
5. CEILING MATERIAL (UL CLASSIFIED)

INSTALLATION INSTRUCTIONS AND THE PRODUCTS SPECIFIED, ARE IN CONFORMANCE TO ALL OF UNDERWRITERS LABORATORIES REQUIREMENTS 555C

These ceiling dampers are Classified by Underwriters Laboratories, Inc. as to heat barriers in the Fire Resistance Directory under the category of Ceiling Dampers (CABS). Refer to the Classification information in the back of the Fire Resistance Directory regarding the use of these dampers in the various floor-ceiling or roof-ceiling assembles. Ceiling dampers and the associated components (surface mounted diffusers or grilles, ducts, etc.) which are to be constructed of steel, are installed in the ceiling to maintain the hourly ratings of the floor-ceiling assemblies which are rated 3 hours or less.

The damper/surface mounted diffuser shall be installed as shown on installation sheet. The damper on the opposite sides shall be connected to support channels (16 MSG by 1-1/2 or 2 inch channel) with 3/16 inch diameter by 1/2 inch long steel bolts, No. 8 by 1/2 inch steel sheet metal screws or 3/16 inch diameter steel rivets at 6 inches OC minimum 3 per side.

The damper assembly shall be hung with 12 SWG minimum hanger wires at each of the channel ends. All hanger wires shall be supported directly from the structural members of the floor or roof by vertical (not diagonal) hanger wires. Cold-rolled channels shall be used as required to insure that the grid and damper are supported from the structural members by vertical hanger wires (not diagonal).

The flange on the surface mounted diffuser at the ceiling membranes level shall provide a minimum 1 inch. Support for the ceiling panels. Size of hole cut in the panel for passage of the duct drop shall be more than 1/8 inch. Larger than opening for the damper.

When cutting of a main runner or cross tee is needed, a 1/2 inch clearance must be maintained between the cut end of the main runner or cross tee and the damper. A 12 SWG hanger wire shall be installed near each end of the cut main runner or cross tee. No more than one main runner or cross tee may be cut when penetrating the ceiling membrane.

The steel diffusers shall be attached to the damper with No. 8 sheet metal screws, 3/16" tubular steel rivets, 3/16 inch diameter by half inch long steel bolts, or 1/4" tack welds. Minimum of three connections, 6 inches OC.

**RECTANGULAR CEILING DAMPER SIZE LIMITATION**

| Maximum Size | Maximum width | Maximum length | Minimum width | Minimum length |
|---|---|---|---|---|
| 576 SQ.IN. | 24” | 24” | 4” | 4” |

231 Commerce Dr. Montgomeryville, PA 18936
Tel: 215-412-4445 Fax: 215-412-4409
Email: lloydind@firedamper.com

138 Industrial Loop West, Orange Park, FL 32073
Tel: 904-541-1655 Fax: 904-541-1657
Email: lloydind1@firedamper.com

B1, 4/F., Luen Ming Hing Factory Building
36 Mok Cheong St.,
To Kwa Wan, Kowloon, H. K.
Tel: 852-2760-4188 Fax: 852-2760-4177
Email: tatanlexyim@lloydasia.com

Website: www.firedamper.com

*ALL STATED SPECIFICATIONS ARE SUBJECT TO UPDATE WITHOUT NOTICE OR OBLIGATION.



Lloyd Industries Inc. 2017

# CEILING RADIATION DAMPERS

## INSTALLATION INSTRUCTIONS

## MODEL CRD-50 and CRD-50-EA (RECTANGULAR)

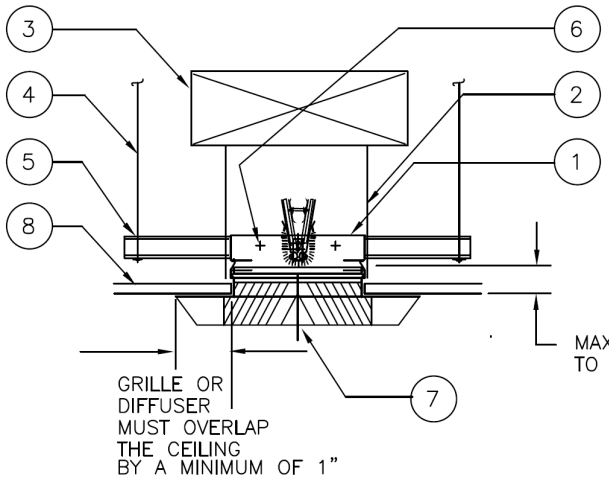


ITEM

1. MODEL 50 CRD (RECTANGULAR) CEILING RADIATION DAMPER
2. STEEL DUCT DROP
3. BRANCH DUCT
4. 12 SWG HANGER WIRES (4) MIN REQUIRED
5. STEEL SUPPORT CHANNELS
6. MOUNTING FASTENERS (BOLTS, SCREWS, RIVETS)
7. SURFACE MOUNTED STEEL GRILLE OR DIFFUSER
8. CEILING : ACOUSTICAL PANEL (LAY-IN) ACOUSTICAL TILE OR GYPSUM WALLBOARD

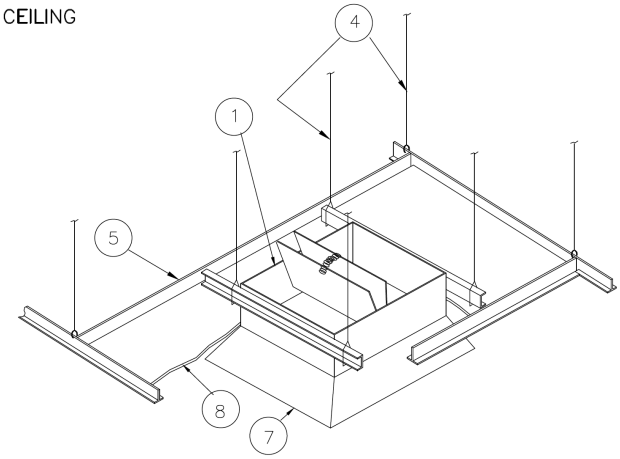


These ceiling dampers are Classified by Underwriters Laboratories, Inc. as to heat barriers in the Fire Resistance Directory under the category of Ceiling Dampers (CABS). Refer to the Classification information in the back of the Fire Resistance Directory regarding the use of these dampers in the various floor / ceiling or Roof / ceiling assemblies. Ceiling dampers and the associated components (surface mounted diffusers or grilles, ducts, etc.) which are to be constructed of steel, are installed in the ceiling to maintain the hourly ratings of the floor-ceiling or roof-ceiling assemblies which are rated 3 hours or less.

**Notes:**

1. Before installing damper, Model 50 CRD (rectangular), open blades and hook fusible link over link catch on opposite blade. Bend down link catch to secure link in position.

2. Support the duct with (2) 16 Ga. cold-rolled steel support channels, 1-1/2 or 2 inches deep with 1/2 inch flanges. Place the support channels at the bottom of the duct adjacent to both sides of the duct drop. Use 12 SWG galvanized steel hanger wire to independently support channels from the structural members of the floor or roof above. All hanger wires shall supported directly from the structural members of the floor or the roof by vertical (not diagonal) hanger wires. Cold-rolled channels shall be used as required to insure that the grid and damper are supported from the structural members by vertical hanger wires (not diagonal).

3. Install the ceiling damper in the duct drop using 3/16 inch diameter by 1/2 inch long steel bolts, No. 8 by 1/2 inch steel sheet metal screws or 3/16 inch diameter by 1/2 inch long steel bolts, No. 8 by 1/2 inch steel sheet metal screws or 3/16 inch diameter steel rivets at 6 inches o.c. and a minimum of (3) places.

4. The clearance between each side of the ceiling damper and the duct drop shall be 1/8 inch maximum.

5. Maximum size of Model 50 CRD (rectangular) is 24 inches x 24 inches.

6. Duct outlets in lay-in ceilings should be field located in an acoustical ceiling panel or tile. Where it is necessary to cut a main runner or cross tee, each cut end shall be supported by a vertical 12 gauge hanger wire. A 1/2 inch clearance shall be maintained between the duct outlet and each cut end of main runner or cross tee. The duct outlet shall be located so that no more than one main runner or cross tee is cut when penetrating the ceiling membrane.

7. Steel grille or diffuser to be attached to the duct drop or ceiling damper using No. 8 by 1/2 inch long sheet metal screws at 6 inches o.c. and a minimum of (3) places.

CLASSIFIED UL C US

INSTALLATION INSTRUCTIONS AND THE PRODUCTS SPECIFIED, ARE IN CONFORMANCE TO ALL OF UNDERWRITERS LABORATORIES REQUIREMENTS 555C

**RECTANGULAR CEILING DAMPER SIZE LIMITATION**

| Maximum Size | Maximum width | Maximum length | Minimum width | Minimum length |
|---|---|---|---|---|
| 576 SQ.IN. | 24" | 24" | 4" | 4" |

231 Commerce Dr. Montgomeryville, PA 18936
Tel: 215-412-4445 Fax: 215-412-4409
Email: lloydind@firedamper.com

138 Industrial Loop West, Orange Park, FL 32073
Tel: 904-541-1655 Fax: 904-541-1657
Email: lloydind1@firedamper.com

B1, 4/F., Luen Ming Hing Factory Building
36 Mok Cheong St.,
To Kwa Wan, Kowloon, H. K.
Tel: 852-2760-4188 Fax: 852-2760-4177
Email: tatanlexyim@lloydasia.com

Website: www.firedamper.com

*ALL STATED SPECIFICATIONS ARE SUBJECT TO UPDATE WITHOUT NOTICE OR OBLIGATION.



Lloyd Industries Inc. 2017

# CEILING RADIATION DAMPERS

## INSTALLATION INSTRUCTIONS

## MODEL CRD-55 and CRD-55-EA (ROUND)

### PARTITION RATINGS OF 3-HOURS OR LESS
### NON-DUCTED SUPPLY OR RETURN

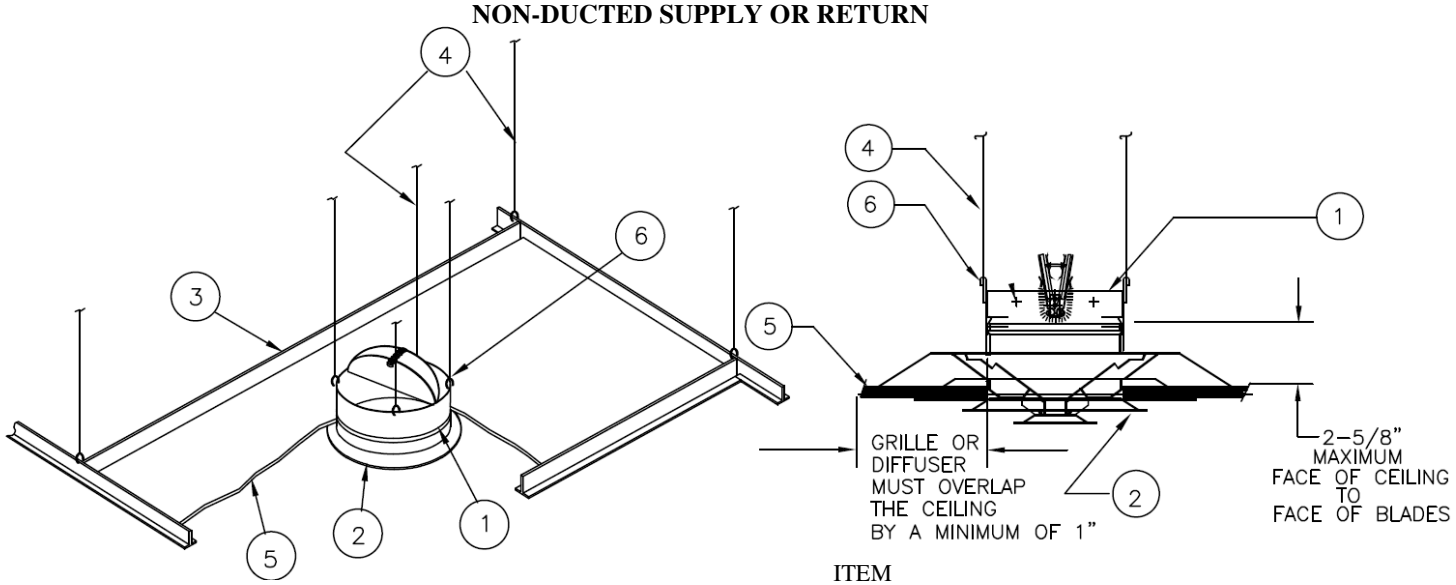


**ROUND CEILING DAMPER SIZE LIMITATION**
**Max. Size: 452 SQ. IN.**

| Model | Maximum Diameter | Minimum Diameter |
|---|---|---|
| CRD-55 | 24" | 4" |
| CRD-55-EA | 24" | 5" |

ITEM

1. 3 HOUR RATED MODEL 55CRD and 55CRD-EA (ROUND) CEILING RADIATION DAMPER
2. MOUNTED GRILLE OR REGISTER
3. CEILING GRID
4. 12 GAUGE STEEL HANGER WIRES (4) MIN REQD.
5. CEILING MATERIAL: ACOUSTICAL PANEL/TILE (LAY-IN) OR GYPSUM WALLBOARD
6. HANGER STRAPS

1. Before installing dampers:

- Model 55CRD (round), open blades and hook fusible link over link catch on opposite blade.
- Bend down link catch to secure link in position.
- Model 55CRD-EA (round easy access) flex the spring wire and secure the link.

INSTALLATION INSTRUCTIONS AND THE PRODUCTS SPECIFIED, ARE IN CONFORMANCE TO ALL OF UNDERWRITERS LABORATORIES REQUIREMENTS 555C

2. Support the damper with (2) 16 Ga. cold-rolled steel support channels, 1-1/2 or 2 inches deep with 1/2 inch flanges. Place the support channels at the top of the damper adjacent to both sides of the damper. Use 12 SWG galvanized steel hanger wire to independently support channels on each end, from the structural members of the floor or roof above. Use fasteners specified in line item #3 to secure channel to damper. Refer to line item #7 for locations. All hanger wires shall be supported directly from the structural members of the floor or the roof by vertical (not diagonal) hanger wires. Cold-rolled channels shall be used as required to insure that the grid and damper are supported from the structural members by vertical hanger wires (not diagonal).

3. Fasten the ceiling damper to channels using 3/16 inch diameter by 1/2 inch long steel bolts, No. 8 by 1/2 inch steel sheet metal screws or 3/16 inch diameter by 1/2 inch long steel bolts, No. 8 by 1/2 inch steel sheet metal screws, 3/16 inch diameter steel rivets or spot welds at 6 inches on center maximum and a minimum of (3) places. Pre-assembly of ceiling radiation dampers to channels is permitted using the listed fastening methods.

4. The clearance between each side of the ceiling damper and lay-in panel shall be 1/8 inch maximum.

5. Damper outlets in lay-in ceilings should be field located in an acoustical ceiling panel or tile. Where it is necessary to cut a main runner or cross tee, each cut end shall be supported by a vertical 12 gauge hanger wire. A 1/2 inch clearance shall be maintained between the duct outlet and each cut end of main runner or cross tee. The duct outlet shall be located so that no more than one main runner or cross tee is cut when penetrating the ceiling membrane.

6. Steel grille or diffuser to be attached to the duct drop or ceiling damper using No. 8 by 1-1/2 inch long sheet metal screws, 3/16 tubular rivets, or 1/4 tack welds .

7. Fastener positions must not interfere with damper blade operation.

231 Commerce Dr. Montgomeryville, PA 18936
Tel: 215-412-4445 Fax: 215-412-4409
Email: lloydind@firedamper.com

138 Industrial Loop West, Orange Park, FL 32073
Tel: 904-541-1655 Fax: 904-541-1657
Email: lloydind1@firedamper.com

B1, 4/F., Luen Ming Hing Factory Building
36 Mok Cheong St.,
To Kwa Wan, Kowloon, H. K.
Tel: 852-2760-4188 Fax: 852-2760-4177
Email: tatanlexyim@lloydasia.com

Website: www.firedamper.com

*ALL STATED SPECIFICATIONS ARE SUBJECT TO UPDATE WITHOUT NOTICE OR OBLIGATION.



Lloyd Industries Inc. 2017

# CEILING RADIATION DAMPERS

## INSTALLATION INSTRUCTIONS

## MODEL CRD-55 and CRD-55-EA (ROUND)

### PARTITION RATINGS OF 3-HOURS OR LESS
### DUCTED SUPPLY OR RETURN

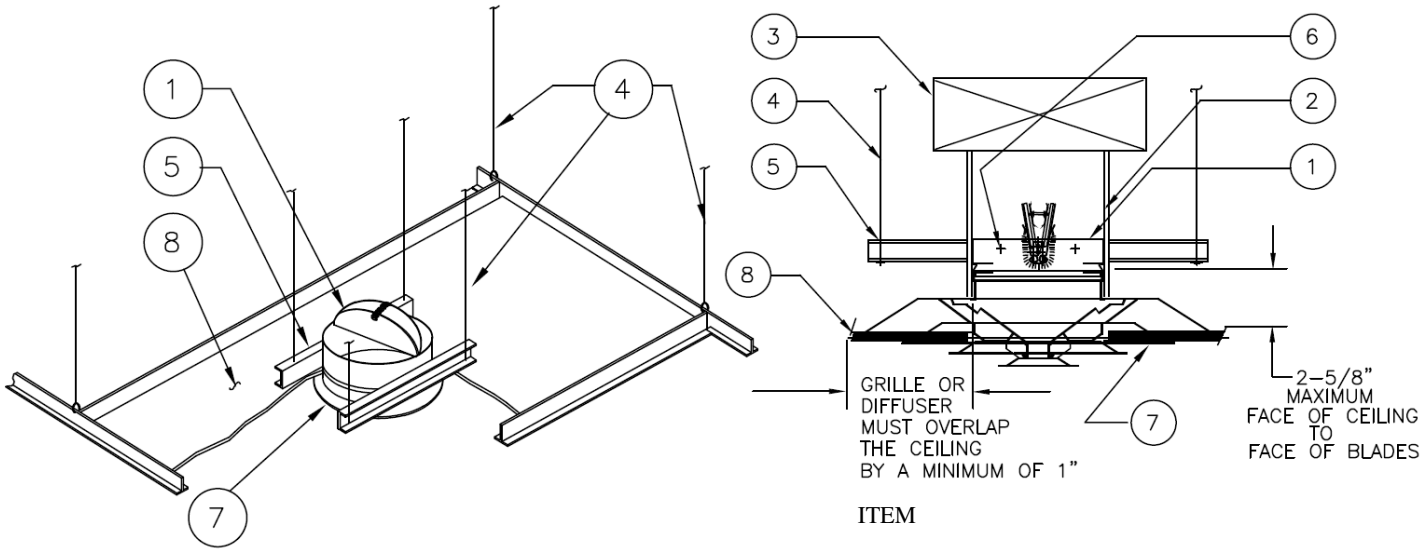


ITEM

1. 3-HOUR RATED MODEL CRD 55 and CRD 55-EA (ROUND) CEILING RADIATION DAMPER
2. STEEL DUCT DROP, SLEEVE (LESS #3 PLENUM PERMITTED)
3. BRANCH DUCT
4. 12 SWG HANGER WIRES (4) MIN REQD
5. STEEL SUPPORT CHANNELS
6. MOUNTING FASTENERS (BOLTS, SCREWS, RIVETS)
7. MOUNTED STEEL, GRILLE, DIFFUSER, OR DROP DUCTING
8. CEILING : ACOUSTICAL PANEL (LAY-IN) ACOUSTICAL TILE OR GYPSUM WALLBOARD

**ROUND CEILING DAMPER SIZE LIMITATIONS**
**Max. Size: 452 SQ. IN.**

| Model | Maximum Diameter | Minimum Diameter |
|---|---|---|
| CRD-55 | 24" | 4" |
| CRD-55-EA | 24" | 5" |

1. Before installing dampers:

- Model CRD 55 (round), open blades and hook fusible link over link catch on opposite blade.
- Bend down link catch to secure link in position.
- Model CRD 55-EA (round easy access) flex the spring wire and secure the link.

INSTALLATION INSTRUCTIONS AND THE PRODUCTS SPECIFIED, ARE IN CONFORMANCE TO ALL OF UNDERWRITERS LABORATORIES REQUIREMENTS 555C

2. Support the damper with (2) 16 Ga. cold-rolled steel support channels, 1-1/2 or 2 inches deep with 1/2 inch flanges. Place the support channels at the top of the damper adjacent to both sides of the damper. Use 12 SWG galvanized steel hanger wire to independently support channels on each end, from the structural members of the floor or roof above. Use fasteners specified in line item #3 to secure channel to damper. Refer to line item #7 for locations. All hanger wires shall be supported directly from the structural members of the floor or the roof by vertical (not diagonal) hanger wires. Cold-rolled channels shall be used as required to insure that the grid and damper are supported from the structural members by vertical hanger wires (not diagonal).

3. Fasten the ceiling damper to channels using 3/16 inch diameter by 1/2 inch long steel bolts, No. 8 by 1/2 inch steel sheet metal screws or 3/16 inch diameter by 1/2 inch long steel bolts, No. 8 by 1/2 inch steel sheet metal screws, 3/16 inch diameter steel rivets or spot welds at 6 inches on center maximum and a minimum of (3) places. Pre-assembly of ceiling radiation dampers to channels is permitted using the listed fastening methods.

4. The clearance between each side of the ceiling damper and lay-in panel shall be 1/8 inch maximum.

5. Damper outlets in lay-in ceilings should be field located in an acoustical ceiling panel or tile. Where it is necessary to cut a main runner or cross tee, each cut end shall be supported by a vertical 12 gauge hanger wire. A 1/2 inch clearance shall be maintained between the duct outlet and each cut end of main runner or cross tee. The duct outlet shall be located so that no more than one main runner or cross tee is cut when penetrating the ceiling membrane.

6. Steel grille or diffuser to be attached to the duct drop or ceiling damper using No. 8 by 1-1/2 inch long sheet metal screws, 3/16 tubular rivets, or 1/4 tack welds .

7. Fastener positions must not interfere with damper blade operation.

231 Commerce Dr. Montgomeryville, PA 18936
Tel: 215-412-4445 Fax: 215-412-4409
Email: lloydind@firedamper.com

138 Industrial Loop West, Orange Park, FL 32073
Tel: 904-541-1655 Fax: 904-541-1657
Email: lloydind1@firedamper.com

B1, 4/F., Luen Ming Hing Factory Building
36 Mok Cheong St.,
To Kwa Wan, Kowloon, H. K.
Tel: 852-2760-4188 Fax: 852-2760-4177
Email: tatanlexyim@lloydasia.com

Website: www.firedamper.com

*ALL STATED SPECIFICATIONS ARE SUBJECT TO UPDATE WITHOUT NOTICE OR OBLIGATION.



Lloyd Industries Inc. 2017

# CEILING RADIATION DAMPERS

## INSTALLATION INSTRUCTIONS

## MODEL CRD-50 and CRD-50-EA (RECTANGULAR)

### PARTITION RATINGS OF 3-HOURS OR LESS
### DUCTED SUPPLY OR RETURN

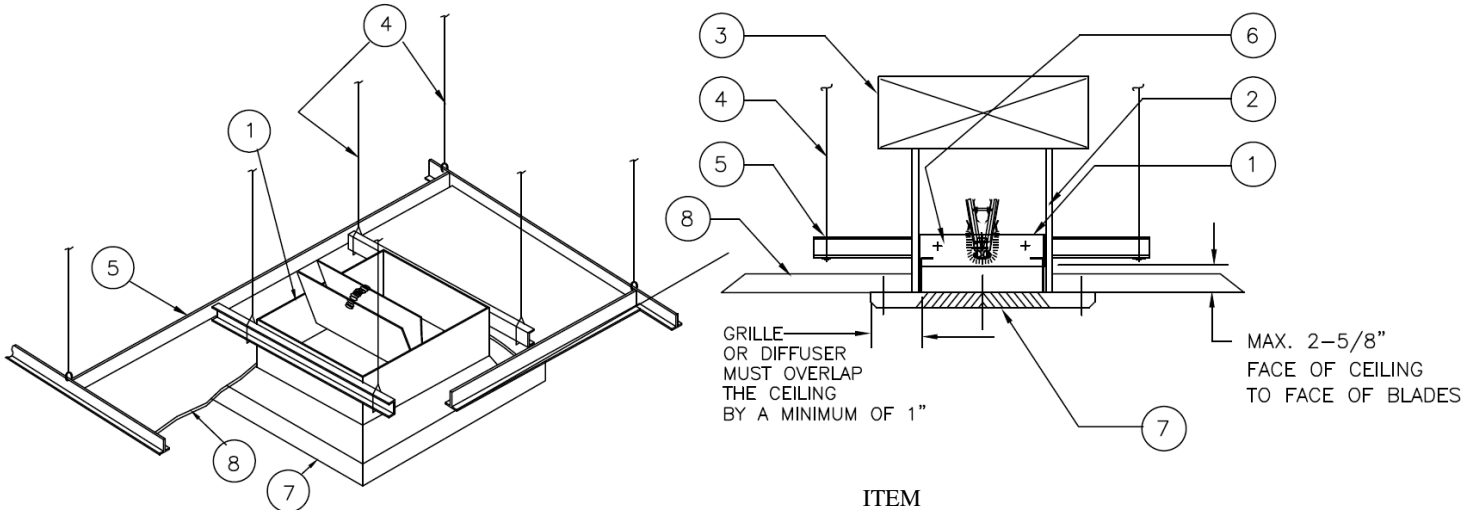


ITEM

1. 3-HOUR RATED MODEL CRD 50 and CRD 50-EA (RECTANGULAR) CEILING RADIATION DAMPER
2. STEEL DUCT DROP, SLEEVE (LESS #3 PLENUM PERMITTED)
3. BRANCH DUCT, PLENUM
4. 12 SWG HANGER WIRES (4) MIN REQD
5. STEEL SUPPORT CHANNELS
6. MOUNTING FASTENERS (BOLTS, SCREWS, RIVETS)
7. MOUNTED STEEL, GRILLE, DIFFUSER, OR DROP DUCTING
8. CEILING : ACOUSTICAL PANEL (LAY-IN) ACOUSTICAL TILE OR GYPSUM WALLBOARD

**RECTANGULAR CEILING DAMPER SIZE LIMITATIONS**
**Max. Size: 576 SQ. IN.**

| Model | Max. Width | Max. Length | Min. Width | Min. Length |
|---|---|---|---|---|
| CRD-50 | 24" | 24" | 4" | 4" |
| CRD-50-EA | 24" | 24" | 6" | 6" |

1. Before installing dampers:

- Model CRD 50 (rectangular), open blades and hook fusible link over link catch on opposite blade.
- Bend down link catch to secure link in position.
- Model CRD 50-EA (rectangular easy access) flex the spring wire and secure the link.

INSTALLATION INSTRUCTIONS AND THE PRODUCTS SPECIFIED, ARE IN CONFORMANCE TO ALL OF UNDERWRITERS LABORATORIES REQUIREMENTS 555C

2. Support the damper with (2) 16 Ga. cold-rolled steel support channels, 1-1/2 or 2 inches deep with 1/2 inch flanges. Place the support channels at the top of the damper adjacent to both sides of the damper. Use 12 SWG galvanized steel hanger wire to independently support channels on each end, from the structural members of the floor or roof above. Use fasteners specified in line item #3 to secure channel to damper. Refer to line item #7 for locations. All hanger wires shall be supported directly from the structural members of the floor or the roof by vertical (not diagonal) hanger wires. Cold-rolled channels shall be used as required to insure that the grid and damper are supported from the structural members by vertical hanger wires (not diagonal).

3. Fasten the ceiling damper to channels using 3/16 inch diameter by 1/2 inch long steel bolts, No. 8 by 1/2 inch steel sheet metal screws or 3/16 inch diameter by 1/2 inch long steel bolts, No. 8 by 1/2 inch steel sheet metal screws, 3/16 inch diameter steel rivets or spot welds at 6 inches on center maximum and a minimum of (3) places. Pre-assembly of ceiling radiation dampers to channels is permitted using the listed fastening methods.

4. The clearance between each side of the ceiling damper and lay-in panel shall be 1/8 inch maximum.

5. Damper outlets in lay-in ceilings should be field located in an acoustical ceiling panel or tile. Where it is necessary to cut a main runner or cross tee, each cut end shall be supported by a vertical 12 gauge hanger wire. A 1/2 inch clearance shall be maintained between the duct outlet and each cut end of main runner or cross tee. The duct outlet shall be located so that no more than one main runner or cross tee is cut when penetrating the ceiling membrane.

6. Steel grille or diffuser to be attached to the duct drop or ceiling damper using No. 8 by 1-1/2 inch long sheet metal screws, 3/16 tubular rivets, or 1/4 tack welds .

7. Fastener positions must not interfere with damper blade operation.

231 Commerce Dr. Montgomeryville, PA 18936
Tel: 215-412-4445 Fax: 215-412-4409
Email: lloydind@firedamper.com

138 Industrial Loop West, Orange Park, FL 32073
Tel: 904-541-1655 Fax: 904-541-1657
Email: lloydind1@firedamper.com

B1, 4/F., Luen Ming Hing Factory Building
36 Mok Cheong St.,
To Kwa Wan, Kowloon, H. K.
Tel: 852-2760-4188 Fax: 852-2760-4177
Email: tatanlexyim@lloydasia.com

Website: www.firedamper.com

*ALL STATED SPECIFICATIONS ARE SUBJECT TO UPDATE WITHOUT NOTICE OR OBLIGATION.



Lloyd Industries Inc. 2017

# GENERAL INSTALLATION INSTRUCTIONS
# MODEL CRD-50 and CRD-50-EA (RECTANGLE)
# 3 HOUR OR LESS RATED PARTITIONS

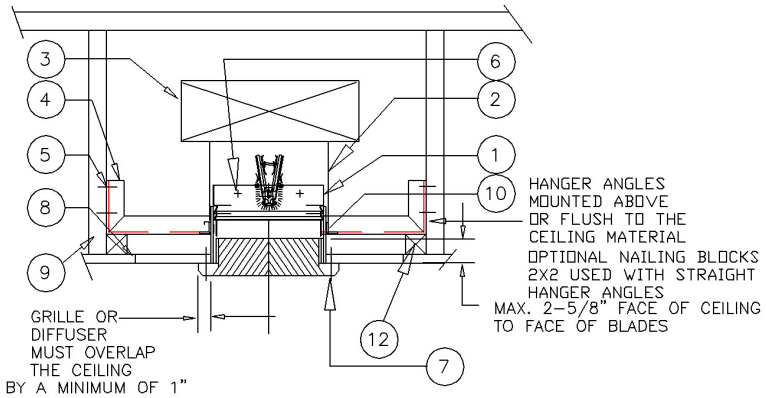


ITEM

1. MODEL 50 CRD (RECTANGLE) CEILING RADIATION DAMPER
2. STEEL DUCT DROP(LESS #3 PLENUM PERMITTED)
3. BRANCH PLENUM, OR PLENUM BOOT
4. HANGER ANGLES (2) 1-1/2 X 1-1/2 X 16 GAUGE
5. #6 COMMON NAILS OR #8 X 1-1/4 SCREWS
6. MOUNTING FASTENERS (BOLTS, SCREWS, RIVETS)
7. STEEL GRILLE, DIFFUSER, OR DROP DUCTING
8. CEILING : GYPSUM WALLBOARD
   ACOUSTICAL TILE OR ACOUSTICAL PANEL (LAY-IN)
9. JOISTS, TRUSSES, BEAMS
10. STABILIZING ANGLES (2) 1/2 X 1-1/2 X 16 GA. X 3"
11. MOUNTING FASTENERS (BOLTS, SCREWS, RIVETS)

Model CRD50 and CRD50-EA Ceiling Radiation Dampers are Classified to UL 555C as 3 HR or less heat barriers illustrated in the UL Fire Resistance Directory. Refer to the partition classification information in the Fire Resistance Directory regarding the use of these dampers in the various floor-ceiling and roof-ceiling assemblies. Ceiling dampers and the associated components (diffusers, grilles, ducts, etc. which are to be constructed of steel are installed in the ceiling to maintain the hourly ratings of these rated floor-ceiling, roof-ceiling, assemblies. The combination of damper, partition, and installation establish this 3 HR or less Underwriters Laboratory Fire Rating.

Lloyd Industries MODEL CRD50 and CRD50-EA are laboratory approved for installation in all 3 hr. or less rated fire barriers listed in the Underwriters Laboratory Fire Resistance Directory, where fire barriers are shown with partition penetrations. Fire barriers without penetrations, and fire barriers not listed in the UL Fire Resistance Directory are not approved for installations and require the use of "Special" Assemblies such as CRD50-BT, and CRD55-BT Laboratory Approved Assemblies, or approval of local authorities. (See spec sheets for CRD-BT Assemblies)

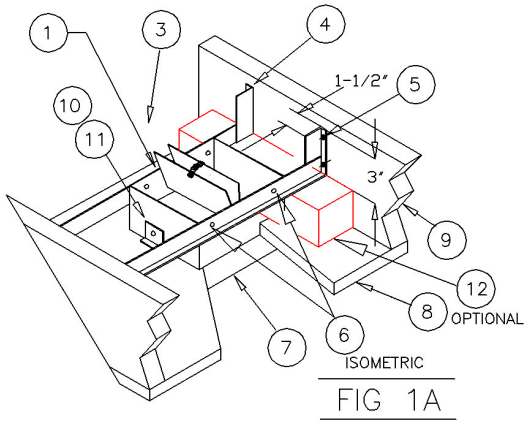

FIG 1A

**Notes:**

1. Before installing the damper, CRD Model 50 (rectangle), and CRD Model 50-EA (rectangle) open the blades and hook the fusible link over the link catch on the opposite blade. Bend down the link catch to secure the link in position. For CRD Model 50-EA flex the spring wire and secure the link.
2. Measure the actual spacing between the joists or other structural members. Allowing for a 3.00" flange at each mounting point. Cut and bend the angles on both ends to 90 degrees. or the appropriate angle required. Mounting angles are fastened to joists or other structural members with a minimum of two fasteners for each mounting point using #6 common nails or #8 x 1-1/4" long screws.
3. CRD Model 50 and CRD Model 50-EA are connected to the mounting angles with sheet metal screws, rivets, or bolts. Two connections on each angle as a minimum. Note: fastener positions must not interfere with the damper blade operation.
4. CRD Models 50 and CRD Model 50-EA are connected to the stabilizing angles with sheet metal screws, rivets, or bolts. One connection on each angle as a minimum. The stabilizing angles are to be mounted with one face of the angle flush to the ceiling material. Note: fastener positions must not interfere with the damper blade operation.
5. The installation mounting position of the closed damper blade face must not exceed 2-5/8" from the face of the rated barrier.
6. Install the ceiling damper in the duct drop using 3/16 inch diameter by 1/2 inch long steel bolts, No. 8 by 1/2 inch steel sheet metal screws or 3/16 inch diameter by 1/2 inch long steel bolts, No. 8 by 1/2 inch steel sheet metal screws or 3/16 inch diameter steel rivets at 6 inches o.c. and a minimum of (3) places. For flexible ducting; connect with draw clamps, #16 SWG wire, or cable ties as per SMACMA Standards requirements.
7. The clearance between each side of the ceiling damper and the duct drop shall be 1/8 inch maximum.
8. The maximum size of CRD Model 50 (rectangle) and CRD Model 50-EA (rectangle) is 24" W x 24" H.
9. Steel/Alum. grille or diffuser to be attached to the duct drop or ceiling damper using No. 8 by 1-1/2 inch lg.sheet metal

INSTALLATION INSTRUCTIONS AND THE PRODUCTS SPECIFIED, ARE IN CONFORMANCE TO ALL OF UNDERWRITERS LABORATORIES REQUIREMENTS 555C

231 Commerce Dr. Montgomeryville, PA 18936
Tel: 215-412-4445 Fax: 215-412-4409
Email: lloydind@firedamper.com

138 Industrial Loop West, Orange Park, FL 32073
Tel: 904-541-1655 Fax: 904-541-1657
Email: lloydind1@firedamper.com

B1, 4/F., Luen Ming Hing Factory Building
36 Mok Cheong St.,
To Kwa Wan, Kowloon, H. K.
Tel: 852-2760-4188 Fax: 852-2760-4177
Email: tatanlexyim@lloydasia.com

Website: www.firedamper.com

*ALL STATED SPECIFICATIONS ARE SUBJECT TO UPDATE WITHOUT NOTICE OR OBLIGATION.



Lloyd Industries Inc. 2017

# GENERAL INSTALLATION INSTRUCTIONS
# MODEL CRD-55 and CRD-55-EA (ROUND)
# 3 HOUR OR LESS RATED PARTITIONS

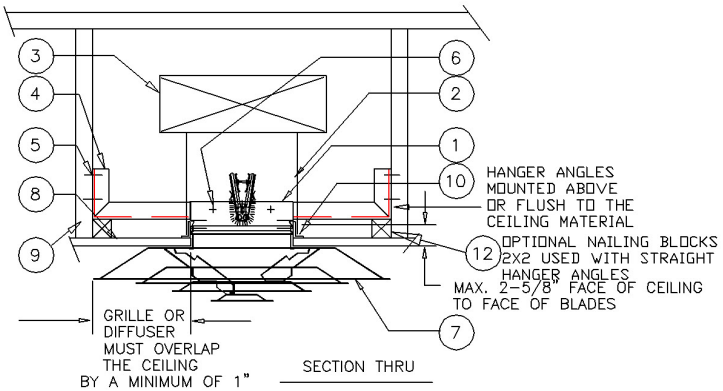


ITEM

1. MODEL 55 CRD (ROUND) CEILING RADIATION DAMPER
2. STEEL DUCT DROP(LESS #3 PLENUM PERMITTED)
3. BRANCH PLENUM, OR PLENUM BOOT
4. HANGER ANGLES (2) 1-1/2 X 1-1/2 X 16 GAUGE
5. #6 COMMON NAILS OR #8 X 1-1/4 SCREWS
6. MOUNTING FASTENERS (BOLTS, SCREWS, RIVETS)
7. STEEL GRILLE, DIFFUSER, OR DROP DUCTING
8. CEILING : GYPSUM WALLBOARD
   ACOUSTICAL TILE OR ACOUSTICAL PANEL (LAY-IN)
9. JOISTS, TRUSSES, BEAMS
10. STABILIZING ANGLES (2) 1/2 X 1-1/2 X 16 GA. X 3"
11. MOUNTING FASTENERS (BOLTS, SCREWS, RIVETS)

Model CRD55 and CRD55-EA Ceiling Radiation Dampers are Classified to UL 555C as 3 HR or less heat barriers illustrated in the UL Fire Resistance Directory. Refer to the partition classification information in the Fire Resistance Directory regarding the use of these dampers in the various floor-ceiling and roof-ceiling assemblies. Ceiling dampers and the associated components (diffusers, grilles, ducts, etc. which are to be constructed of steel are installed in the ceiling to maintain the hourly ratings of these rated floor-ceiling, roof-ceiling, assemblies. The combination of damper, partition, and installation establish this 3 HR or less Underwriters Laboratory Fire Rating.

Lloyd Industries MODEL CRD55 and CRD55-EA are laboratory approved for installation in all 3 hr. or less rated fire barriers listed in the Underwriters Laboratory Fire Resistance Directory, where fire barriers are shown with partition penetrations. Fire barriers without penetrations, and fire barriers not listed in the UL Fire Resistance Directory are not approved for installations and require the use of "Special" Assemblies such as CRD50-BT, and CRD55-BT Laboratory Approved Assemblies, or approval of local authorities. (See spec sheets for CRD-BT Assemblies)

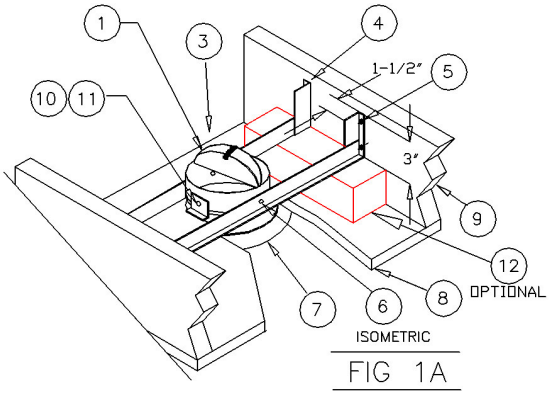

FIG 1A

**Notes:**

1. Before installing the damper, CRD Model 55 (round), and CRD Model 55-EA (round) open the blades and hook the fusible link over the link catch on the opposite blade. Bend down the link catch to secure the link in position. For CRD Model 55-EA flex the spring wire and secure the link.
2. Measure the actual spacing between the joists or other structural members. Allowing for a 3.00" flange at each mounting point. Cut and bend the angles on both ends to 90 degrees. or the appropriate angle required. Mounting angles are fastened to joists or other structural members with a minimum of two fasteners for each mounting point using #6 common nails or #8 x 1-1/4" long screws.
3. CRD Model 55 and CRD Model 55-EA are connected to the mounting angles with sheet metal screws, rivets, or bolts. Two connections on each angle as a minimum. Note: fastener positions must not interfere with the damper blade operation.
4. CRD Models 55 and CRD Model 55-EA are connected to the stabilizing angles with sheet metal screws, rivets, or bolts. One connection on each angle as a minimum. The stabilizing angles are to be mounted with one face of the angle flush to the ceiling material. Note: fastener positions must not interfere with the damper blade operation.
5. The installation mounting position of the closed damper blade face must not exceed 2-5/8" from the face of the rated barrier.
6. Install the ceiling damper in the duct drop using 3/16 inch diameter by 1/2 inch long steel bolts, No. 8 by 1/2 inch steel sheet metal screws or 3/16 inch diameter by 1/2 inch long steel bolts, No. 8 by 1/2 inch steel sheet metal screws or 3/16 inch diameter steel rivets at 6 inches o.c. and a minimum of (3) places. For flexible ducting; connect with draw clamps, #16 SWG wire, or cable ties as per SMACMA Standards requirements.
7. The clearance between each side of the ceiling damper and the duct drop shall be 1/8 inch maximum.
8. The maximum size of CRD Model 55 (round) and CRD Model 55-EA (round) is 24" diameter.
9. Steel/Alum. grille or diffuser to be attached to the duct drop or ceiling damper using No. 8 by 1-1/2 inch lg.sheet metal

INSTALLATION INSTRUCTIONS AND THE PRODUCTS SPECIFIED, ARE IN CONFORMANCE TO ALL OF UNDERWRITERS LABORATORIES REQUIREMENTS 555C

231 Commerce Dr. Montgomeryville, PA 18936
Tel: 215-412-4445 Fax: 215-412-4409
Email: lloydind@firedamper.com

138 Industrial Loop West, Orange Park, FL 32073
Tel: 904-541-1655 Fax: 904-541-1657
Email: lloydind1@firedamper.com

B1, 4/F., Luen Ming Hing Factory Building
36 Mok Cheong St.,
To Kwa Wan, Kowloon, H. K.
Tel: 852-2760-4188 Fax: 852-2760-4177
Email: tatanlexyim@lloydasia.com

Website: www.firedamper.com

*ALL STATED SPECIFICATIONS ARE SUBJECT TO UPDATE WITHOUT NOTICE OR OBLIGATION.



Lloyd Industries Inc. 2017

# DAMPER INSTALLATION INSTRUCTIONS

## Installation and Maintenance Instructions
## 1-1/2 Hour Rated, UL Classified model 75 fire dampers
## For use in fire barriers with ratings of less than 3 hours

### INSPECTION

1. Inspect for shipping damage.
2. Inspect for proper size and model.
3. Inspect installed damper for proper orientation, as stated on damper label.
4. Inspect for obstructions and complete closure.
5. Manually cycle the damper to verify proper operation.

Typical Wall Installation

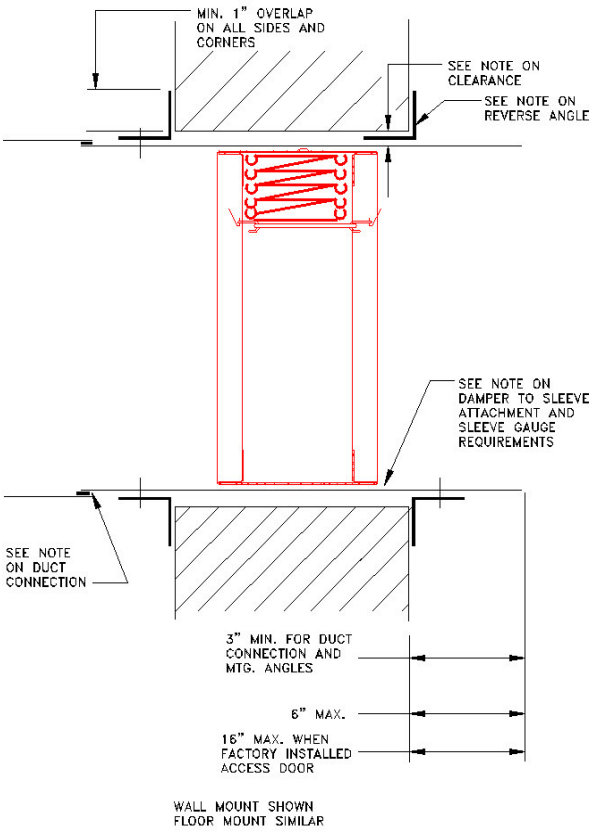


CLASSIFIED UL C US

INSTALLATION INSTRUCTIONS IN CONFORMANCE TO UNDERWRITERS LABORATORIES REQUIREMENTS

### INSTALLATION

The basic intent of a proper installation is to secure the fire damper in, not to, the opening in such a manner as to prevent distortion and disruption of damper operation by allowing the fire damper in openings to expand and the connecting duct to separate in the event of the collapse of the hanging system. The fire damper must be positioned within the masonry, block or gypsum wallboard fire barrier. Reference our details of a suggested drywall partition.

### DAMPER TO SLEEVE ATTACHMENT

A Sleeve shall be of sufficient length to permit direct attachment of perimeter mounting angles. This damper can be supplied by the factory mounted in a sleeve. If the sleeve is not factory supplied, it must be attached on both sides of the damper by one of the following methods:
Secure with 1/4" dia. Bolts and nuts or by welding with beads 1/2" in length, or with No.10 steel sheet metal screws, or 3/16" steel rivets. Fasteners shall be 8" maximum on centers, fasteners cannot be placed where they will interfere with damper operation. Gaps at corners between the damper and its sleeve must be small enough to prohibit the passage of an 1/8" diameter rod through the entire depth of the gap between two damper panels and its sleeve.

### SLEEVE THICKNESS

Sleeves shall be the same gauge or heavier as the duct to which it is attached. Gauges shall conform to SMACNA or ASHRAE duct standards. Damper sleeve can be no thicker than 10GA steel. On type C dampers, the sleeve must be 18GA or heavier.

### EXPANSION CLEARANCE

The opening in the wall or floor for the fire damper shall be sized so as to provide expansion clearance between the sleeve and opening. Clearances do not vary with walls constructed of different materials. A minimum of 1/8" per foot of overall damper/sleeve width and height is required. The maximum opening size shall not 1/8" per foot plus 1", minimum total clearance shall be at least 1/4" larger than the overall assembly.

231 Commerce Dr. Montgomeryville, PA 18936
Tel: 215-412-4445 Fax: 215-412-4409
Email: lloydind@firedamper.com

138 Industrial Loop West, Orange Park, FL 32073
Tel: 904-541-1655 Fax: 904-541-1657
Email: lloydind1@firedamper.com

B1, 4/F., Luen Ming Hing Factory Building
36 Mok Cheong St.,
To Kwa Wan, Kowloon, H. K.
Tel: 852-2760-4188 Fax: 852-2760-4177
Email: tatanlexyim@lloydasia.com

Website: www.firedamper.com

*ALL STATED SPECIFICATIONS ARE SUBJECT TO UPDATE WITHOUT NOTICE OR OBLIGATION.



Lloyd Industries Inc. 2017

# DAMPER INSTALLATION INSTRUCTIONS

## Installation and Maintenance Instructions
## 3 Hours Rated, UL Classified model 75 fire dampers
## For use in fire barriers with ratings of less than 4 hours

### INSPECTION

1. Inspect for shipping damage.
2. Inspect for proper size and model.
3. Inspect installed damper for proper orientation, as stated on damper label.
4. Inspect for obstructions and complete closure.
5. Manually cycle the damper to verify proper operation.

Typical Wall Installation

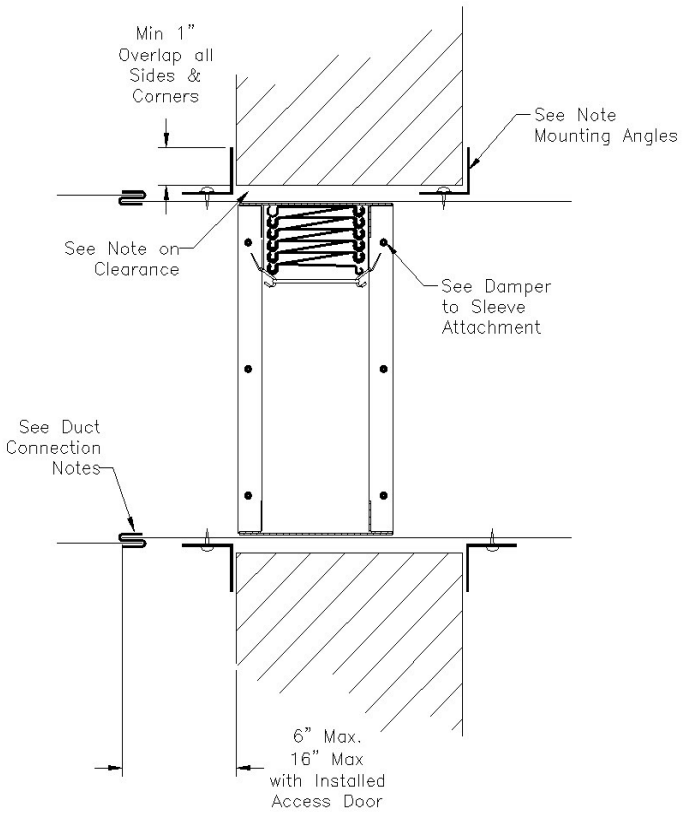


Wall Mount Shown (Vertical Installation)

INSTALLATION INSTRUCTIONS IN CONFORMANCE TO UNDERWRITERS LABORATORIES REQUIREMENTS

### INSTALLATION

The basic intent of a proper installation is to secure the fire damper in, not to, the opening in such a manner as to prevent distortion and disruption of damper operation by allowing the fire damper in openings to expand and the connecting duct to separate in the event of the collapse of the hanging system. The fire damper must be positioned within the masonry, block or gypsum wallboard fire barrier. Reference our details of a suggested drywall partition.

### DAMPER TO SLEEVE ATTACHMENT

A Sleeve shall be of sufficient length to permit direct attachment of perimeter mounting angles. This damper can be supplied by the factory mounted in a sleeve. If the sleeve is not factory supplied, it must be attached on both sides of the damper by one of the following methods:
Secure with 1/4" dia. Bolts and nuts or by welding with beads 1/2" in length, or with No.10 steel sheet metal screws, or 3/16" steel rivets. Fasteners shall be 8" maximum on centers, Fasteners cannot be placed where they will interfere with damper operation. Gaps at corners between the damper and its sleeve must be small enough to prohibit the passage of an 1/8" diameter rod through the entire depth of the gap between two damper panels and its sleeve.

### SLEEVE THICKNESS

Sleeves shall be the same gauge or heavier as the duct to which it is attached. Gauges shall conform to SMACNA or ASHRAE duct standards. Damper sleeve can be no thicker than 10GA steel. On type C dampers, the sleeve must be 18GA or heavier.

### EXPANSION CLEARANCE

The opening in the wall or floor for the fire damper shall be sized so as to provide expansion clearance between the sleeve and opening. Clearances do not vary with walls constructed of different materials. A minimum of 1/8" per foot of overall damper/sleeve width and height is required. The maximum opening size shall not 1/8" per foot plus 1", minimum total clearance shall be at least 1/4" larger than the overall assembly.

231 Commerce Dr. Montgomeryville, PA 18936
Tel: 215-412-4445 Fax: 215-412-4409
Email: lloydind@firedamper.com

138 Industrial Loop West, Orange Park, FL 32073
Tel: 904-541-1655 Fax: 904-541-1657
Email: lloydind1@firedamper.com

B1, 4/F., Luen Ming Hing Factory Building
36 Mok Cheong St.,
To Kwa Wan, Kowloon, H. K.
Tel: 852-2760-4188 Fax: 852-2760-4177
Email: tatanlexyim@lloydasia.com

Website: www.firedamper.com

*ALL STATED SPECIFICATIONS ARE SUBJECT TO UPDATE WITHOUT NOTICE OR OBLIGATION.



Lloyd Industries Inc. 2017

# DAMPER INSTALLATION INSTRUCTIONS

## Installation and Maintenance Instructions
## 3 Hours Rated, UL Classified model 75 fire dampers
## For use in fire barriers with ratings of less than 4 hours

### INSPECTION

1. Inspect for shipping damage.
2. Inspect for proper size and model.
3. Inspect installed damper for proper orientation, as stated on damper label.
4. Inspect for obstructions and complete closure.
5. Manually cycle the damper to verify proper operation.

Typical Wall Installation

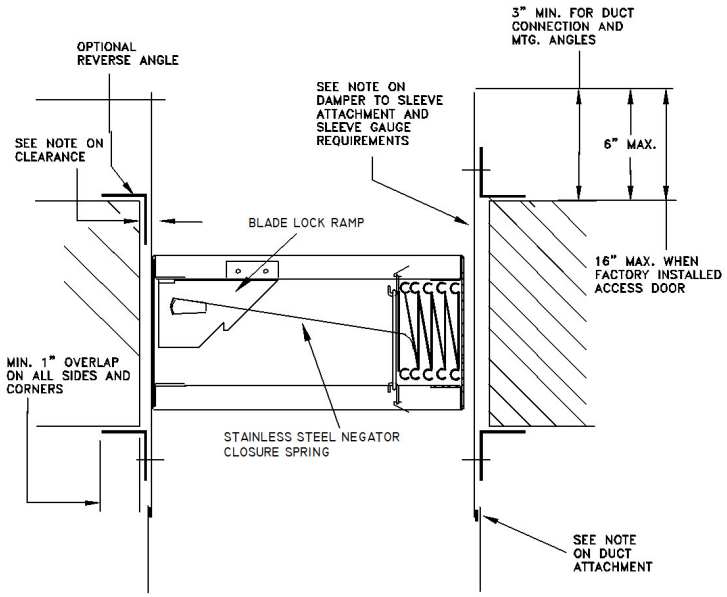


Horizontal mount shown

INSTALLATION INSTRUCTIONS IN CONFORMANCE TO UNDERWRITERS LABORATORIES REQUIREMENTS

### INSTALLATION

The basic intent of a proper installation is to secure the fire damper in, not to, the opening in such a manner as to prevent distortion and disruption of damper operation by allowing the fire damper in openings to expand and the connecting duct to separate in the event of the collapse of the hanging system. The fire damper must be positioned within the masonry, block or gypsum wallboard fire barrier. Reference our details of a suggested drywall partition.

### DAMPER TO SLEEVE ATTACHMENT

A Sleeve shall be of sufficient length to permit direct attachment of perimeter mounting angles. This damper can be supplied by the factory mounted in a sleeve. If the sleeve is not factory supplied, it must be attached on both sides of the damper by one of the following methods:
Secure with 1/4" dia. Bolts and nuts or by welding with beads 1/2" in length, or with No.10 steel sheet metal screws, or 3/16" steel rivets. Fasteners shall be 8" maximum on centers, Fasteners cannot be placed where they will interfere with damper operation. Gaps at corners between the damper and its sleeve must be small enough to prohibit the passage of an 1/8" diameter rod through the entire depth of the gap between two damper panels and its sleeve.

### SLEEVE THICKNESS

Sleeves shall be the same gauge or heavier as the duct to which it is attached. Gauges shall conform to SMACNA or ASHRAE duct standards. Damper sleeve can be no thicker than 10GA steel. On type C dampers, the sleeve must be 18GA or heavier.

### EXPANSION CLEARANCE

The opening in the wall or floor for the fire damper shall be sized so as to provide expansion clearance between the sleeve and opening. Clearances do not vary with walls constructed of different materials. A minimum of 1/8" per foot of overall damper/sleeve width and height is required. The maximum opening size shall not 1/8" per foot plus 1", minimum total clearance shall be at least 1/4" larger than the overall assembly.

231 Commerce Dr. Montgomeryville, PA 18936
Tel: 215-412-4445 Fax: 215-412-4409
Email: lloydind@firedamper.com

138 Industrial Loop West, Orange Park, FL 32073
Tel: 904-541-1655 Fax: 904-541-1657
Email: lloydind1@firedamper.com

B1, 4/F., Luen Ming Hing Factory Building
36 Mok Cheong St.,
To Kwa Wan, Kowloon, H. K.
Tel: 852-2760-4188 Fax: 852-2760-4177
Email: tatanlexyim@lloydasia.com

Website: www.firedamper.com

*ALL STATED SPECIFICATIONS ARE SUBJECT TO UPDATE WITHOUT NOTICE OR OBLIGATION.



Lloyd Industries Inc. 2017

# DAMPER INSTALLATION INSTRUCTIONS

## Installation and Maintenance Instructions
## 1-1/2 Hours Rated, UL Classified model 75 fire dampers
## For use in fire barriers with ratings of less than 3 hours

### DAMPER BEHIND A GRILLE

1. Perimeter mounting angles to be a minimum of 1-1/2 x 1 -1/2 x 16GA on dampers 36 x 50 and smaller. For dampers greater than 36 x 50, angles to be a minimum of 1-1/2 x 1-1/2 x14GA.
2. Grille to flange fasteners cannot penetrate fire wall ( see note 4).
3. Secure angles to sleeve only, so as to frame the wall opening. Fasten to the sleeve only using the same means as required for fastening the damper to the sleeve.
4. Grille to flange attachment by means of 1/4" dia. Pop rivets, #8 sheet metal screws or #8 bolts and nuts. Fasteners to be plated steel or stainless steel, minimum two fasteners per side.

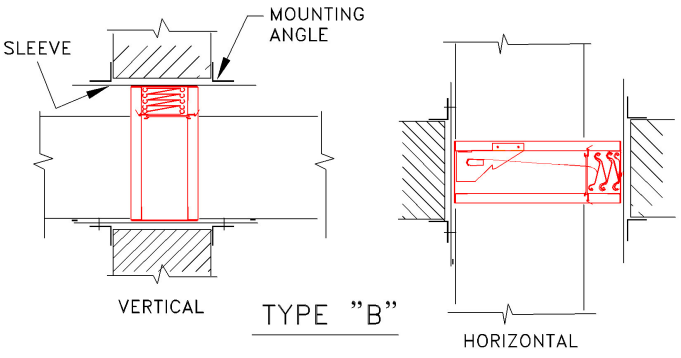


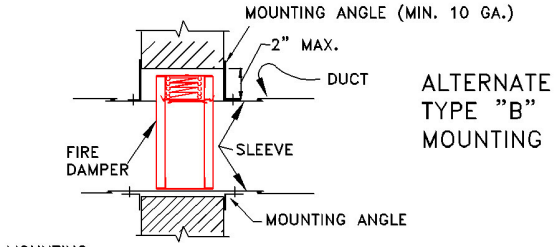


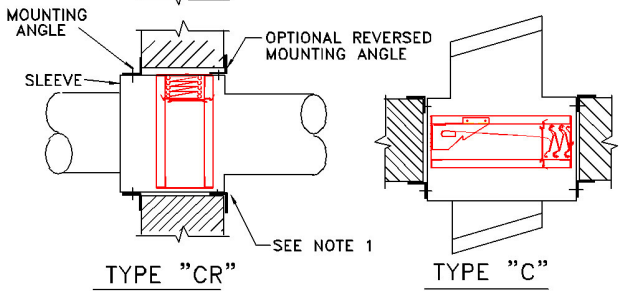


### TYPE "CR"

The factory supplied 22 GA. Collar to 18 GA cap connection on type "C, CR" dampers is a breakaway connection under the following conditions:

1. Round unit duct diameters are no larger that 52"
2. Oval duct sizes are no larger that 58" W x 29"H.
3. Duct gauges shall conform to the SMACNA or ASHRAE duct standard.
4. Duct diameters of 22 inches(559mm) and smaller shall have 3 No. 10 (4.8mm) diameter sheet metal screws evenly spaced around the circumference of the duct.
5. Duct diameters greater than 22 inches and up shall have 5 sheet metal screws evenly spaced around the circumference of the duct.
6. Dampers outside of these restrictions (i.e.) multiple damper and special size and application dampers must use a 4" wide drawband connection as shown in the SMACNA Fire, Smoke, and Radiation Damper Installation Guide.

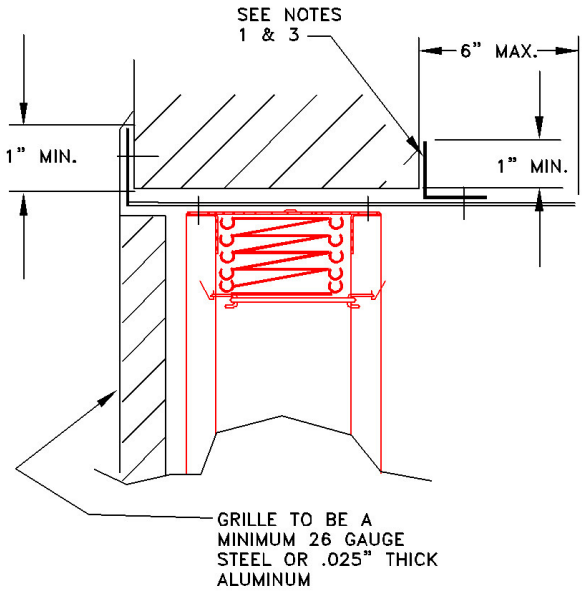


INSTALLATION INSTRUCTIONS IN CONFORMANCE TO UNDERWRITERS LABORATORIES REQUIREMENTS

231 Commerce Dr. Montgomeryville, PA 18936
Tel: 215-412-4445 Fax: 215-412-4409
Email: lloydind@firedamper.com

138 Industrial Loop West, Orange Park, FL 32073
Tel: 904-541-1655 Fax: 904-541-1657
Email: lloydind1@firedamper.com

B1, 4/F., Luen Ming Hing Factory Building
36 Mok Cheong St.,
To Kwa Wan, Kowloon, H. K.
Tel: 852-2760-4188 Fax: 852-2760-4177
Email: tatanlexyim@lloydasia.com

Website: www.firedamper.com

*ALL STATED SPECIFICATIONS ARE SUBJECT TO UPDATE WITHOUT NOTICE OR OBLIGATION.



Lloyd Industries Inc. 2017

# DAMPER INSTALLATION INSTRUCTIONS

## Installation and Maintenance Instructions
## 1-1/2 Hours Rated, UL Classified model 75 fire dampers
## For use in fire barriers with ratings of less than 3 hours

### MOUNTING ANGLES

Secure mounting angles to the sleeve and not to the wall or floor. Mounting angles to frame the four sides of the sleeve on both faces.
When reverse mounting angles are used the size of the opening must be increased to maintain the specified expansion clearance between the angle/fasteners and the opening. Angles shall be a minimum of 1-1/2" x 1-1/2" x 16Ga. On dampers 36 x 50 and smaller. For dampers greater than 36x50, angles to be a minimum of 1-1/2 x 1-1/2 x 14 Ga. Fasten angles to the sleeve using 1/4" dia. Bolts and nuts or by welding with beads 1/2" in length, or with No. 10 steel sheet metal screws, or with 3/16" steel rivets. Fasteners or weld beads shall be 8" maximum on centers.

### ACCESS

Suitable access must be provided for damper inspection and servicing. Where it is not possible to achieve sufficient size access, it will be necessary to install a removable section of duct.

### DUCT CONNECTION

The installation of the damper and all duct connections to the damper sleeve shall conform to NFPA-90A and the SMACNA Fire, Smoke and Radiation Damper Installation Guide. All duct connection shall also conform to UL555. Connecting ducts shall not be continuous but shall terminate at the damper sleeve. Duct connections to the sleeve will be either of the breakaway or rigid types, breakaway types are listed below. The following determines if the connections are to be rigid or breakaway. For rigid type duct connections, sleeve shall be a minimum of 16 GA on dampers not exceeding 36" wide or 24" high or 24" diameter and 14ga on larger units. Dampers supplied with thinner sleeves will require a breakaway connection of the following type.
Plain "S" slip, double "S" slip shown below.
Ductmate type-connections as shown on figure 6. All connections not listed as breakaway shall be considered as rigid. Breakaway joints of the types shown below shall have no more than two No.10 (4.8mm) diameter sheet metal screws on each side and on the top and bottom located in the center of the slip pocket and shall penetrate both sides of the slip pocket.
Breakaway joints of the type shown below are permitted on the top and bottom of horizontal ducts (vertical dampers) with flat slips not exceeding 20 inches (508mm) in length on the sides.

### MAINTENANCE

Dampers shall be maintained in intervals as stated in NFPA-90A, Appendix B, unless local codes require more frequent inspections. Check the fuse link, check the stainless steel closure springs where furnished, cycle damper and check for free operation and complete closure , clean with mild detergent or solvent, secure damper open with fusible link.

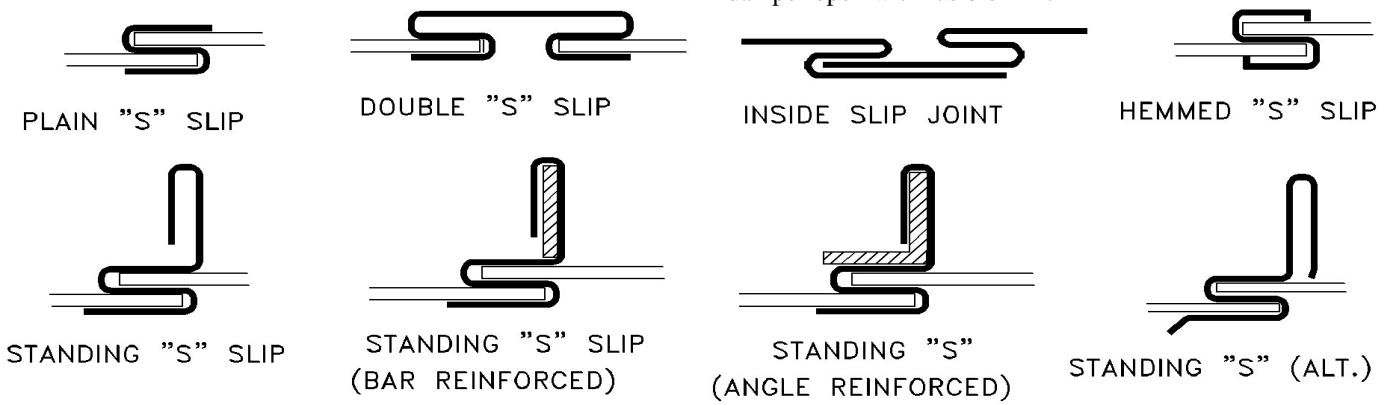


Figure 6

INSTALLATION INSTRUCTIONS IN CONFORMANCE TO UNDERWRITERS LABORATORIES REQUIREMENTS

231 Commerce Dr. Montgomeryville, PA 18936
Tel: 215-412-4445 Fax: 215-412-4409
Email: lloydind@firedamper.com

138 Industrial Loop West, Orange Park, FL 32073
Tel: 904-541-1655 Fax: 904-541-1657
Email: lloydind1@firedamper.com

B1, 4/F., Luen Ming Hing Factory Building
36 Mok Cheong St.,
To Kwa Wan, Kowloon, H. K.
Tel: 852-2760-4188 Fax: 852-2760-4177
Email: tatanlexyim@lloydasia.com

Website: www.firedamper.com

*ALL STATED SPECIFICATIONS ARE SUBJECT TO UPDATE WITHOUT NOTICE OR OBLIGATION.



Lloyd Industries Inc. 2017

# DAMPER INSTALLATION INSTRUCTIONS

## Installation and Maintenance Instructions
## 1-1/2 Hours Rated, UL Classified model 75 fire dampers
## For use in fire barriers with ratings of less than 3 hours

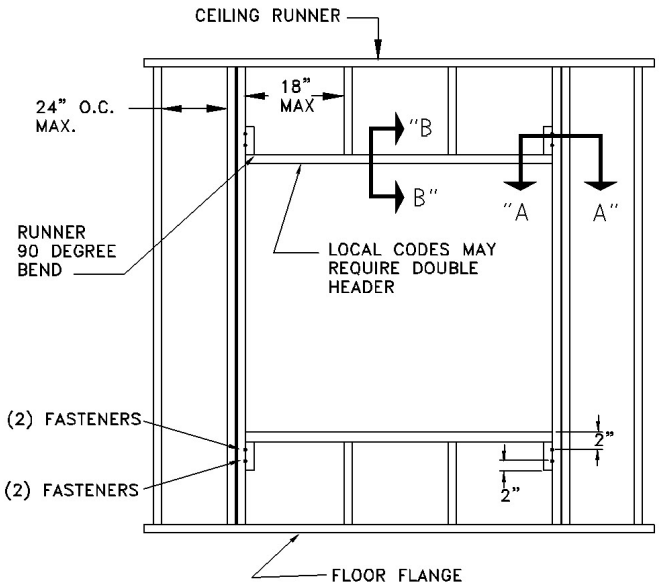


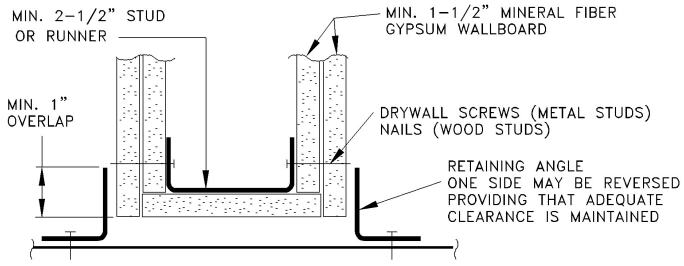


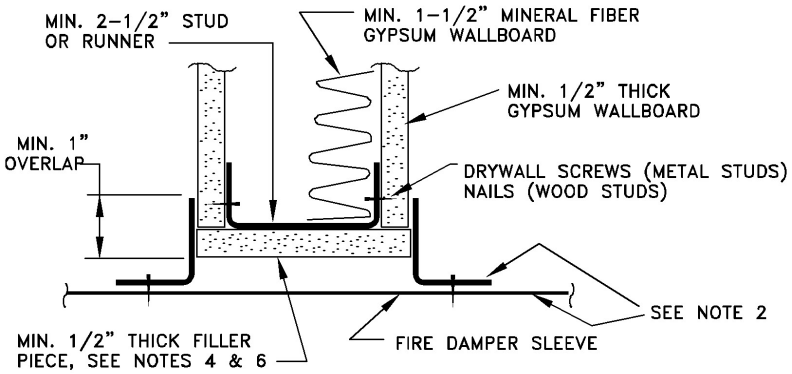


1 HOUR RATED PARTITION WALL
SECTION "B-B"

NOTES:

1. These illustrated partition designs have successfully been tested in conjunction with 1-1/2 hour classified fire dampers, for additional designs, reference Underwriters Laboratories, Inc. Fire Resistance Directory. Specific framing requirements of openings may vary with the local authority that has jurisdiction. Specific framing requirements should be provided in the architectural and structural drawing.
2. Reference the damper's installation instructions regarding the approved method of attaching the damper to the sleeve, attaching the retaining angles to the sleeve, required expansion clearances, sleeve gauge, ect. Type of framing does not effect the stated required expansion clearance.
3. Gypsum panels surrounding the opening are to be fastened to all stud and runner flanges, 12" O.C. maximum.
4. When wooden studs are used, filler pieces must be installed around the entire opening. Filler pieces are optional when metal studs are used ( consult local codes to determine if filler pieces are required). Filler pieces are to be double screwed (or nailed to wooden studs) on 12" max. centers to the web of runners and studs.
5. The office of the California State Fire Marshal and other local jurisdictions require filler pieces around both wood and metal framed openings (no filler pieces around concrete or masonry openings) These codes also require a double header for wood framed openings, consult local code authorities.
6. Double jamb studding shown and required when opening width or height exceeds 36". Single jamb studding acceptable for openings 36'x36" and smaller.

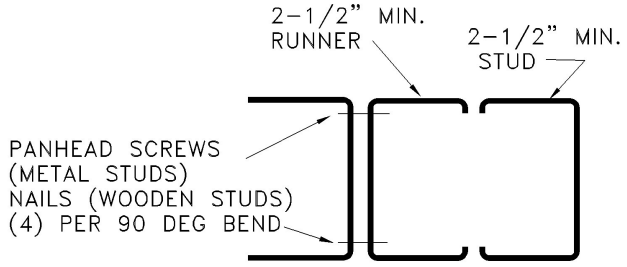


SECTION "A-A"

INSTALLATION INSTRUCTIONS IN CONFORMANCE TO UNDERWRITERS LABORATORIES REQUIREMENTS

231 Commerce Dr. Montgomeryville, PA 18936
Tel: 215-412-4445 Fax: 215-412-4409
Email: lloydind@firedamper.com

138 Industrial Loop West, Orange Park, FL 32073
Tel: 904-541-1655 Fax: 904-541-1657
Email: lloydind1@firedamper.com

B1, 4/F., Luen Ming Hing Factory Building
36 Mok Cheong St.,
To Kwa Wan, Kowloon, H. K.
Tel: 852-2760-4188 Fax: 852-2760-4177
Email: tatanlexyim@lloydasia.com

Website: www.firedamper.com

*ALL STATED SPECIFICATIONS ARE SUBJECT TO UPDATE WITHOUT NOTICE OR OBLIGATION.



Lloyd Industries Inc. 2017

# SLEEVE INSTALLATION INSTRUCTIONS

## BREAKAWAY CONNECTIONS

Transverse joints illustrated at right have always been approved as breakaway connections. SMACNA testing has also approved the following variations as breakaway connections.

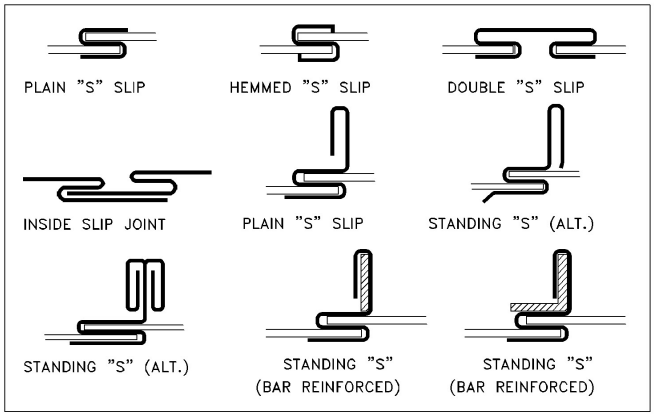


Standing "S" joints can be applied with no. 10 sheet metal screws (through joint and duct) subject to the following limitations: Maximum 2 screws in each side and in bottom joint.

Transverse joints illustrated can be applied as top and bottom joints with Drive slip - side joints in duct heights up to 20 inches.




Round and Oval duct Breakaway Connections

Round or flat oval ducts connected to type R, CR or CO damper collars may use no.10 sheet metal screws as follows:
Ducts to 22" wide (or dia.) and smaller may use 3 screws.
Ducts larger that 22" wide (or dia.) may use 5 screws.
NOTE: All breakaway connections described may have duct sealant applied in accordance with SMACNA recommendations.

---

Manufactured Flanged System
Breakaway Connections

Flanged connection systems manufactured by Ductmate, ward, and nexus are approved as breakaway connections when installed as

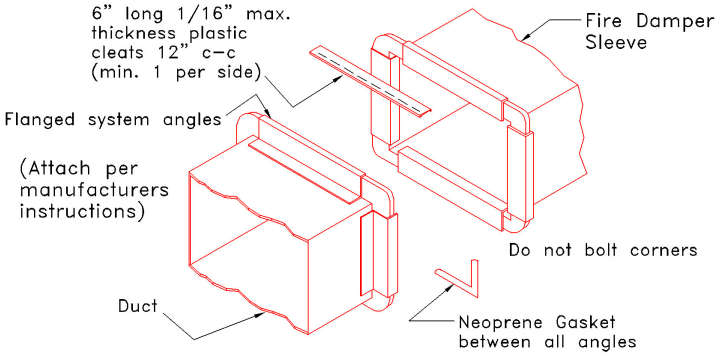


INSTALLATION INSTRUCTIONS IN CONFORMANCE TO UNDERWRITERS LABORATORIES REQUIREMENTS

---

Proprietary Flange System
Breakaway Connections
(TDC by Lockformer, TDF by Engle

TDC and TDF systems are approved as breakaway connections when installed as described in the TDC or TDF addendum to the SMACNA Duct Construction Standards except the corners may not be bolted. Standard 6" metal clip may be used with spacing as shown in diagram.

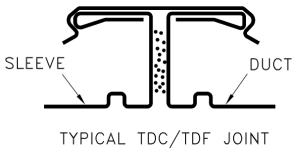

TYPICAL TDC/TDF JOINT

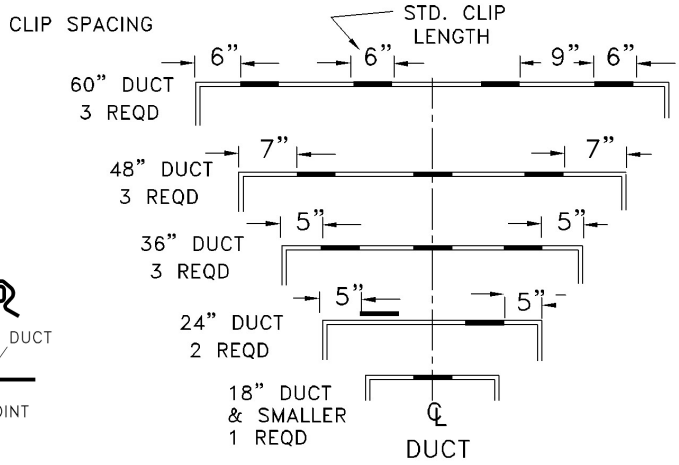


231 Commerce Dr. Montgomeryville, PA 18936
Tel: 215-412-4445 Fax: 215-412-4409
Email: lloydind@firedamper.com

138 Industrial Loop West, Orange Park, FL 32073
Tel: 904-541-1655 Fax: 904-541-1657
Email: lloydind1@firedamper.com

B1, 4/F., Luen Ming Hing Factory Building
36 Mok Cheong St.,
To Kwa Wan, Kowloon, H. K.
Tel: 852-2760-4188 Fax: 852-2760-4177
Email: tatanlexyim@lloydasia.com

Website: www.firedamper.com

*ALL STATED SPECIFICATIONS ARE SUBJECT TO UPDATE WITHOUT NOTICE OR OBLIGATION.



Lloyd Industries Inc. 2017

# DAMPER INSTALLATION INSTRUCTIONS

## MULLION INSTALLATION INSTRUCTIOS FOR FIRE DAMPERS INSTALLED OVERSIZED WALL OPENINGS

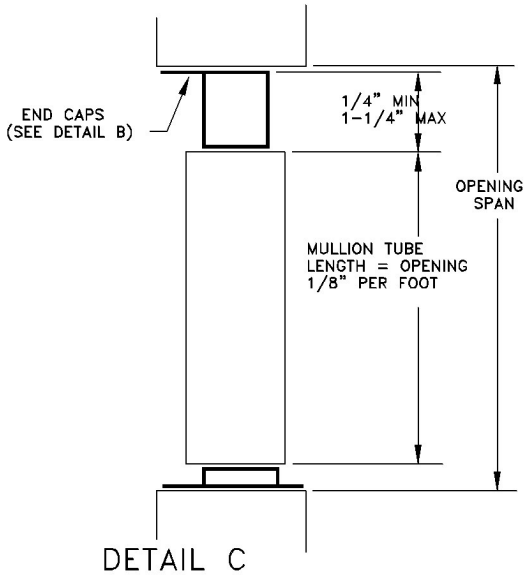


DETAIL C

The end caps are attached by means of 1" long x 3/8" dia. Steel expansion anchors embedded into the opening with 1/4" dia. Flat head machine screws, eight per end cap. If a steel lintel is used, four 1" long welds per end cap (two per leg) may be used.

used, four 1" long welds per end cap
(two per leg) may be used.

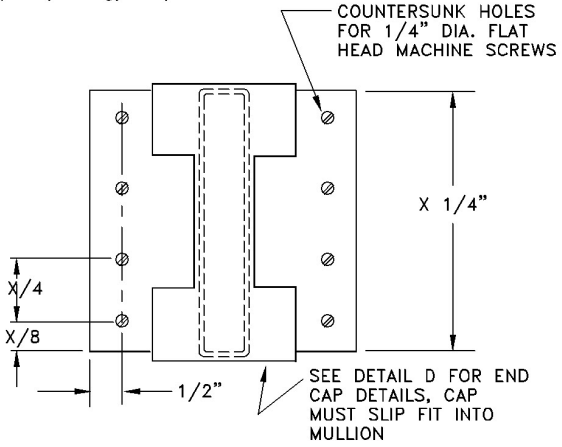


DETAIL E
END CAP INSERTED INTO MULLION

All horizontal and vertical mullion tubes must be terminated with an end cap. These end caps may not be fastened to the mullion tube and must slide freely inside the mullion tube.

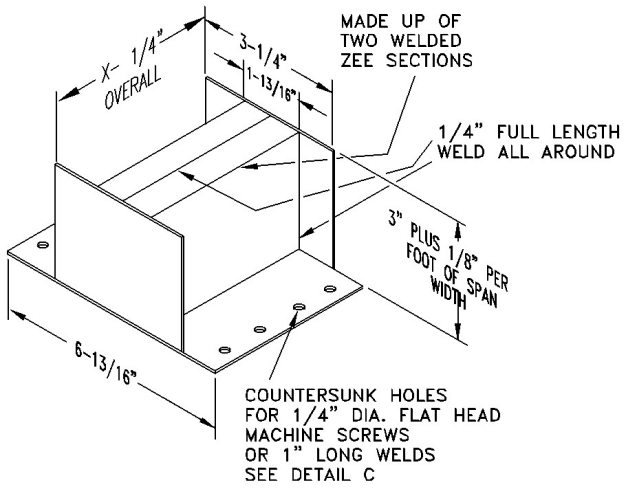


DETAIL D
Top, bottom or side end caps
12 GA galvanized steel

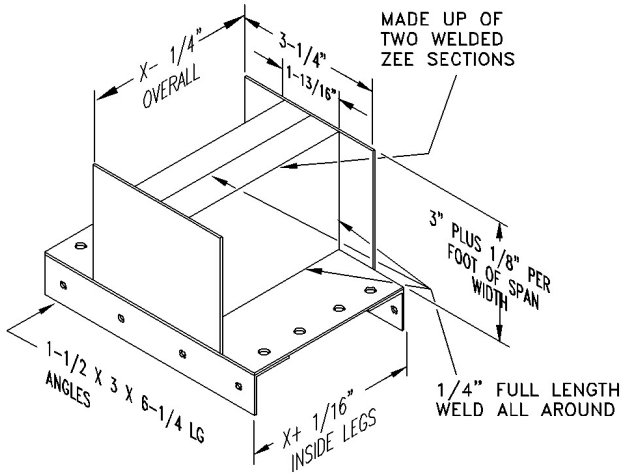


DETAIL F
Horizontal to vertical end cap 12 ga.
galvanized steel

Attach the horizontal mullion end caps to the vertical mullion tube by means of (12) 3/16" dia. Blind rivets or by 1/8" full length weld.

CLASSIFIED UL C US

INSTALLATION INSTRUCTIONS
IN CONFORMANCE TO
UNDERWRITERS LABORATORIES
REQUIREMENTS

231 Commerce Dr. Montgomeryville, PA 18936
Tel: 215-412-4445 Fax: 215-412-4409
Email: lloydind@firedamper.com

138 Industrial Loop West, Orange Park, FL 32073
Tel: 904-541-1655 Fax: 904-541-1657
Email: lloydind1@firedamper.com

B1, 4/F., Luen Ming Hing Factory Building
36 Mok Cheong St.,
To Kwa Wan, Kowloon, H. K.
Tel: 852-2760-4188 Fax: 852-2760-4177
Email: tatanlexyim@lloydasia.com

Website: www.firedamper.com

*ALL STATED SPECIFICATIONS ARE SUBJECT TO UPDATE WITHOUT NOTICE OR OBLIGATION.



Lloyd Industries Inc. 2017

# DAMPER INSTALLATION INSTRUCTIONS

## MULLION INSTALLATION INSTRUCTIOS FOR FIRE DAMPERS INSTALLED OVERSIZED WALL OPENINGS

These fabricated galvanized steel mullions are intended to subdivide a large vertical wall opening into smaller openings. These smaller openings are not to exceed the maximum size restrictions of the UL Classified 1-1/2 hour galvanized steel fire damper assembly.

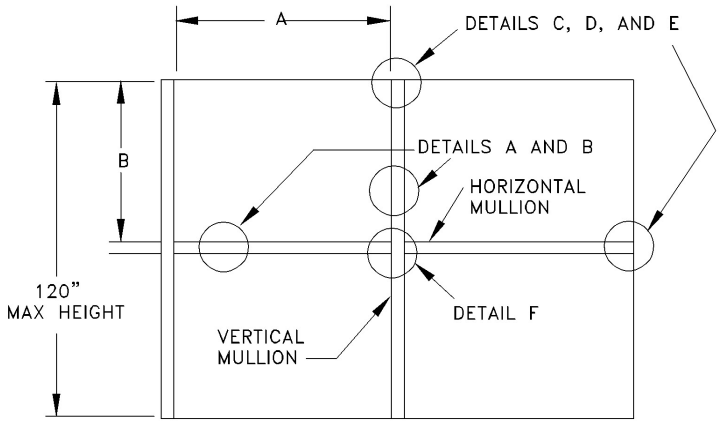


"A" and "B" opening sizes are not to exceed the damper's approved maximum multiple assembly size. Vertical, horizontal, or vertical and horizontal mullion can be used, depending on the opening size.

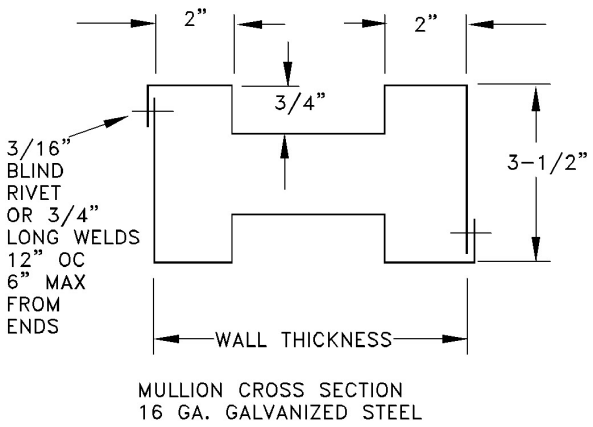


DETAIL A

CONDITIONS & RESTRICTIONS

Fabricated from galvanized steel with a normal yield strength of 42,000 psi.
Intended for use in concrete block or poured walls only with a minimum wall thickness of 7" and a maximum wall thickness of 12"
To permit proper embedding of anchors, hollow concrete block walls are to be filled at the opening by minimum 3,500 psi concrete.
Steel mullions are not to be inside the ductwork. For ducted systems, each sub-divided opening must be individually ducted.

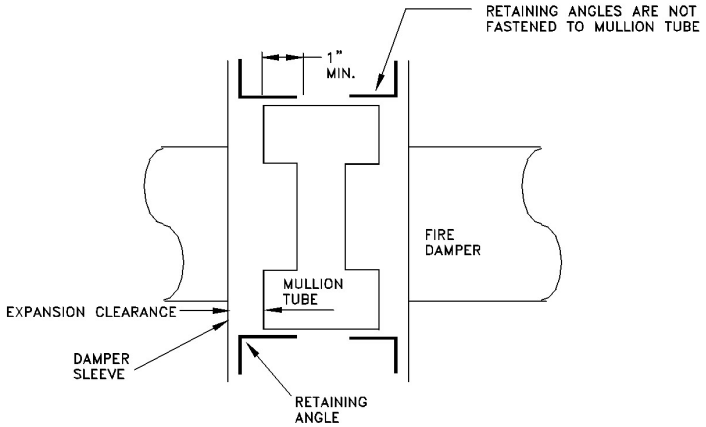


DETAIL B

INSTALLATION INSTRUCTIONS IN CONFORMANCE TO UNDERWRITERS LABORATORIES REQUIREMENTS

Reference the damper's installation instructions regarding the approved method of attaching the damper to the sleeve, attaching the retaining angles to the sleeve, required expansion clearances, sleeve gauge, ect.

231 Commerce Dr. Montgomeryville, PA 18936
Tel: 215-412-4445 Fax: 215-412-4409
Email: lloydind@firedamper.com

138 Industrial Loop West, Orange Park, FL 32073
Tel: 904-541-1655 Fax: 904-541-1657
Email: lloydind1@firedamper.com

B1, 4/F., Luen Ming Hing Factory Building
36 Mok Cheong St.,
To Kwa Wan, Kowloon, H. K.
Tel: 852-2760-4188 Fax: 852-2760-4177
Email: tatanlexyim@lloydasia.com

Website: www.firedamper.com

*ALL STATED SPECIFICATIONS ARE SUBJECT TO UPDATE WITHOUT NOTICE OR OBLIGATION.



Lloyd Industries Inc. 2017

# SLEEVE INSTALLATION INSTRUCTIONS

Attaching Fire Dampers to Sleeves

Fire dampers must be attached to sleeves as shown in Fig. 1. All four sides of the damper frame must be attached to the sleeve with one row of attachments on each side of the blade channel. Attachments must be spaced a maximum of 6" on centers and a maximum of 2" from corners. A minimum of 4 attachments (2 on each side of the blade channel) per side (16 per damper) are required. One of the methods of attachment shown below must be used.

- tack or spot welds
- No.10 sheet metal screws
- 1/4" bolts and nuts
- 3/16" steel pop rivets

NOTE:
Attachment must not enter blade channel or they may cause interference with blade closure. Narrow line and ultra thin dampers do not have flange for attachments and must be welded to sleeve.

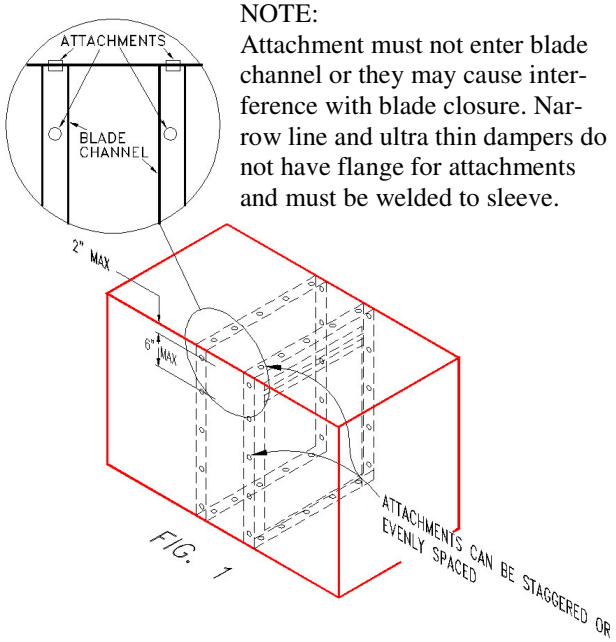


FIG. 1

Securing Fire Damper and Sleeves to Wall and Floor Openings

Fire damper and sleeve assemblies must be installed in wall and floor openings using retaining angles on each side of the wall or floor as described below:

- Retaining angles must be a minimum of 16 gauge steel and have a minimum of 1-1/2" x 1-1/2" legs.
- Retaining angles must be attached to the sleeve using the procedures and methods described in section 3. The angles must be attached to all 4 sides of the sleeve with butt joints at each corner. A minimum of two attachments are required on each side, top and bottom. The angles need not be attached to each corner. A minimum of two attachments are required on each side, top and bottom. The angles need not be attached to each other at the corners.
- Retaining angles must completely cover the clearance space between the sleeve and the wall/ floor opening, plus overlap the wall/floor a minimum of 1". This coverage includes all corners (fig. 2).
- Retaining angles should not be fastened to the wall/ floor material. The angles should only sandwich the wall/floor and allow for damper/sleeve expansion during periods of intense heat.
- For grille installation, angle legs may be reversed and one leg inserted into the wall/floor opening providing the required clearance is maintained between angle leg fasteners and the wall/ opening.

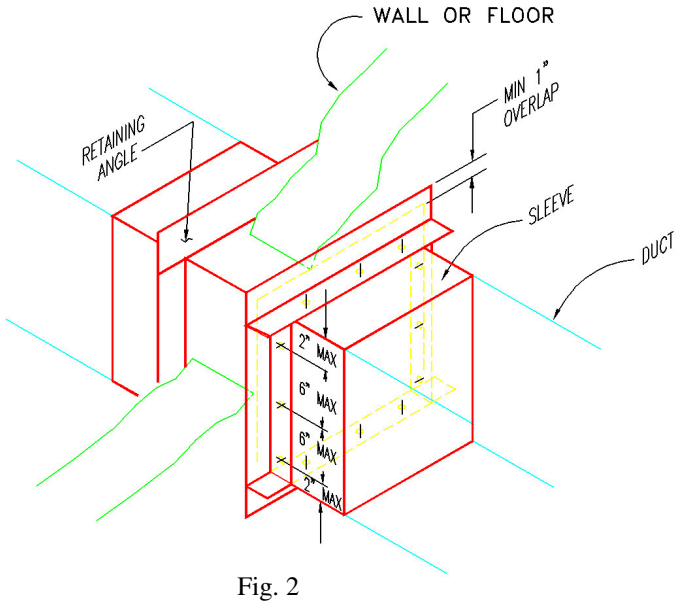


Fig. 2

Multiple section fire dampers
When multiple sections are shipped unassembled, installer shall fasten dampers together.

INSTALLATION INSTRUCTIONS IN CONFORMANCE TO UNDERWRITERS LABORATORIES REQUIREMENTS

231 Commerce Dr. Montgomeryville, PA 18936
Tel: 215-412-4445 Fax: 215-412-4409
Email: lloydind@firedamper.com

138 Industrial Loop West, Orange Park, FL 32073
Tel: 904-541-1655 Fax: 904-541-1657
Email: lloydind1@firedamper.com

B1, 4/F., Luen Ming Hing Factory Building
36 Mok Cheong St.,
To Kwa Wan, Kowloon, H. K.
Tel: 852-2760-4188 Fax: 852-2760-4177
Email: tatanlexyim@lloydasia.com

Website: www.firedamper.com

*ALL STATED SPECIFICATIONS ARE SUBJECT TO UPDATE WITHOUT NOTICE OR OBLIGATION.



Lloyd Industries Inc. 2017

# SINGLE SIDE RETAINING ANGLE

## INSTALLATION INSTRUCTIONS
## VERTICAL OR HORIZONTAL MOUNT 1-1/2 OR 3 HR RATING

"Lloyd Rapid Mounting Angles" (For use on one sided angle installations)
These instructions apply to 1-1/2 or 3Hours rated combination fire/smoke, smoke, dynamic, curtain fire dampers and fire doors mounted in masonry, block, or metal, stud walls and floor.
Angles shall be a minimum of 1-1/2" x 1-1/2" x 16 gauge for openings in metal stud, and concrete/ masonry walls and floors of 48"x36" and less. Mounting angles are only required on one side of the wall or top of the floor. They must be attached to both the sleeve and the wall. Mounting angles may be installed directly to the metal stud under the wall board on metal installations only. Size larger will require the previous retaining angle design which consisted of 4 separate angles per side.
For one sided Lloyd Rapid Mounting Angle installations, the sleeve fasteners shall be no. 10 sheet metal screws spaced 3" from each end and no greater than 12" on center.
With a minimum of two(2) fasteners on each side, top and bottom.
Wall/floor fasteners shall be no. 10 sheet metal screws 2" long, two screws on each side angle spaced 3 inches from each end; three screws on each head and sill angle with one screw in the center and one at each end spaced 3 inches from the ends.
Screw fasteners used in metal stud must engage the metal stud a minimum of 1/2"
Screw fasteners used in masonry walls or floors must engage the wall or floor a minimum of 2".
Angles should overlap the partition a minimum of 1" around the entire opening.
Installation per NFPA.90A, UL555, and SMACNA Fire Smoke and Radiation Installation Guide.

FASTENERS MUST BE PLACED WHERE THEY DO NOT INTERFERE WITH THE DAMPER OPERATION.

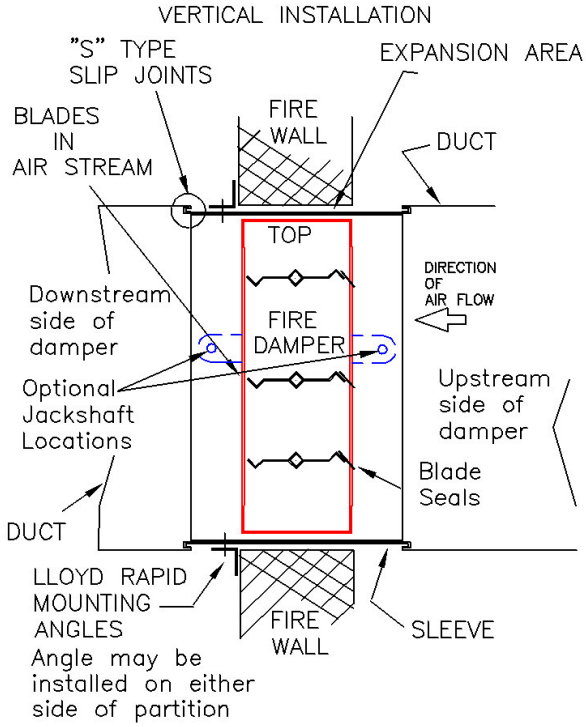


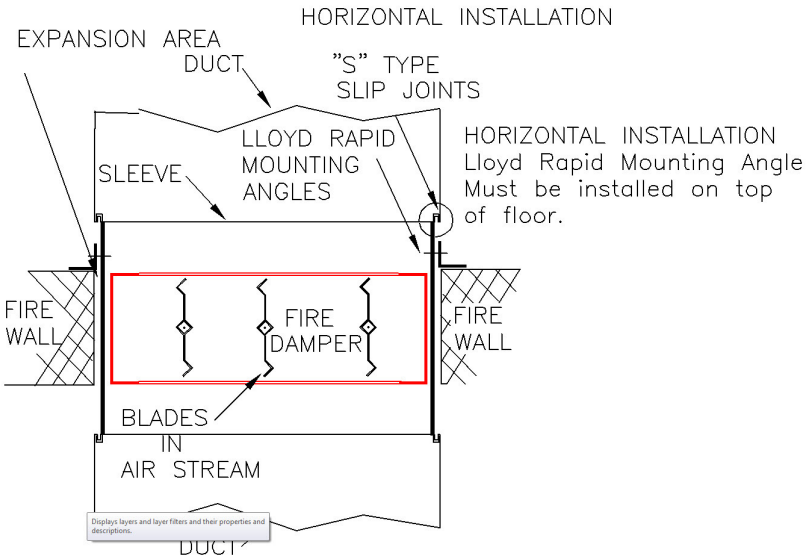


INSTALLATION INSTRUCTIONS IN CONFORMANCE TO UNDERWRITERS LABORATORIES REQUIREMENTS

231 Commerce Dr. Montgomeryville, PA 18936
Tel: 215-412-4445 Fax: 215-412-4409
Email: lloydind@firedamper.com

138 Industrial Loop West, Orange Park, FL 32073
Tel: 904-541-1655 Fax: 904-541-1657
Email: lloydind1@firedamper.com

B1, 4/F., Luen Ming Hing Factory Building
36 Mok Cheong St.,
To Kwa Wan, Kowloon, H. K.
Tel: 852-2760-4188 Fax: 852-2760-4177
Email: tatanlexyim@lloydasia.com

Website: www.firedamper.com

*ALL STATED SPECIFICATIONS ARE SUBJECT TO UPDATE WITHOUT NOTICE OR OBLIGATION.



Lloyd Industries Inc. 2017

# LLOYD INDUSTRIES INC.

WWW.FIREDAMPER.COM

# DAMPER INSTALLATION INSTRUCTIONS

**1-1/2 hour rated, UL classified model 75 fire dampers**
**For use in fire barriers with ratings of less than 3hours**
**"Fast mount" single side mounting angles**
**METAL STUD WALL WITH THRU DUCTING**

## INSPECTION

Inspect for shipping damage.
Inspect for proper size and model.
Inspect installed damper for proper orientation, as stated on damper label.
Inspect for obstruction which could interfere with free operation and complete closure.
Manually cycle the damper to verify proper operation.

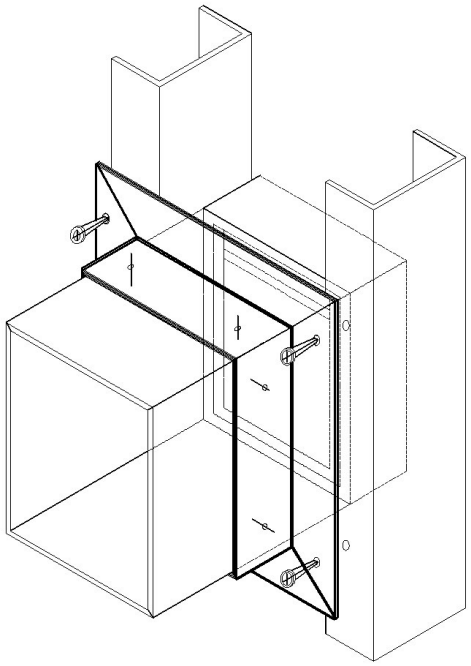

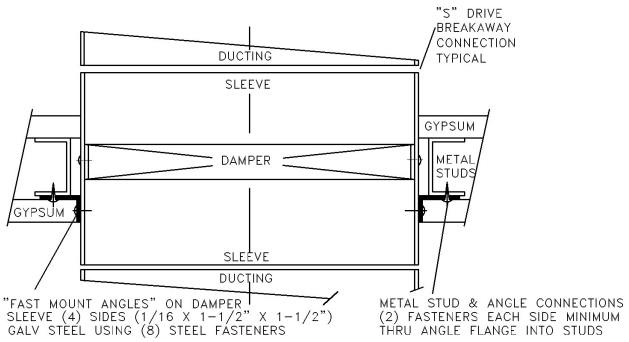


## INSTALLATION

The basic intent of a proper installation is to secure the fire damper in, not to, the opening in such a manner as to prevent distortion and disruption of the damper operation by allowing the fire damper in openings to expand and the connecting duct to separate in the event of the collapse of the hanging system. The fire damper must be positioned within the masonry, block or gypsum wallboard fire barrier.

## DAMPER TO SLEEVE ATTACHMENT

A Sleeve shall be used of sufficient length to permit direct attachment of perimeter mounting angles. This damper can be supplied by the factory mounted in a sleeve. If the sleeve is not factory supplied, it must be attached on both sides of the damper by one of the following methods:
Secure with 1/4" dia. Bolts and nuts or by welding with beads 1/2" in length, or with No.10 steel sheet metal screws, or 3/16" steel rivets. Fasteners shall be 8" maximum on centers. Fasteners cannot be placed where they will interfere with damper operation. Gaps at corners between the damper and its sleeve must be small enough to prohibit the passage of an 1/8" diameter rod through the entire depth of the gap between two damper panels and its sleeve.

## METAL STUD & MOUNT ANGLE ATTACHMENT

Secure "Fast Mount Angles" to sleeve & metal studs using the following options (8) connections on sleeve to angles: (2) connections on each parallel angle as a minimum. Mounting Angles may be mounted over or under drywall.

1. Steel sheet metal screws #8 to #12
2. Steel rivets 3/16" diameter "Pop, Hollow, or Solid."
3. Steel Bolts & Nuts 1/4" diameter or greater.
4. Welding using 1/2" lg beads min.
5. Spot welding

## SLEEVE THICKNESS

Sleeves shall be the same gauge or heavier as the duct to which it is attached. Gauges shall conform to SMACNA or ASHRAE duct standards. Damper sleeve can be no thicker than 10Ga. steel. On type C dampers, the sleeve must be 20Ga. or heavier.

## EXPANSION CLEARANCE

The opening in the wall or floor for the fire damper shall be sized so as to provide expansion clearance between the sleeve and opening. Clearances do not vary with walls constructed of different materials. A minimum of 1/8" per foot of overall damper/sleeve width and height is required. The maximum opening size shall not exceed 1/8".

CLASSIFIED C UL US

INSTALLATION INSTRUCTIONS IN CONFORMANCE TO UNDERWRITERS LABORATORIES REQUIREMENTS


231 Commerce Dr. Montgomeryville, PA 18936
Tel: 215-412-4445 Fax: 215-412-4409
Email: lloydind@firedamper.com

138 Industrial Loop West, Orange Park, FL 32073
Tel: 904-541-1655 Fax: 904-541-1657
Email: lloydind1@firedamper.com

B1, 4/F., Luen Ming Hing Factory Building
36 Mok Cheong St.,
To Kwa Wan, Kowloon, H. K.
Tel: 852-2760-4188 Fax: 852-2760-4177
Email: tatanlexyim@lloydasia.com

Website: www.firedamper.com



*ALL STATED SPECIFICATIONS ARE SUBJECT TO UPDATE WITHOUT NOTICE OR OBLIGATION.





Lloyd Industries Inc. 2017

# DAMPER INSTALLATION INSTRUCTIONS

## TRANSFER OPENINGS AND DUCT TERMINALS
## FOR 1-1/2 HOUR AND 3HOUR CURTAIN FIRE DAMPERS
## 75A DAMPERS

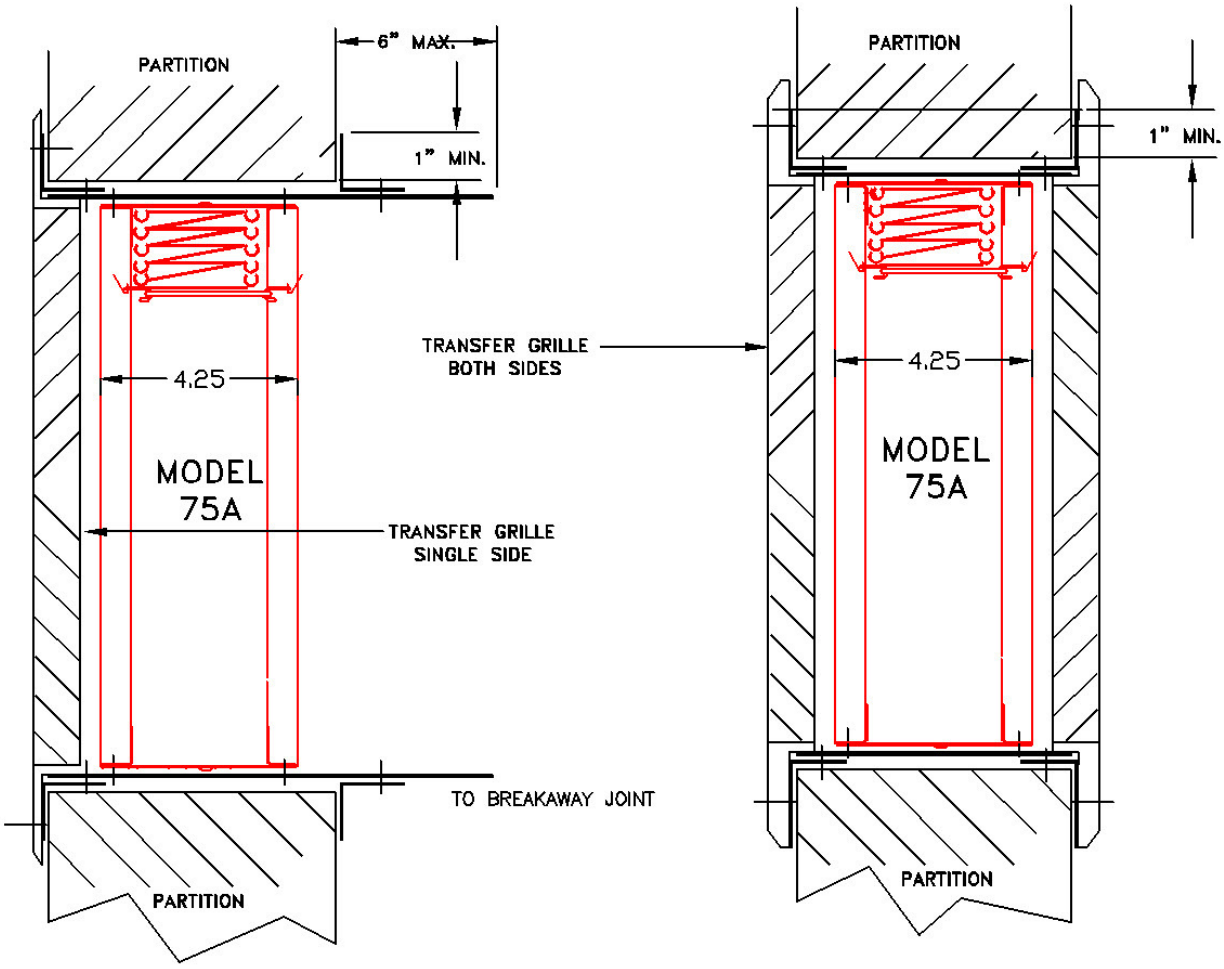


1. Perimeter mounting angles to be a minimum of 1-1/2" x 1-1/2" x 16 Ga. on dampers 36" x 50" and smaller. For dampers greater than 36" x 50", angles to be a minimum of 1-1/2" x 1-1/2" x 14Ga.
2. Grille to flange fasteners cannot penetrate the fire wall.
3. Secure angles to sleeve only, so as to frame the wall opening. Fasten to the sleeve only using the same means as required for fastening the damper to the sleeve.
4. Grille to flange attachment by means of 1/4" dia. Pop rivets, #8 sheet metal screws or #8 bolts and nuts. Fasteners to be plated steel or stainless steel, minimum two fasteners per side.

INSTALLATION INSTRUCTIONS
IN CONFORMANCE TO
UNDERWRITERS LABORATORIES
REQUIREMENTS

231 Commerce Dr. Montgomeryville, PA 18936
Tel: 215-412-4445 Fax: 215-412-4409
Email: lloydind@firedamper.com

138 Industrial Loop West, Orange Park, FL 32073
Tel: 904-541-1655 Fax: 904-541-1657
Email: lloydind1@firedamper.com

B1, 4/F., Luen Ming Hing Factory Building
36 Mok Cheong St.,
To Kwa Wan, Kowloon, H. K.
Tel: 852-2760-4188 Fax: 852-2760-4177
Email: tatanlexyim@lloydasia.com

Website: www.firedamper.com

*ALL STATED SPECIFICATIONS ARE SUBJECT TO UPDATE WITHOUT NOTICE OR OBLIGATION.



Lloyd Industries Inc. 2017

# DAMPER INSTALLATION INSTRUCTIONS

## TRANSFER OPENINGS AND DUCT TERMINALS
## FOR 1-1/2 HOUR AND 3HOUR CURTAIN FIRE DAMPERS
## 75D DAMPERS

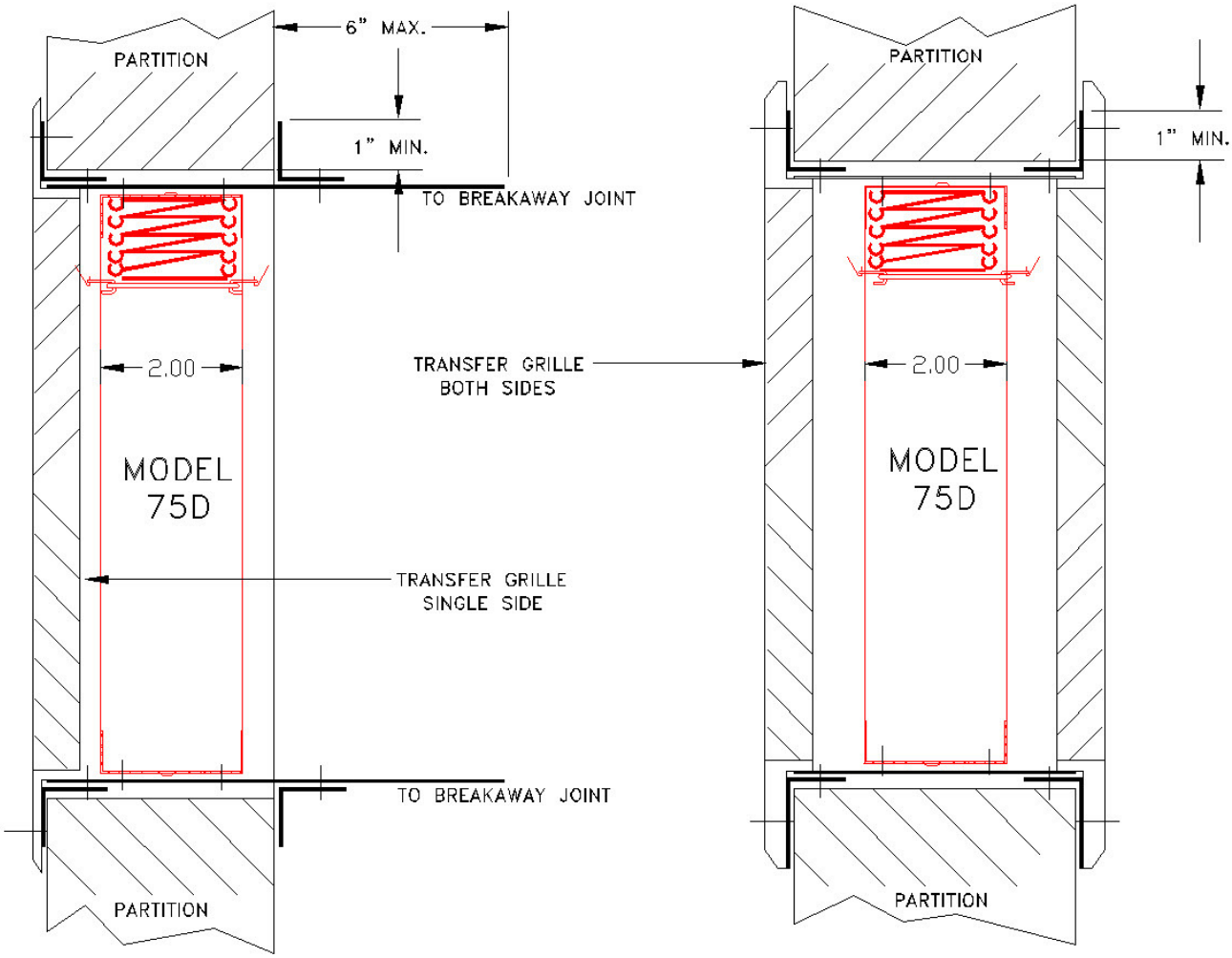


1. Perimeter mounting angles to be a minimum of 1-1/2" x 1-1/2" x 16 Ga. on dampers 36" x 50" and smaller. For dampers greater than 36" x 50", angles to be a minimum of 1-1/2" x 1-1/2" x 14Ga.
2. Grille to flange fasteners cannot penetrate the fire wall.
3. Secure angles to sleeve only, so as to frame the wall opening. Fasten to the sleeve only using the same means as required for fastening the damper to the sleeve.
4. Grille to flange attachment by means of 1/4" dia. Pop rivets, #8 sheet metal screws or #8 bolts and nuts. Fasteners to be plated steel or stainless steel, minimum

INSTALLATION INSTRUCTIONS
IN CONFORMANCE TO
UNDERWRITERS LABORATORIES
REQUIREMENTS

231 Commerce Dr. Montgomeryville, PA 18936
Tel: 215-412-4445 Fax: 215-412-4409
Email: lloydind@firedamper.com

138 Industrial Loop West, Orange Park, FL 32073
Tel: 904-541-1655 Fax: 904-541-1657
Email: lloydind1@firedamper.com

B1, 4/F., Luen Ming Hing Factory Building
36 Mok Cheong St.,
To Kwa Wan, Kowloon, H. K.
Tel: 852-2760-4188 Fax: 852-2760-4177
Email: tatanlexyim@lloydasia.com

Website: www.firedamper.com

*ALL STATED SPECIFICATIONS ARE SUBJECT TO UPDATE WITHOUT NOTICE OR OBLIGATION.



Lloyd Industries Inc. 2017



# LLOYD INDUSTRIES INC.


231 Commerce Dr.
Montgomeryville, PA 18936
Tel: 215-412-4445
Fax: 215-412-4409
Email: lloydind@firedamper.com

138 Industrial Loop West
Orange Park, FL 32073
Tel: 904-541-1655
Fax: 904-541-1657
Email: lloydind1@firedamper.com

B1, 4/F., Luen Ming Hing Factory Building
36 Mook Cheong St.
To Kwa Wan, Kowloon, H.K.
Tel: 852-2760-4188
Fax: 852-2760-4177
Email: tatanlexyim@lloydasia.com

www.firedamper.com