LK-LOPTB
May 2008

Replaces LK-CUCTB, April 2007

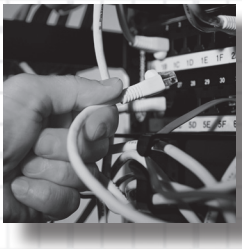

Compak Unit Coolers
Technical Guide

Models LCA - Air Defrost
LCE - Electric Defrost
LCH - Hot Gas Defrost

www.larkinproducts.

Table of Contents

Nomenclature 2
Features & Benefits 3
Performance Data & Specifications
- Air Defrost 4-5
- Electric Defrost 6-7
- Hot Gas Defrost 8-9

Physical Data 10-11
Dimensional Data 12
Hot Gas Reverse Cycle Kits 13-14
3-Pipe Hot Gas Defrost 15
Replacement Parts by InterLink™ 16
Standard Nozzle Selection 17

Energy Solutions

We have made a commitment to customer needs, innovation and environmental stewardship and have dedicated ourselves to delivering energy-efficient choices. PSC and EC motors will reduce costs, improve the bottom line and enhance equipment performance and service life.

Choose the most energy-efficient motor available for evaporators.

The EC motor is an Energy Solutions® option on new Larkin Compak unit coolers. Available on all new equipment or as an easy-to-install, drop-in replacement aftermarket part from InterLink™ Commercial Refrigeration Parts. Because they're a drop-in replacement for existing shaded pole and PSC motors, installation is quick and easy. It's a **high impact, quick payback solution** for reducing costs and achieving green initiatives **without replacing the entire system**.

EC motors by InterLink are **up to 75% efficient** - that's a **51-59% increase over shaded pole motors** and a **30-35% increase over permanent-split capacitor (PSC) motors**. With all of this added efficiency, you can count on more **energy savings and lower operational costs** while taking a step in the right direction toward conserving our planet's resources.

To learn more about EC motors, visit **www.interlinkparts.com/ec**.

LC	A6	120	A	K
Model Series	**Model Type**	**Capacity**	**Electrical Code**	**Design Revision**
LC = Larkin Compak Unit Cooler	A6 = Air defrost E6 = Electric defrost, 6 FPI E4 = Electric defrost, 4 FPI H6 = Hot gas defrost, 6 FPI H4 = Hot gas defrost, 4 FPI	# x 100 = BTUH	A = 115/1/60 B = 208-230/1/60 C = 208-230/3/60 M = 460/1/60 AH = 115/1/60 (PSC) BH = 208-230/1/60 (PSC) AE = 115/1/60 (EC) BE = 208-230/1/60 (EC) CE = 208-230/3/60 (EC)	

©2008 Heatcraft Refrigeration Products LLC

Features & Benefits

Cabinet

- Minimal height of the low profile series makes it ideal for low ceiling coolers
- Attractive white cabinet
- Cabinet design features front access panels on each side for easy access to electrical and refrigeration components
- All electrical components factory wired to terminal board and identified, making it easy to field wire the unit
- Sweat connections to reduce potential for leaks
- Internal panels are isolated for quiet operation
- Liquid line solenoid wire harness is factory-installed for quick installation
- Pre-drilled holes on the back of the unit for room thermostat

Coil

- Internally enhanced tubing and fin design for higher efficiency
- Coil heater slots have been enlarged for easier installation and replacement
- Reduced heater wattages
- Hot gas loop on bottom of coil for easier access is standard for hot gas defrost models
- Fixed defrost termination for electric, adjustable defrost termination for hot gas

Drain Pan

- Large diameter drain hole (3/4" ID) is located on the back of the unit
- Extended drain pan heaters for more uniform defrost throughout the drain pan and additional heat in end compartments
- On 4-6 fan models, drain pan has a lanyard for easy and safe access

Motors

- Motors plug into wiring harness for easier servicing
- EC motors available factory-installed or as a drop-in replacement through InterLink™ Commercial Refrigeration Parts in 115/1/60, 208-230/1/60 and 208-230/3/60 unit voltages
- PSC and PSC (Totally Enclosed) motors for 115/1/60, 208-230/1/60 and 460/3/60 unit voltages (standard on 460/1/60 units)
- PSC motors or EC motors required for 50 Hz operation

Options

- Unit Configurations: mounted components, pre-assembled, pre-charged and Beacon II™
  - Units available with mounted TXV and mounted TXV / solenoid valve
  - Pre-assembled units come with mounted TXV, liquid line solenoid valve and room thermostat. Available in a master liquid line configuration
  - Pre-charged units come with mounted TXV, liquid line solenoid valve, room thermostat and quick connect fittings
  - Various room thermostat variations including rear mount and front access versions
  - Beacon II units come with electronic expansion valves, pressure transducer, temperature sensors and Beacon control board
- Most models available with glycol circuiting (see glycol brochure)
- Units available with stainless steel housing and drain pan
- Units available with copper fins. Air defrost units also available with polyester coated fins or various coil coatings options
- Units available with insulated drain pan

Performance Data

Model LCA6 Air Defrost | 60 Hz

Model	Capacity		Fan Data		
	10°F TD 25°F SST	6°C TD -4°C SST	No.	CFM	m³H
	BTUH	Watts			
LCA640	**4,000**	1,170	1	**730**	1,240
LCA651	**5,100**	1,500	1	**700**	1,189
LCA662	**6,200**	1,820	1	**650**	1,104
LCA672	**7,200**	2,110	2	**1,460**	2,481
LCA690	**9,000**	2,640	2	**1,400**	2,379
LCA6110	**11,000**	3,220	2	**1,300**	2,209
LCA6135	**13,500**	3,950	3	**2,100**	3,568
LCA6160	**16,000**	4,690	3	**1,950**	3,313
LCA6185	**18,500**	5,420	4	**2,800**	4,758
LCA6215	**21,500**	6,290	4	**2,600**	4,418
LCA6260	**26,000**	7,610	5	**3,250**	5,522
LCA6310	**31,000**	9,070	6	**3,900**	6,627
LCA6350	**35,000**	10,240	6	**3,900**	6,627

Model LCA6 Air Defrost | 50 Hz †

Model	Capacity		Fan Data		
	10°F TD 25°F SST	6°C TD -4°C SST	No.	CFM	m³H
	BTUH	Watts			
LCA640	**3,800**	1,112	1	**670**	1,117
LCA651	**4,845**	1,417	1	**630**	1,071
LCA662	**5,890**	1,723	1	**586**	995
LCA672	**6,840**	2,001	2	**1,315**	2,234
LCA690	**8,550**	2,502	2	**1,260**	2,142
LCA6110	**10,450**	3,057	2	**1,170**	1,989
LCA6135	**12,825**	3,752	3	**1,891**	3,213
LCA6160	**19,200**	4,447	3	**1,756**	2,984
LCA6185	**17,575**	5,142	4	**2,521**	4,284
LCA6215	**20,425**	5,976	4	**2,341**	3,978
LCA6260	**24,700**	7,226	5	**2,927**	4,973
LCA6310	**29,450**	8,616	6	**3,512**	5,967
LCA6350	**33,250**	9,728	6	**3,512**	5,967

† *For EC motors, use 60 Hz capacity and airflow values (Units with EC motors operating at 50 Hz will not see a reduction in performance due to the electronic control of the motor)*

Specifications

Model LCA6 Air Defrost | 60 Hz

Model	HP	Shaded Pole Motor				PSC, PSC-TE Motor						EC Motor			
		115/1/60		208-230/1/60		115/1/60		208-230/1/60		460/1/60		115/1/60		208-230/1/60	
		Amps	Watts	Amps	Watts	Amps	Watts	Amps	Watts	Amps	Watts	Amps	Watts	Amps	Watts
LCA640	1/15	**1.8**	116	**1.0**	122	**1.0**	82	**0.5**	91	**0.4**	117	**1.1**	57	**0.6**	59
LCA651	1/15	**1.8**	116	**1.0**	122	**1.0**	82	**0.5**	91	**0.4**	117	**1.1**	57	**0.6**	59
LCA662	1/15	**1.8**	116	**1.0**	122	**1.0**	82	**0.5**	91	**0.4**	117	**1.1**	57	**0.6**	59
LCA672	1/15	**3.6**	232	**2.0**	244	**2.0**	164	**1.0**	182	**0.8**	234	**2.0**	114	**1.1**	118
LCA690	1/15	**3.6**	232	**2.0**	244	**2.0**	164	**1.0**	182	**0.8**	234	**2.0**	114	**1.1**	118
LCA6110	1/15	**3.6**	232	**2.0**	244	**2.0**	164	**1.0**	182	**0.8**	234	**2.0**	114	**1.1**	118
LCA6135	1/15	**5.4**	348	**3.0**	366	**3.0**	246	**1.5**	273	**1.2**	351	**2.9**	171	**1.6**	177
LCA6160	1/15	**5.4**	348	**3.0**	366	**3.0**	246	**1.5**	273	**1.2**	351	**2.9**	171	**1.6**	177
LCA6185	1/15	**7.2**	464	**4.0**	488	**4.0**	328	**2.0**	364	**1.6**	468	**3.8**	228	**2.1**	236
LCA6215	1/15	**7.2**	464	**4.0**	488	**4.0**	328	**2.0**	364	**1.6**	468	**3.8**	228	**2.1**	236
LCA6260	1/15	**9.0**	580	**5.0**	610	**5.0**	410	**2.5**	455	**2.0**	585	**4.7**	285	**2.6**	295
LCA6310	1/15	**10.8**	696	**6.0**	732	**6.0**	492	**3.0**	546	**2.4**	702	**5.6**	342	**3.1**	354
LCA6350	1/15	**10.8**	696	**6.0**	732	**6.0**	492	**3.0**	546	**2.4**	702	**5.6**	342	**3.1**	354

Model LCA6 Air Defrost | 50 Hz

Model	HP	PSC, PSC-TE Motor						EC Motor			
		110/1/50		220/1/50		380/1/50		110/1/50		220/1/50	
		Amps	Watts	Amps	Watts	Amps	Watts	Amps	Watts	Amps	Watts
LCA640	1/15	**1.0**	68	**0.5**	65	**0.4**	82	**1.1**	57	**0.6**	59
LCA651	1/15	**1.0**	68	**0.5**	65	**0.4**	82	**1.1**	57	**0.6**	59
LCA662	1/15	**1.0**	68	**0.5**	65	**0.4**	82	**1.1**	57	**0.6**	59
LCA672	1/15	**2.0**	136	**1.0**	130	**0.8**	164	**2.0**	114	**1.1**	118
LCA690	1/15	**2.0**	136	**1.0**	130	**0.8**	164	**2.0**	114	**1.1**	118
LCA6110	1/15	**2.0**	136	**1.0**	130	**0.8**	164	**2.0**	114	**1.1**	118
LCA6135	1/15	**3.0**	204	**1.5**	195	**1.2**	246	**2.9**	171	**1.6**	177
LCA6160	1/15	**3.0**	204	**1.5**	195	**1.2**	246	**2.9**	171	**1.6**	177
LCA6185	1/15	**4.0**	272	**2.0**	260	**1.6**	328	**3.8**	228	**2.1**	236
LCA6215	1/15	**4.0**	272	**2.0**	260	**1.6**	328	**3.8**	228	**2.1**	236
LCA6260	1/15	**5.0**	340	**2.5**	325	**2.0**	410	**4.7**	285	**2.6**	295
LCA6310	1/15	**6.0**	408	**3.0**	390	**2.4**	492	**5.6**	342	**3.1**	354
LCA6350	1/15	**6.0**	408	**3.0**	390	**2.4**	492	**5.6**	342	**3.1**	354

Performance Data

Model LCE6/LCE4 Electric Defrost | 60 Hz

	Model	Capacity		Fan Data		
		10°F TD -20°F SST	6°C TD -29°C SST	No.	CFM	m³H
		BTUH	Watts			
6 Fins Per Inch	LCE635	**3,500**	1,030	1	**700**	1,189
	LCE643	**4,300**	1,260	1	**650**	1,104
	LCE665	**6,500**	1,900	2	**1,400**	2,379
	LCE676	**7,600**	2,230	2	**1,300**	2,209
	LCE694	**9,400**	2,750	2	**1,300**	2,209
	LCE6120	**12,000**	3,520	3	**2,100**	3,568
	LCE6140	**14,000**	4,100	3	**1,950**	3,313
	LCE6160	**16,000**	4,690	4	**2,600**	4,418
	LCE6180	**18,000**	5,270	4	**2,600**	4,418
	LCE6200	**20,000**	5,860	5	**3,250**	5,522
	LCE6240	**24,000**	7,030	6	**3,900**	6,627
	LCE6270	**27,000**	7,900	6	**3,900**	6,627
4 Fins Per Inch	LCE441	**4,100**	1,200	1	**690**	1,172
	LCE457	**5,700**	1,670	2	**1,440**	2,447
	LCE467	**6,700**	1,960	2	**1,380**	2,345
	LCE482	**8,200**	2,400	2	**1,380**	2,345
	LCE4105	**10,500**	3,080	3	**2,170**	3,687
	LCE4139	**13,900**	4,070	4	**2,760**	4,690
	LCE4174	**17,400**	5,100	5	**3,450**	5,862
	LCE4208	**20,800**	6,090	6	**4,140**	7,035
	LCE4235	**23,500**	6,880	6	**4,140**	7,035

Model LCE6/LCE4 Electric Defrost | 50 Hz †

	Model	Capacity		Fan Data		
		10°F TD -20°F SST	6°C TD -29°C SST	No.	CFM	m³H
		BTUH	Watts			
6 Fins Per Inch	LCE635	**3,325**	973	1	**630**	1,071
	LCE643	**4,085**	1,195	1	**586**	995
	LCE665	**6,175**	1,807	2	**1,261**	2,142
	LCE676	**7,220**	2,112	2	**1,171**	1,989
	LCE694	**8,930**	2,613	2	**1,171**	1,989
	LCE6120	**11,400**	3,335	3	**1,891**	3,213
	LCE6140	**13,300**	3,891	3	**1,756**	2,984
	LCE6160	**15,200**	4,447	4	**2,341**	3,978
	LCE6180	**17,100**	5,003	4	**2,341**	3,978
	LCE6200	**19,000**	5,559	5	**2,927**	4,973
	LCE6240	**22,800**	6,671	6	**3,512**	5,967
	LCE6270	**25,650**	7,504	6	**3,512**	5,967
4 Fins Per Inch	LCE441	**3,895**	1,140	1	**621**	1,056
	LCE457	**5,415**	1,584	2	**1,297**	2,203
	LCE467	**6,365**	1,862	2	**1,243**	2,111
	LCE482	**7,790**	2,279	2	**1,243**	2,111
	LCE4105	**9,975**	2,918	3	**1,954**	3,320
	LCE4139	**13,205**	3,863	4	**2,485**	4,223
	LCE4174	**16,530**	4,836	5	**3,107**	5,279
	LCE4208	**19,760**	5,781	6	**3,728**	6,334
	LCE4235	**22,325**	6,532	6	**3,728**	6,334

† *For EC motors, use 60 Hz capacity and airflow values (Units with EC motors operating at 50 Hz will not see a reduction in performance due to the electronic control of the motor)*

Capacity Correction Factors For Electric and Hot Gas Defrost Units

Saturated Suction Temperature °F	+20	-10	-20	-30
Saturated Suction Temperature °C	-7	-23	-29	-34
Multiply Capacity By	1.15	1.04	1.00	0.90

Specifications

Model LCE6/LCE4 Electric Defrost | 60 Hz

	Model	HP	Shaded Pole Motor		PSC, PSC-TE Motor				EC Motor		Defrost Heaters			
			208-230/1/60		208-230/1/60		460/1/60		208-230/1/60		Watts	230/1/60	230/3/60	460/1/60
			Amps	Watts	Amps	Watts	Amps	Watts	Amps	Watts		Total Amps		
6 Fins Per Inch	LCE635	1/15	**1.0**	122	**0.5**	91	**0.4**	117	**0.6**	59	900	3.9	2.3	2.0
	LCE643	1/15	**1.0**	122	**0.5**	91	**0.4**	117	**0.6**	59	900	3.9	2.3	2.0
	LCE665	1/15	**2.0**	244	**1.0**	182	**0.8**	234	**1.1**	118	1,800	7.8	4.5	3.9
	LCE676	1/15	**2.0**	244	**1.0**	182	**0.8**	234	**1.1**	118	1,800	7.8	4.5	3.9
	LCE694	1/15	**2.0**	244	**1.0**	182	**0.8**	234	**1.1**	118	1,800	7.8	4.5	3.9
	LCE6120	1/15	**3.0**	366	**1.5**	273	**1.2**	351	**1.6**	177	2,700	11.7	6.8	5.9
	LCE6140	1/15	**3.0**	366	**1.5**	273	**1.2**	351	**1.6**	177	2,700	11.7	6.8	5.9
	LCE6160	1/15	**4.0**	488	**2.0**	364	**1.6**	468	**2.1**	236	3,600	15.7	9.0	7.8
	LCE6180	1/15	**4.0**	488	**2.0**	364	**1.6**	468	**2.1**	236	3,600	15.7	9.0	7.8
	LCE6200	1/15	**5.0**	610	**2.5**	455	**2.0**	585	**2.6**	295	4,500	19.6	11.3	9.8
	LCE6240	1/15	**6.0**	732	**3.0**	546	**2.4**	702	**3.1**	354	5,400	23.5	13.6	11.7
	LCE6270	1/15	**6.0**	732	**3.0**	546	**2.4**	702	**3.1**	354	5,400	23.5	13.6	11.7
4 Fins Per Inch	LCE441	1/15	**1.0**	122	**0.5**	91	**0.4**	117	**0.6**	59	900	3.9	2.3	2.0
	LCE457	1/15	**2.0**	244	**1.0**	182	**0.8**	234	**1.1**	118	1,800	7.8	4.5	3.9
	LCE467	1/15	**2.0**	244	**1.0**	182	**0.8**	234	**1.1**	118	1,800	7.8	4.5	3.9
	LCE482	1/15	**2.0**	244	**1.0**	182	**0.8**	234	**1.1**	118	1,800	7.8	4.5	3.9
	LCE4105	1/15	**3.0**	366	**1.5**	273	**1.2**	351	**1.6**	177	2,700	11.7	6.8	5.9
	LCE4139	1/15	**4.0**	488	**2.0**	364	**1.6**	468	**2.1**	236	3,600	15.7	9.0	7.8
	LCE4174	1/15	**5.0**	610	**2.5**	455	**2.0**	585	**2.6**	295	4,500	19.6	11.3	9.8
	LCE4208	1/15	**6.0**	732	**3.0**	546	**2.4**	702	**3.1**	354	5,400	23.5	13.6	11.7
	LCE4235	1/15	**6.0**	732	**3.0**	546	**2.4**	702	**3.1**	354	5,400	23.5	13.6	11.7

Model LCE6/LCE4 Electric Defrost | 50 Hz

	Model	HP	PSC, PSC-TE Motor				EC Motor		Defrost Heaters			
			220/1/50		380/1/50		208-230/1/60		Watts	220/1/50	220/3/50	380/1/50
			Amps	Watts	Amps	Watts	Amps	Watts		Total Amps		
6 Fins Per Inch	LCE635	1/15	**0.5**	65	**0.4**	82	**0.6**	59	823	3.7	2.2	1.6
	LCE643	1/15	**0.5**	65	**0.4**	82	**0.6**	59	823	3.7	2.2	1.6
	LCE665	1/15	**1.0**	130	**0.8**	164	**1.1**	118	1,647	7.5	4.3	3.2
	LCE676	1/15	**1.0**	130	**0.8**	164	**1.1**	118	1,647	7.5	4.3	3.2
	LCE694	1/15	**1.0**	130	**0.8**	164	**1.1**	118	1,647	7.5	4.3	3.2
	LCE6120	1/15	**1.5**	195	**1.2**	246	**1.6**	177	2,470	11.2	6.5	4.9
	LCE6140	1/15	**1.5**	195	**1.2**	246	**1.6**	177	2,470	11.2	6.5	4.9
	LCE6160	1/15	**2.0**	260	**1.6**	328	**2.1**	236	3,294	15.0	8.6	6.5
	LCE6180	1/15	**2.0**	260	**1.6**	328	**2.1**	236	3,294	15.0	8.6	6.5
	LCE6200	1/15	**2.5**	325	**2.0**	410	**2.6**	295	4,117	18.7	10.8	8.1
	LCE6240	1/15	**3.0**	390	**2.4**	492	**3.1**	354	4,941	22.5	13.0	9.7
	LCE6270	1/15	**3.0**	390	**2.4**	492	**3.1**	354	4,941	22.5	13.0	9.7
4 Fins Per Inch	LCE441	1/15	**0.5**	65	**0.4**	82	**0.6**	59	823	3.7	2.2	1.6
	LCE457	1/15	**1.0**	130	**0.8**	164	**1.1**	118	1,647	7.5	4.3	3.2
	LCE467	1/15	**1.0**	130	**0.8**	164	**1.1**	118	1,647	7.5	4.3	3.2
	LCE482	1/15	**1.0**	130	**0.8**	164	**1.1**	118	1,647	7.5	4.3	3.2
	LCE4105	1/15	**1.5**	195	**1.2**	246	**1.6**	177	2,470	11.2	6.5	4.9
	LCE4139	1/15	**2.0**	260	**1.6**	328	**2.1**	236	3,294	15.0	8.6	6.5
	LCE4174	1/15	**2.5**	325	**2.0**	410	**2.6**	295	4,117	18.7	10.8	8.1
	LCE4208	1/15	**3.0**	390	**2.4**	492	**3.1**	354	4,941	22.5	13.0	9.7
	LCE4235	1/15	**3.0**	390	**2.4**	492	**3.1**	354	4,941	22.5	13.0	9.7

Performance Data

Model LCH6/LCH4 Hot Gas Defrost | 60 Hz

	Model	Capacity		Fan Data		
		10°F TD -20°F SST	6°C TD -29°C SST	No.	CFM	m³H
		BTUH	Watts			
6 Fins Per Inch	LCH635	**3,500**	1,030	1	**700**	1,189
	LCH643	**4,300**	1,260	1	**650**	1,104
	LCH665	**6,500**	1,900	2	**1,400**	2,379
	LCH676	**7,600**	2,230	2	**1,300**	2,209
	LCH694	**9,400**	2,750	2	**1,300**	2,209
	LCH6120	**12,000**	3,520	3	**2,100**	3,568
	LCH6140	**14,000**	4,100	3	**1,950**	3,313
	LCH6160	**16,000**	4,690	4	**2,600**	4,418
	LCH6180	**18,000**	5,270	4	**2,600**	4,418
	LCH6200	**20,000**	5,860	5	**3,250**	5,522
	LCH6240	**24,000**	7,030	6	**3,900**	6,627
	LCH6270	**27,000**	7,900	6	**3,900**	6,627
4 Fins Per Inch	LCH441	**4,100**	1,200	1	**690**	1,172
	LCH457	**5,700**	1,670	2	**1,440**	2,447
	LCH467	**6,700**	1,960	2	**1,380**	2,345
	LCH482	**8,200**	2,400	2	**1,380**	2,345
	LCH4105	**10,500**	3,080	3	**2,170**	3,687
	LCH4139	**13,900**	4,070	4	**2,760**	4,690
	LCH4174	**17,400**	5,100	5	**3,450**	5,862
	LCH4208	**20,800**	6,090	6	**4,140**	7,035
	LCH4235	**23,500**	6,880	6	**4,140**	7,035

Capacity Correction Factors For Electric and Hot Gas Defrost Units

Saturated Suction Temperature °F	+20	-10	-20	-30
Saturated Suction Temperature °C	-7	-23	-29	-34
Multiply Capacity By	1.15	1.04	1.00	0.90

Model LCH6/LCH4 Hot Gas Defrost | 50 Hz †

	Model	Capacity		Fan Data		
		10°F TD -20°F SST	6°C TD -29°C SST	No.	CFM	m³H
		BTUH	Watts			
6 Fins Per Inch	LCH635	**3,325**	973	1	**630**	1,070
	LCH643	**4,085**	1,195	1	**586**	995
	LCH665	**6,175**	1,802	2	**1,261**	2,142
	LCH676	**7,220**	2,112	2	**1,171**	1,989
	LCH694	**8,930**	2,613	2	**1,171**	1,989
	LCH6120	**11,400**	3,335	3	**1,891**	3,213
	LCH6140	**13,300**	3,891	3	**1,756**	2,984
	LCH6160	**15,200**	4,447	4	**2,341**	3,978
	LCH6180	**17,100**	5,003	4	**2,341**	3,978
	LCH6200	**19,000**	5,559	5	**2,927**	4,973
	LCH6240	**22,800**	6,671	6	**3,512**	5,967
	LCH6270	**25,650**	7,504	6	**3,512**	5,967
4 Fins Per Inch	LCH441	**3,895**	1,140	1	**621**	1,056
	LCH457	**5,415**	1,584	2	**1,297**	2,203
	LCH467	**6,365**	1,862	2	**1,243**	2,111
	LCH482	**7,790**	2,279	2	**1,243**	2,111
	LCH4105	**9,975**	2,918	3	**1,954**	3,320
	LCH4139	**13,205**	3,863	4	**2,485**	4,223
	LCH4174	**16,530**	4,836	5	**3,107**	5,279
	LCH4208	**19,760**	5,781	6	**3,728**	6,334
	LCH4235	**22,325**	6,532	6	**3,728**	6,334

† *For EC motors, use 60 Hz capacity and airflow values (Units with EC motors operating at 50 Hz will not see a reduction in performance due to the electronic control of the motor)*

Specifications

Model LCH6/LCH4 Hot Gas Defrost | 60 Hz

	Model	HP	Shaded Pole Motor				PSC, PSC-TE Motor						EC Motor				Drain Pan Heaters*			
			115/1/60		208-230/1/60		115/1/60		208-230/1/60		460/1/60		115/1/60		208-230/1/60		Watts	115/1/60	230/1/60	460/1/60
			Amps	Watts	Amps	Watts	Amps	Watts	Amps	Watts	Amps	Watts	Amps	Watts	Amps	Watts		Total Amps		
6 Fins Per Inch	LCH635	1/15	**1.8**	116	**1.0**	122	**1.0**	82	**0.5**	91	**0.4**	117	**1.1**	57	**0.6**	59	300	2.6	1.3	0.7
	LCH643	1/15	**1.8**	116	**1.0**	122	**1.0**	82	**0.5**	91	**0.4**	117	**1.1**	57	**0.6**	59	300	2.6	1.3	0.7
	LCH665	1/15	**3.6**	232	**2.0**	244	**2.0**	164	**1.0**	182	**0.8**	234	**2.0**	114	**1.1**	118	600	5.2	2.6	1.3
	LCH676	1/15	**3.6**	232	**2.0**	244	**2.0**	164	**1.0**	182	**0.8**	234	**2.0**	114	**1.1**	118	600	5.2	2.6	1.3
	LCH694	1/15	**3.6**	232	**2.0**	244	**2.0**	164	**1.0**	182	**0.8**	234	**2.0**	114	**1.1**	118	600	5.2	2.6	1.3
	LCH6120	1/15	**5.4**	348	**3.0**	366	**3.0**	246	**1.5**	273	**1.2**	351	**2.9**	171	**1.6**	177	900	7.8	3.9	2.0
	LCH6140	1/15	**5.4**	348	**3.0**	366	**3.0**	246	**1.5**	273	**1.2**	351	**2.9**	171	**1.6**	177	900	7.8	3.9	2.0
	LCH6160	1/15	**7.2**	464	**4.0**	488	**4.0**	328	**2.0**	364	**1.6**	468	**3.8**	228	**2.1**	236	1,200	10.4	5.2	2.6
	LCH6180	1/15	**7.2**	464	**4.0**	488	**4.0**	328	**2.0**	364	**1.6**	468	**3.8**	228	**2.1**	236	1,200	10.4	5.2	2.6
	LCH6200	1/15	**9.0**	580	**5.0**	610	**5.0**	410	**2.5**	455	**2.0**	585	**4.7**	285	**2.6**	295	1,500	13.0	6.5	3.3
	LCH6240	1/15	**10.8**	696	**6.0**	732	**6.0**	492	**3.0**	546	**2.4**	702	**5.6**	342	**3.1**	354	1,800	15.7	7.8	3.9
	LCH6270	1/15	**10.8**	696	**6.0**	732	**6.0**	492	**3.0**	546	**2.4**	702	**5.6**	342	**3.1**	354	1,800	15.7	7.8	3.9
4 Fins Per Inch	LCH441	1/15	**1.8**	116	**1.0**	122	**1.0**	82	**0.5**	91	**0.4**	117	**1.1**	57	**0.6**	59	300	2.6	1.3	0.7
	LCH457	1/15	**3.6**	232	**2.0**	244	**2.0**	164	**1.0**	182	**0.8**	234	**2.0**	114	**1.1**	118	600	5.2	2.6	1.3
	LCH467	1/15	**3.6**	232	**2.0**	244	**2.0**	164	**1.0**	182	**0.8**	234	**2.0**	114	**1.1**	118	600	5.2	2.6	1.3
	LCH482	1/15	**3.6**	232	**2.0**	244	**2.0**	164	**1.0**	182	**0.8**	234	**2.0**	114	**1.1**	118	600	5.2	2.6	1.3
	LCH4105	1/15	**5.4**	348	**3.0**	366	**3.0**	246	**1.5**	273	**1.2**	351	**2.9**	171	**1.6**	177	900	7.8	3.9	2.0
	LCH4139	1/15	**7.2**	464	**4.0**	488	**4.0**	328	**2.0**	364	**1.6**	468	**3.8**	228	**2.1**	236	1,200	10.4	5.2	2.6
	LCH4174	1/15	**9.0**	580	**5.0**	610	**5.0**	410	**2.5**	455	**2.0**	585	**4.7**	285	**2.6**	295	1,500	13.0	6.5	3.3
	LCH4208	1/15	**10.8**	696	**6.0**	732	**6.0**	492	**3.0**	546	**2.4**	702	**5.6**	342	**3.1**	354	1,800	15.7	7.8	3.9
	LCH4235	1/15	**10.8**	696	**6.0**	732	**6.0**	492	**3.0**	546	**2.4**	702	**5.6**	342	**3.1**	354	1,800	15.7	7.8	3.9

** Optional with electric drain pan*

Model LCH6/LCH4 Hot Gas Defrost | 50 Hz

	Model	HP	PSC, PSC-TE Motor						EC Motor				Drain Pan Heaters*			
			110/1/50		220/1/50		460/1/50		110/1/50		220/1/50		Watts	110/1/50	220/1/50	380/1/50
			Amps	Watts	Amps	Watts	Amps	Watts	Amps	Watts	Amps	Watts		Total Amps		
6 Fins Per Inch	LCH635	1/15	**1.0**	68	**0.5**	65	**0.4**	82	**1.1**	57	**0.6**	59	275	2.5	1.3	0.6
	LCH643	1/15	**1.0**	68	**0.5**	65	**0.4**	82	**1.1**	57	**0.6**	59	275	2.5	1.3	0.6
	LCH665	1/15	**2.0**	136	**1.0**	130	**0.8**	164	**2.0**	114	**1.1**	118	549	5.0	2.5	1.1
	LCH676	1/15	**2.0**	136	**1.0**	130	**0.8**	164	**2.0**	114	**1.1**	118	549	5.0	2.5	1.1
	LCH694	1/15	**2.0**	136	**1.0**	130	**0.8**	164	**2.0**	114	**1.1**	118	549	5.0	2.5	1.1
	LCH6120	1/15	**3.0**	204	**1.5**	195	**1.2**	246	**2.9**	171	**1.6**	177	823	7.5	3.7	1.6
	LCH6140	1/15	**3.0**	204	**1.5**	195	**1.2**	246	**2.9**	171	**1.6**	177	823	7.5	3.7	1.6
	LCH6160	1/15	**4.0**	272	**2.0**	260	**1.6**	328	**3.8**	228	**2.1**	236	1,098	10.0	5.0	2.2
	LCH6180	1/15	**4.0**	272	**2.0**	260	**1.6**	328	**3.8**	228	**2.1**	236	1,098	10.0	5.0	2.2
	LCH6200	1/15	**5.0**	340	**2.5**	325	**2.0**	410	**4.7**	285	**2.6**	295	1,372	12.5	6.2	2.7
	LCH6240	1/15	**6.0**	408	**3.0**	390	**2.4**	492	**5.6**	342	**3.1**	354	1,649	15.0	7.5	3.2
	LCH6270	1/15	**6.0**	408	**3.0**	390	**2.4**	492	**5.6**	342	**3.1**	354	1,649	15.0	7.5	3.2
4 Fins Per Inch	LCH441	1/15	**1.0**	68	**0.5**	65	**0.4**	82	**1.1**	57	**0.6**	59	275	2.5	1.3	0.6
	LCH457	1/15	**2.0**	136	**1.0**	130	**0.8**	164	**2.0**	114	**1.1**	118	549	5.0	2.5	1.1
	LCH467	1/15	**2.0**	136	**1.0**	130	**0.8**	164	**2.0**	114	**1.1**	118	549	5.0	2.5	1.1
	LCH482	1/15	**2.0**	136	**1.0**	130	**0.8**	164	**2.0**	114	**1.1**	118	549	5.0	2.5	1.1
	LCH4105	1/15	**3.0**	204	**1.5**	195	**1.2**	246	**2.9**	171	**1.6**	177	823	7.5	3.7	1.6
	LCH4139	1/15	**4.0**	272	**2.0**	260	**1.6**	328	**3.8**	228	**2.1**	236	1,098	10.0	5.0	2.2
	LCH4174	1/15	**5.0**	340	**2.5**	325	**2.0**	410	**4.7**	285	**2.6**	295	1,372	12.5	6.2	2.7
	LCH4208	1/15	**6.0**	408	**3.0**	390	**2.4**	492	**5.6**	342	**3.1**	354	1,649	15.0	7.5	3.2
	LCH4235	1/15	**6.0**	408	**3.0**	390	**2.4**	492	**5.6**	342	**3.1**	354	1,649	15.0	7.5	3.2

** Optional with electric drain pan*

Physical Data

Model LCA6 Air Defrost

Model	No. of Fans	Connections (in.)				Approx. Net Wt.	
		Coil Inlet OD	Suction ID	External Equalizer OD	Drain MPT	lbs.	kg
LCA640	1	1/2	5/8	1/4	3/4	**28**	13
LCA651	1	1/2	5/8	1/4	3/4	**31**	15
LCA662	1	1/2	7/8	1/4	3/4	**34**	16
LCA672	2	1/2	7/8	1/4	3/4	**45**	21
LCA690	2	1/2	7/8	1/4	3/4	**49**	23
LCA6110	2	1/2	7/8	1/4	3/4	**51**	24
LCA6135	3	1/2	7/8	1/4	3/4	**67**	31
LCA6160	3	1/2	7/8	1/4	3/4	**69**	32
LCA6185	4	1/2	1-1/8	1/4	3/4	**82**	38
LCA6215	4	1/2	1-1/8	1/4	3/4	**84**	39
LCA6260	5	1/2	1-1/8	1/4	3/4	**103**	47
LCA6310	6	1/2	1-1/8	1/4	3/4	**124**	57
LCA6350	6	1/2	1-3/8	1/4	3/4	**127**	58

Model LCE6/LCE4 Electric Defrost

	Model	No. of Fans	Connections (in.)				Approx. Net Wt.	
			Coil Inlet OD	Suction ID	External Equalizer OD	Drain MPT	lbs.	kg
6 Fins Per Inch	LCE635	1	1/2	5/8	1/4	3/4	**24**	11
	LCE643	1	1/2	5/8	1/4	3/4	**29**	14
	LCE665	2	1/2	5/8	1/4	3/4	**43**	20
	LCE676	2	1/2	7/8	1/4	3/4	**45**	21
	LCE694	2	1/2	7/8	1/4	3/4	**48**	22
	LCE6120	3	1/2	7/8	1/4	3/4	**60**	28
	LCE6140	3	1/2	7/8	1/4	3/4	**62**	29
	LCE6160	4	1/2	1-1/8	1/4	3/4	**81**	37
	LCE6180	4	1/2	1-1/8	1/4	3/4	**84**	39
	LCE6200	5	1/2	1-1/8	1/4	3/4	**101**	46
	LCE6240	6	1/2	1-1/8	1/4	3/4	**121**	55
	LCE6270	6	1/2	1-1/8	1/4	3/4	**124**	57
4 Fins Per Inch	LCE441	1	1/2	5/8	1/4	3/4	**28**	13
	LCE457	2	1/2	7/8	1/4	3/4	**42**	19
	LCE467	2	1/2	7/8	1/4	3/4	**44**	20
	LCE482	2	1/2	7/8	1/4	3/4	**47**	22
	LCE4105	3	1/2	7/8	1/4	3/4	**59**	27
	LCE4139	4	1/2	1-1/8	1/4	3/4	**80**	37
	LCE4174	5	1/2	1-1/8	1/4	3/4	**100**	46
	LCE4208	6	1/2	1-1/8	1/4	3/4	**120**	55
	LCE4235	6	1/2	1-1/8	1/4	3/4	**123**	56

Physical Data

Model LCH6/LCH4 Hot Gas Defrost

	Model	No. of Fans	Connections (in.)					Approx. Net Wt.	
			Coil Inlet ODF	Suction ID	External Equalizer OD	Side Port OD	Hot Gas Pan Conns. OD/ID*	lbs.	kg
4 Fins Per Inch	LCH635	1	5/8	5/8	1/4	3/8	5/8	**26**	12
	LCH643	1	5/8	5/8	1/4	3/8	5/8	**31**	15
	LCH665	2	5/8	5/8	1/4	3/8	5/8	**45**	21
	LCH676	2	5/8	7/8	1/4	3/8	5/8	**47**	22
	LCH694	2	7/8	7/8	1/4	3/8	5/8	**50**	23
	LCH6120	3	7/8	7/8	1/4	3/8	5/8	**62**	29
	LCH6140	3	7/8	7/8	1/4	3/8	5/8	**64**	30
	LCH6160	4	7/8	1-1/8	1/4	3/8	5/8	**83**	38
	LCH6180	4	1-1/8	1-1/8	1/4	3/8	5/8	**86**	40
	LCH6200	5	1-1/8	1-1/8	1/4	3/8	5/8	**103**	47
	LCH6240	6	1-1/8	1-1/8	1/4	3/8	5/8	**123**	56
	LCH6270	6	1-1/8	1-1/8	1/4	3/8	5/8	**126**	57
4 Fins Per Inch	LCH441	1	5/8	5/8	1/4	3/8	5/8	**30**	14
	LCH457	2	5/8	7/8	1/4	3/8	5/8	**44**	20
	LCH467	2	5/8	7/8	1/4	3/8	5/8	**46**	21
	LCH482	2	5/8	7/8	1/4	3/8	5/8	**49**	23
	LCH4105	3	7/8	7/8	1/4	3/8	5/8	**61**	28
	LCH4139	4	7/8	1-1/8	1/4	3/8	5/8	**82**	38
	LCH4174	5	7/8	1-1/8	1/4	3/8	5/8	**102**	47
	LCH4208	6	7/8	1-1/8	1/4	3/8	5/8	**122**	56
	LCH4235	6	1-1/8	1-1/8	1/4	3/8	5/8	**125**	57

The standard design for the Larkin low profile evaporators incorporates an efficient hot gas loop in the drain pan. Utilizing a hot gas loop is ideal for hot gas defrost applications where high temperature gas can be maintained to defrost both the evaporator drain pan and coil. For these models, an insulated drain pan is standard.

For applications where cooler (lower) temperature hot gas is used for defrosting, Larkin offers optional electric heater elements in the drain pan to ensure quick and efficient defrost of the drain pan allowing condensate to drain quickly, saving the hot gas for efficient evaporator coil defrost.

If the optional electric heating element drain pan is preferred, please specify when ordering, there is no additional charge.

* Hot Gas Loop Piping Connections

- For reverse cycle defrost piping:
  - 5/8 ID Inlet
  - 5/8 OD Outlet
- For 3-pipe defrost piping:
  - 5/8 OD Inlet
  - 5/8 ID Outlet

Dimensional Data

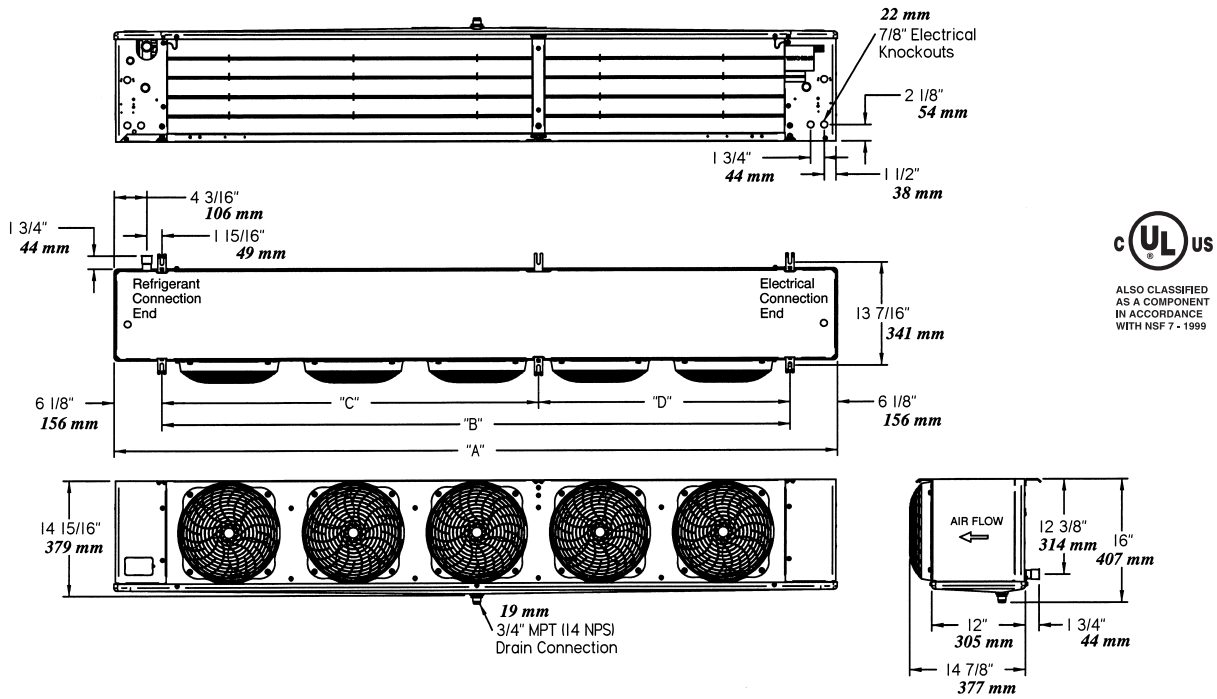

Dimensional Data For All Models

Air Defrost Model	Electric and Hot Gas Defrost Model		No. of Fans	Dimensions							
				A		B		C		D	
6 FPI	6 FPI	4 FPI		in.	mm	in.	mm	in.	mm	in.	mm
640	-	-	1	**29.50**	749.3	**17.25**	438.1	-	-	-	-
651	635	-	1	**29.50**	749.3	**17.25**	438.1	-	-	-	-
662	643	441	1	**29.50**	749.3	**17.25**	438.1	-	-	-	-
672	-	-	2	**45.50**	1,155.7	**33.25**	845	-	-	-	-
-	665	457	2	**45.50**	1,155.7	**33.25**	845	-	-	-	-
690	-	-	2	**45.50**	1,155.7	**33.25**	845	-	-	-	-
6110	676	467	2	**45.50**	1,155.7	**33.25**	845	-	-	-	-
-	694	482	2	**45.50**	1,155.7	**33.25**	845	-	-	-	-
-	6120	4105	3	**61.50**	1,562.1	**49.25**	1,251	-	-	-	-
6135	-	-	3	**61.50**	1,562.1	**49.25**	1,251	-	-	-	-
6160	6140	-	3	**61.50**	1,562.1	**49.25**	1,251	-	-	-	-
6185	6160	-	4	**77.50**	1,968.5	**65.25**	1,657	-	-	-	-
6215	6180	4139	4	**77.50**	1,968.5	**65.25**	1,657	-	-	-	-
6260	6200	4174	5	**93.50**	2,374.9	**81.25**	2,064	**48.63**	1,235.1	**32.63**	828.7
6310	6240	4208	6	**109.50**	2,781.3	**97.25**	2,470	**48.63**	1,235.1	**48.63**	1,235.1
6350	6270	4235	6	**109.50**	2,781.3	**97.25**	2,470	**48.63**	1,235.1	**48.63**	1,235.1

NOTES: Hanger brackets will accept 3/8" / 9.5 mm hanger rods

Hot Gas Reverse Cycle Kits

	Ship Loose			Factory Installed		
	TXV Bypass Assembly Kits			TXV Bypass Assembly Kits		
LCH 6 FPI	**SQE/SBF**	**EG**	**HFESC**	**SQE/SBF**	**EG**	**HFESC**
635-676 694-6160 6180-6270	50169210 50169211 50169212	50169213 50169214 50169215	50169216 50169217 50169218	52733701 52733702 52733703	52733704 52733705 52733706	52733707 52733708 52733709
LCH 4 FPI						
441-482 4105-4208 4235	50169210 50169211 50169212	50169213 50169214 50169215	50169216 50169217 50169218	52733701 52733702 52733703	52733704 52733705 52733706	52733707 52733708 52733709

	Ship Loose		Factory Installed	
	Drain Pan Loop Check Valve Kit	Suction Line Check Valve Kit	Drain Pan Loop Check Valve Kit	Suction Line Check Valve Kit
LCH 6 FPI				
635-665 676-6140 6160-6270	50169304 50169305 50169306	50169604 50169605 50169606	52733601 52733602 52733603	52733801 52733802 52733803
LCH 4 FPI				
441 457-4105 4139-4235	50169304 50169305 50169306	50169604 50169605 50169606	52733601 52733602 52733603	52733801 52733802 52733803

Recommendation *is that both check valve kits are ordered: (For hot gas models with the hot gas loop drain pan ONLY)*

NOTE: *The drain pan check valve kit can be ordered as an independent item. But the suction line check valve kit must be ordered with the drain pan check valve kit in order to complete the piping*

NOTE: *When using the hot gas units with a hot gas loop drain pan on 0°F applications and below, an insulated drain pan is required (comes standard when ordering)*

The hot gas unit coolers can be used in reverse cycle hot gas defrost systems using multiple evaporators connected to one condensing unit. Generally, not more than one-third of the system defrosts at one time.

During the reverse cycle defrost, the reversing valve, located in the compressor discharge line, diverts hot gas through the suction line to the evaporator. See piping view in Figure 1. The suction line check valve directs the hot gas through the drain pan loop which prevents condensate in the pan from freezing. The hot gas exits the loop at the pan loop outlet header and enters the evaporator through the check valve assembly. As the hot gas defrosts the coil, heat is removed from the hot gas and eventually it condenses into a liquid and exits the coil at the distributor sideport. The liquid then flows through the check valve of the thermostatic expansion valve bypass assembly, around the thermostatic expansion valve, and into the system liquid line. The liquid refrigerant then feeds other evaporators on the cooling cycle, evaporates, and returns to the compressor through their suction lines.

Figure 1. Reverse Cycle Piping

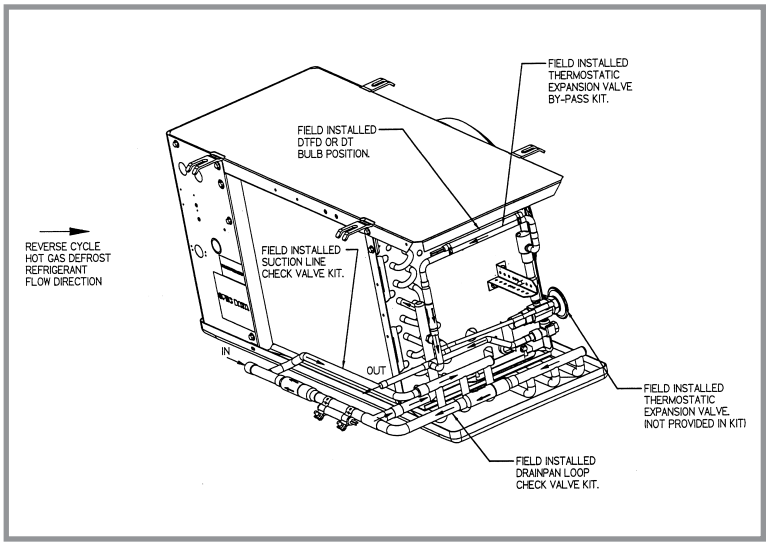

Hot Gas Reverse Cycle Kits (cont.)

In the refrigeration cycle, the thermostatic expansion valve bypass assembly check valve only allows refrigerant flow through the thermostatic expansion valve and into the evaporator coil. As the refrigerant vapor exits the coil at the suction line, the check valve of the drain pan loop check valve assembly prevents the refrigerant vapor flow through the drain pan loop.

Factory engineered assemblies (kits) are available for both ship loose and factory installed at an additional cost to complete the reverse cycle piping and components. The suction line check valve assembly includes the suction line check valve and the piping for both the suction line and the connection to the drain pan loop inlet header. In order for the suction line check valve assembly to be mounted, the drain pan loop check valve assembly must be used. The drain pan loop check valve assembly includes the check valve, suction line tee and a bent pipe. The thermostatic expansion valve bypass assembly option includes the check valve, tee and necessary piping. In order for the thermostatic expansion valve bypass assembly option to be complete, a thermostatic expansion valve must be selected by the sales engineer. The thermostatic expansion valve bypass assembly option is dependent on the body style of the thermostatic expansion valves which includes the Sporlan SQE, SBF, EG and the Alco HFESC body styles. The factory installed thermostatic expansion valve bypass assembly option must have the thermostatic expansion valve selection included on the order for the hot gas unit cooler.

Figure 2. Typical Liquid Line Bypass Kit
(Shown assembled and modified for heat exchanger)

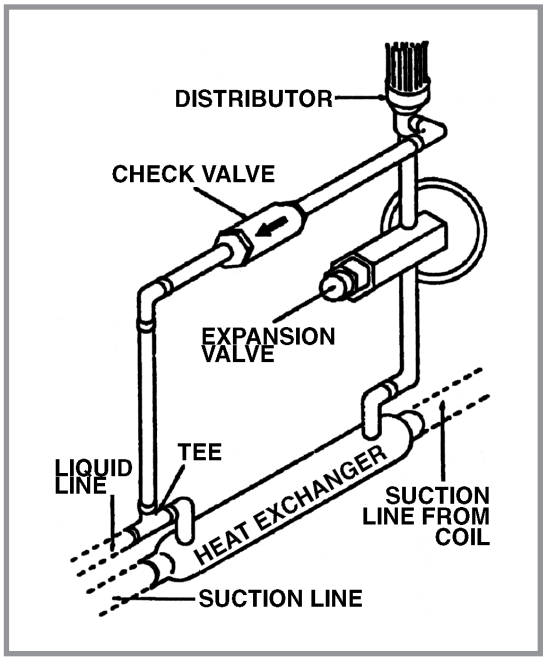

To increase the efficiency, higher performance and greater system protection, a heat exchanger may be beneficial to the system. In order to use a heat exchanger, the thermostatic expansion valve bypass assembly option must be modified. See the piping view in Figure 2. The modification includes rerouting the pipe from the thermostatic expansion valve bypass check valve to the inlet connection of the liquid line to the heat exchanger. A pipe needs to be routed from the liquid line outlet connection of the heat exchanger to the inlet connection of the thermostatic expansion valve.

The electrical control option includes an adjustable defrost termination and fan delay control (DTFD) which is standard. For an additional cost, an optional (2) control electrical system is available with one adjustable control for defrost termination (DT) and one fixed control for the fan delay (FD). For both the DTFD and DT adjustable controls, the remote bulb position is with the bulb strapped to the piping of the thermostatic expansion valve bypass assembly option between the distributor sideport and the check valve. When the thermostatic expansion valve bypass assembly is ship loose, the installer will need to position the remote bulb. When the thermostatic expansion valve bypass assembly is factory installed, the remote bulb should already be properly installed.

3-Pipe Hot Gas Defrost

The hot gas defrost unit coolers conforms to the standard 3-pipe hot gas system using a check valve assembly, an electrical control to terminate the defrost, and a hot gas solenoid valve. The check valve assembly transports the hot gas between the drain pan loop and the sideport distributor of the coil. The check valve assembly kit is available for ship loose or factory installed for an additional cost.

The electrical control option includes an adjustable defrost termination and fan delay control (DTFD) which is standard. An optional (2) control electrical system is available with one adjustable control for defrost termination (DT) and one fixed control for the fan delay (FD) for an additional cost. For both the DTFD and DT adjustable controls, the remote bulb position is with the bulb strapped to the suction line to insure a complete defrost. The remote bulb is positioned by the installer. The hot gas solenoid valve must be ordered separately and will be ship loose. The thermostatic expansion valve could be ordered separately and ship loose or the thermostatic expansion valve could be factory installed with a liquid line for an additional cost.

Figure 3. 3-Pipe

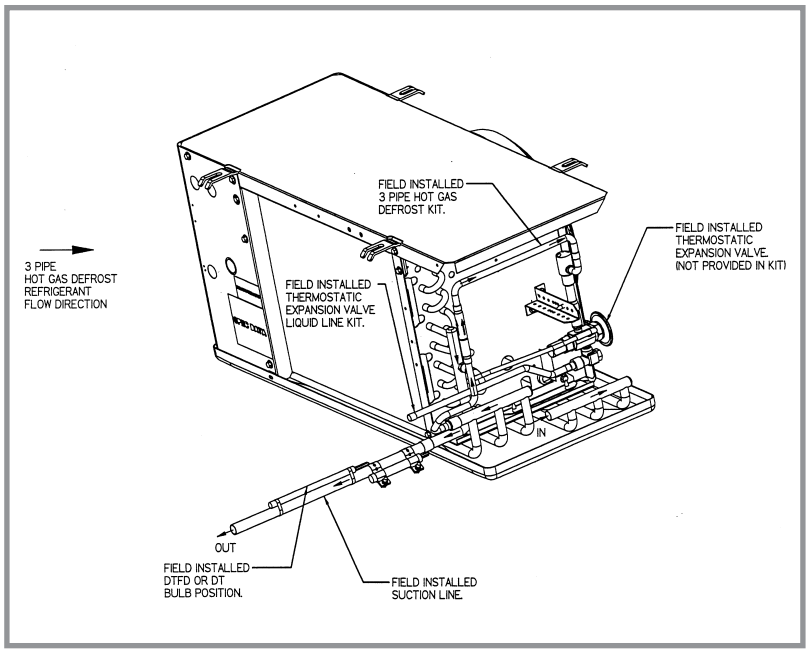

The liquid line is designed for the body styles of the Sporlan SQE, SBF, EG and the Alco HFESC thermostatic expansion valves. The thermostatic expansion valve needs to be selected by the sales engineer. In a typical 3-pipe hot gas defrost multiple evaporator system, the compressor discharge defrosts the evaporator. The liquid/vapor mixture of refrigerant after defrost, however, returns to the common suction line of the system. In order to provide sufficient re-evaporation of the liquid vapor mixture and sufficient heat for defrost, no more than one-third of the system should be defrosted at one time. Some means of control in the 3-pipe hot gas system should be supplied to regulate the large amount of liquid returning to the compressor, refrigerant slugging can otherwise damage the compressor.

	Ship Loose			Factory Installed		
	TXV Liquid Line			TXV Liquid Line		
LCH 6 FPI	**SQE/SBF**	**EG**	**HFESC**	**SQE/SBF**	**EG**	**HFESC**
635-676	50169410	50169413	50169416	52733901	52733904	52733907
694-6160	50169411	50169414	50169417	52733902	52733905	52733908
6180-6270	50169412	50169415	50169418	52733903	52733906	52733909
LCH 4 FPI						
441-482	50169410	50169413	50169416	52733901	52733904	52733907
4105-4208	50169411	50169414	50169417	52733902	52733905	52733908
4235	50169412	50169415	50169418	52733903	52733906	52733909

For hot gas models with the hot gas loop drain pan only

When using the hot gas units with a hot gas loop drain pan on 0°F applications and below, an insulated drain pan is required (comes standard on those units)

	Ship Loose	Factory Installed
	Drain Pan Loop Check Valve Kit	Drain Pan Loop Check Valve Kit
LCH 6 FPI		
635-676	50169504	52739601
694-6160	50169505	52739602
6180-6270	50169506	52739603
LCH 4 FPI		
441-482	50169504	52739601
4105-4208	50169505	52739602
4235	50169506	52739603

InterLINK
Commercial Refrigeration Parts

Right source. Right parts. Right now.

InterLink™ is your link to a complete line of dependable and certified commercial refrigeration parts, accessories and innovative electronic controls for all Larkin equipment. At InterLink, we provide our wholesalers with a comprehensive selection of product solutions and innovative technologies for the installed customer base. And every product is built to ensure the same high performance standards with which all Heatcraft Refrigeration Products (HRP) brands are built — backed by a dedicated team to serve every customer need, delivering at the best lead times in the industry.

Dependable. Versatile. Courteous.

Finally, one simple source for all your replacement needs from a name you can trust.

For parts, please contact (800) 686-7278 or visit www.interlinkparts.com.

No. Fans	Air Defrost	Electric & Hot Gas Defrost	
	6 FPI	6 FPI	4 FPI
1	640-662	635-643	441
2	672-6110	665-694	457-482
3	6135-6160	6120-6140	4105
4	6185-62215	6160-6180	4139
5	6260	6200	4174
6	6310-6350	6240-6270	4208-4235

Electric Defrost

Part No.	Description	Voltage	No. Fans
Coil Heater			
24752001	300 W	208-230/1/60	1
24752002	600 W	208-230/1/60	2
24752003	900 W	208-230/1/60	3
24752004	1200 W	208-230/1/60	4
24752005	1500 W	208-230/1/60	5
24752006	1800 W	208-230/1/60	6
Bottom Coil Heater			
24752401	150W	208-230/1/60	1
24752402	300W	208-230/1/60	2
24752403	450W	208-230/1/60	3
24752404	600W	208-230/1/60	4
24752405	750W	208-230/1/60	5
24752406	900W	208-230/1/60	6
Drain Pan Heater			
24752501	150W	208-230/1/60	1
24752502	300W	208-230/1/60	2
24752503	450W	208-230/1/60	3
24752504	600W	208-230/1/60	4
24750205	750W	208-230/1/60	5
24750206	900W	208-230/1/60	6

Electrical Components

Part No.	Description	No. Fans
22512601	Terminal Strip	1 - 6
5709L	Defrost Termination/Fan Delay - Klixon type	1 - 6
4267-W	Defrost Termination/Fan Delay - Adjustable type	1 - 6
2891040	Room Thermostat	1 - 6
5708L	Heater Safety - Klixon type	1 - 6

Hot Gas Defrost – Electric Drain Pan Option Drain Pan Heater (1 per unit)

Part No.	Description	Voltage	No. Fans
24752101	300 W	115/1/60	1
24752102	600 W	115/1/60	2
24752103	900 W	115/1/60	3
24752104	1200 W	115/1/60	4
24752105	1500 W	115/1/60	5
24752106	1800 W	115/1/60	6
24752201	300 W	208-230/1/60	1
24752202	600 W	208-230/1/60	2
24752203	900 W	208-230/1/60	3
24752204	1200 W	208-230/1/60	4
24752205	1500 W	208-230/1/60	5
24752206	1800 W	208-230/1/60	6
24752301	300 W	460/1/60	1
24752302	600 W	460/1/60	2
24752303	900 W	460/1/60	3
24752304	1200 W	460/1/60	4
24752305	1500 W	460/1/60	5
24752306	1800 W	460/1/60	6

Motor/Fan Blade/Fan Guards

Part No.	Description	No. Fans
25300101	Motor 115/1/60 Shaded Pole	1 - 6
25300201	Motor 208-230/1/60 Shaded Pole	1 - 6
25309501	Motor 115(110)/1/60(50) Totally Enclosed PSC	1 - 6
25309601	Motor 208-230/1/60/50 Totally Enclosed PSC	1 - 6
25309701	Motor 460/1/60/50 Totally Enclosed PSC	1 - 6
25309801	Motor 208-230(220)/1/60(50) PSC	1 - 6
25308701	Motor 460(380)/1/60(50) PSC	1 - 6
5140C	Fan Blade	1 - 6
37000701	Fan Guard - Molded	1 - 6
37000601	Fan Guard - Wire	1 - 6
23104901	Motor Mount used with 115 & 208-230V motors	1 - 6
23103301	Motor Mount used with 460V motors	1 - 6
25317701	Motor 208-230/1/60 EC	1 - 6
25317801	Motor 115/1/60 EC	1 - 6

Cabinet Components

Part No.	Description	No. Fans
40480*02	Painted Drain Pan Air Defrost	–
40481*03	Outer Painted Drain Pan HG	–
40480*01	Inner Drain Pan HG	–
40880802	Access Panel - Elect.	1 - 6
40880702	Access Panel - Refrig.	1 - 6
40880902	Back Panel - Refrig.	1 - 6
40881002	Back Panel - Elect.	1 - 6
40881202	End Panel - Hot Gas Refrig.	1 - 6
40480*04	Painted Drain Pan - Electric Defrost	–

* 1 for (1) fan, 2 for (2) fans, 3 for (3) fans, 4 for (4) fans, 5 for (5) fans

Drain Fittings

Part No.	Description	No. Fans
26914901	Drain Fitting Kit	1 - 6
50148802	Drain Fitting Elbow - Air	1 - 6
50148804	Drain Fitting Adapter - Air	1 - 6

Standard Nozzle Selection

Model LCA6 Air Defrost

Model	No. of Fans	Distributor Tube (in.)		No. of Circuits	R-404A	R-22
		OD	Length			
LCA640	1	3/16	15	1	–	–
LCA651	1	3/16	15	1	–	–
LCA662	1	3/16	15	2	L-1/2	L-1/3
LCA672	2	3/16	15	2	L-1/2	L-1/3
LCA690	2	3/16	15	3	L-3/4	L-1/2
LCA6110	2	3/16	15	3	L-3/4	L-1/2
LCA6135	3	3/16	15	5	L-1	L-3/4
LCA6160	3	3/16	15	5	L-1-1/2	L-1
LCA6185	4	3/16	15	5	L-1-1/2	L-1
LCA6215	4	3/16	15	5	L-1-1/2	L-1
LCA6260	5	3/16	15	9	L-2	L-1-1/2
LCA6310	6	3/16	15	9	L-2-1/2	L-2
LCA6350	6	3/16	15	10	L-2-1/2	L-2

Model LCE6/LCE4 Electric Defrost

	Model	No. of Fans	Distributor Tube (in.)		No. of Circuits	Low Temp. -30°F to 0°F SST		Medium Temp. 10°F to 25°F SST	
			OD	Length		R-404A	R-22	R-404A	R-22
6 Fins Per Inch	LCE635	1	3/16	15	2	L-1/2	L-1/4	L-1/3	L-1/4
	LCE643	1	3/16	15	2	L-1/2	L-1/3	L-1/3	L-1/4
	LCE665	2	3/16	15	4	L-3/4	L-1/2	L-1/2	L-1/2
	LCE676	2	3/16	15	4	L-1	L-3/4	L-3/4	L-1/2
	LCE694	2	3/16	15	5	L-1	L-3/4	L-3/4	L-1/2
	LCE6120	3	3/16	15	5	L-1-1/2	L-1	L-1	L-3/4
	LCE6140	3	3/16	15	6	L-1-1/2	L-1	L-1-1/2	L-1
	LCE6160	4	3/16	15	8	L-2	L-1	L-1-1/2	L-1
	LCE6180	4	3/16	15	10	L-2	L-1-1/2	L-1-1/2	L-1
	LCE6200	5	3/16	15	9	L-2-1/2	L-1-1/2	L-2	L-1-1/2
	LCE6240	6	3/16	15	9	L-2-1/2	L-2	L-2	L-1-1/2
	LCE6270	6	3/16	15	10	L-3	L-2	L-2-1/2	L-2
4 Fins Per Inch	LCE441	1	3/16	15	2	L-1/2	L-1/3	L-1/3	L-1/4
	LCE457	2	3/16	15	3	L-3/4	L-1/2	L-1/2	L-1/3
	LCE467	2	3/16	15	4	L-3/4	L-1/2	L-1/2	L-1/3
	LCE482	2	3/16	15	4	L-1	L-3/4	L-3/4	L-1/2
	LCE4105	3	3/16	15	5	L-1-1/2	L-3/4	L-1	L-3/4
	LCE4139	4	3/16	15	8	L-1-1/2	L-1	L-1-1/2	L-3/4
	LCE4174	5	3/16	15	8	L-2	L-1-1/2	L-1-1/2	L-1
	LCE4208	6	3/16	15	8	L-2-1/2	L-1-1/2	L-2	L-1-1/2
	LCE4235	6	3/16	15	10	L-2-1/2	L-2	L-2	L-1-1/2

Model LCH6/LCH4 Hot Gas Defrost

	Model	No. of Fans	Distributor Tube (in.)		No. of Circuits	Low Temp. -30°F to 0°F SST		Medium Temp. 10°F to 25°F SST	
			OD	Length		R-404A	R-22	R-404A	R-22
6 Fins Per Inch	LCH635	1	1/4	15	2	J-1/2	J-1/4	J-1/3	J-1/4
	LCH643	1	1/4	15	2	J-1/2	J-1/3	J-1/3	J-1/4
	LCH665	2	1/4	15	4	J-1	J-1/2	J-3/4	J-1/3
	LCH676	2	1/4	15	4	J-1	J-3/4	J-3/4	J-1/2
	LCH694	2	1/4	15	5	G-1-1/2	G-3/4	G-3/4	G-1/2
	LCH6120	3	1/4	15	5	G-1-1/2	G-1	G-1	G-3/4
	LCH6140	3	1/4	15	6	G-2	G-1	G-1-1/2	G-1
	LCH6160	4	1/4	15	8	G-2	G-1-1/2	G-1-1/2	G-1
	LCH6180	4	1/4	15	10	E-2-1/2	E-1-1/2	E-1-1/2	E-1
	LCH6200	5	1/4	15	9	E-2-1/2	E-2	E-2	E-1-1/2
	LCH6240	6	1/4	15	9	E-3	E-2	E-2	E-1-1/2
	LCH6270	6	1/4	15	10	E-3	E-2	E-2-1/2	E-1-1/2
4 Fins Per Inch	LCH441	1	1/4	15	2	J-1/2	J-1/3	J-1/3	J-1/4
	LCH457	2	1/4	15	3	J-3/4	J-1/2	J-1/2	J-1/3
	LCH467	2	1/4	15	4	J-1	J-1/2	J-3/4	J-1/2
	LCH482	2	1/4	15	4	J-1	J-3/4	J-3/4	J-1/2
	LCH4105	3	1/4	15	5	G-1-1/2	G-3/4	G-1	G-3/4
	LCH4139	4	1/4	15	8	G-2	G-1	G-1-1/2	G-1
	LCH4174	5	1/4	15	8	G-2	G-1-1/2	G-1-1/2	G-1
	LCH4208	6	1/4	15	8	G-2-1/2	G-2	G-2	G-1-1/2
	LCH4235	6	1/4	15	10	E-3	E-2	E-2	E-1-1/2

Notes

Notes

For more information on Larkin refrigeration products, contact your Sales Representative or visit our web site at www.larkinproducts.com.

LARKIN

Mastering the Art of

A Brand of Heatcraft Refrigeration Products LLC
2175 West Park Place Blvd. • Stone Mountain, GA 30087
800.848.9889 • Fax: 770.465.5990
www.larkinproducts.com

Since product improvement is a continuing effort, we reserve the right to make changes in specifications without notice.

LK-LOPTB-0508 | Version 000