A	HA642-13
B	HA674-03A
C	34711
D	34649
E	34467

DWG NO. DCAW120

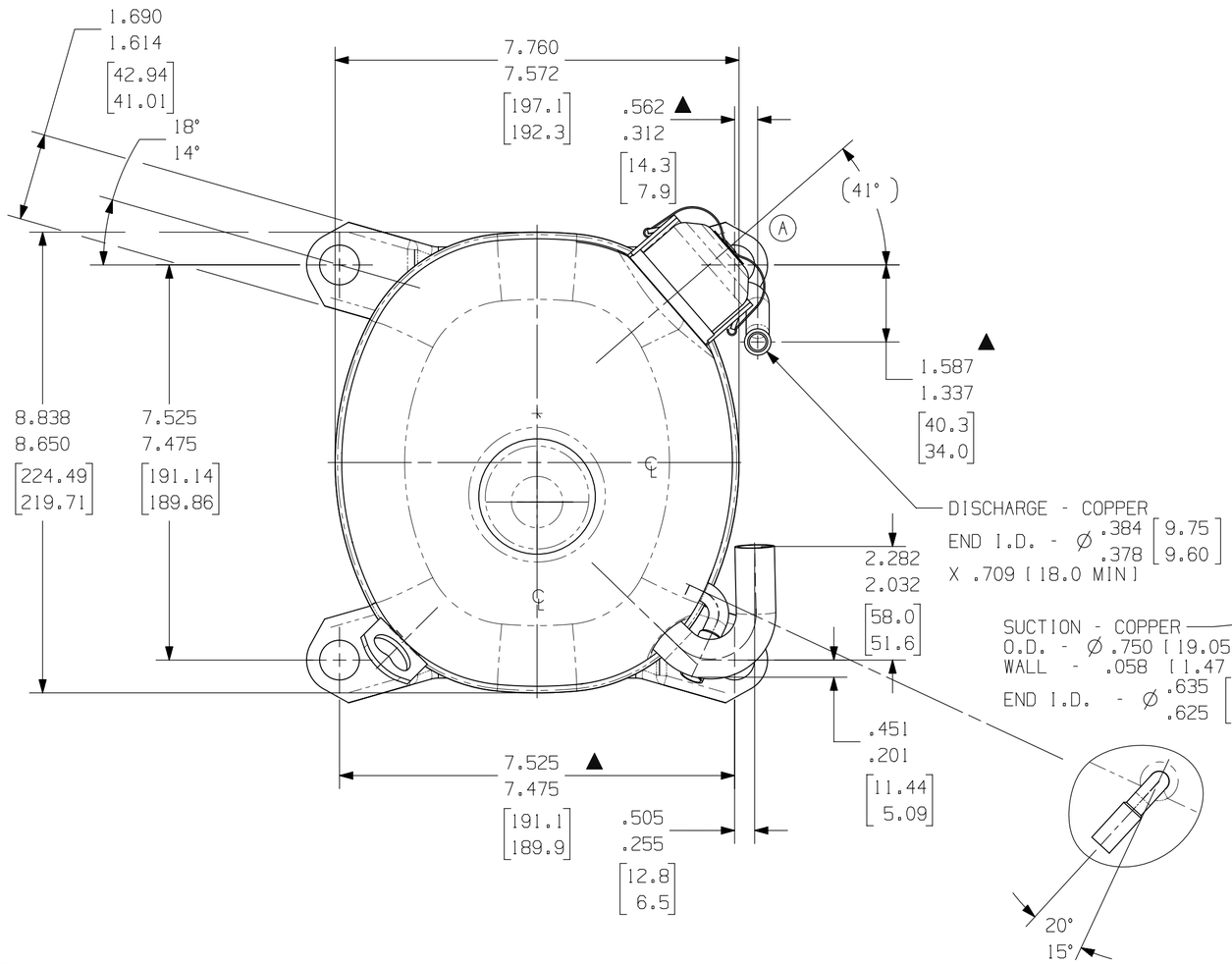

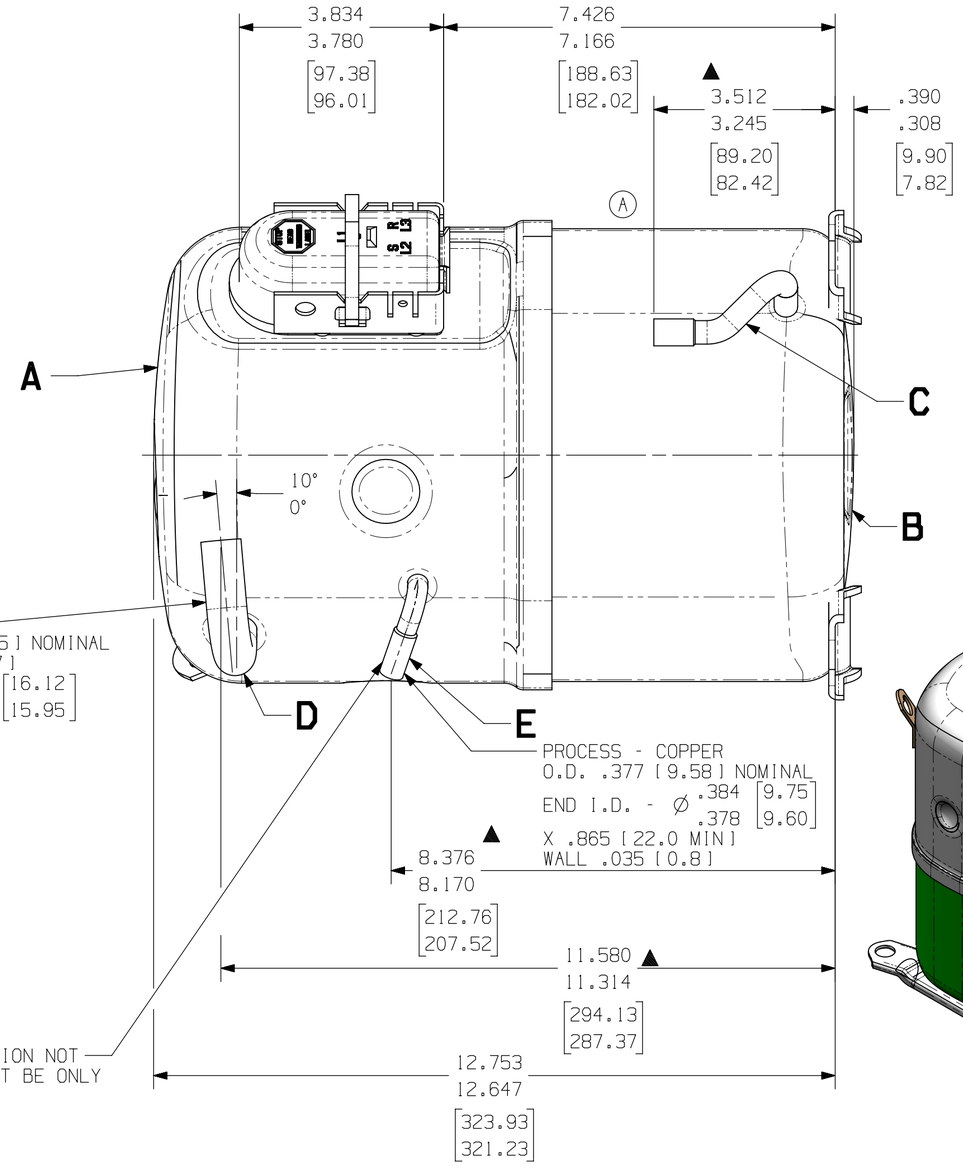

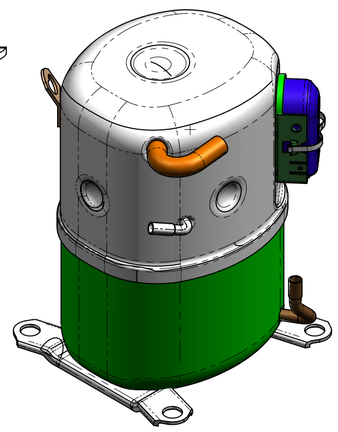

SCALE 1:4

NOTES:

1. IF SPECIFIED ON BILL OF MATERIAL, ASSEMBLE THESE PARTS AS SHOWN.
2. SEE SPEC. "A-B" AND "A-C" FOR PROCESSING.
3. ▲ MUST COMPLY WITH T.P.CO. GLOBAL SPEC. 08.

DIMENSIONING = INCHES (MILLIMETERS)

ENGLISH

Q.A. SYMBOLS
★ = CATEGORY I
▲ = CATEGORY II
■ = CATEGORY III
= CATEGORY IV

AW

LT	LC	CHANGE	DATE
C	--	EC89282 ATC REMODELED IN 3D TO MATCH DRAWING	BD 13MAR19
B	6C	#237791-000 WAS 3.826-4.076 54.8-61.1	T.M.G 13MAR99
A	5E	#236029-000 WAS 2.156-2.406 54.8-61.1	HINMAN 08/05/97
REL		#233955-151	----

THIS DRAWING OR PRINT (IT) IS THE PROPERTY OF TECUMSEH PRODUCTS COMPANY (TECUMSEH) AND CONTAINS INFORMATION BELONGING TO TECUMSEH. IT IS MADE AVAILABLE TO THE RECIPIENT ONLY FOR USE AS SPECIFIC CONDITION THAT NEITHER IT NOR THE INFORMATION CONTAINED THEREON OR DERIVED THEREFROM SHALL BE DISCLOSED OR MADE AVAILABLE TO OTHERS WITHOUT THE EXPRESS AND SPECIFIC WRITTEN CONSENT OF TECUMSEH. ANY REPRODUCTION OR ADAPTATION, IN WHOLE OR IN PART, WITHOUT APPROVED IN WRITING BY TECUMSEH IS AGAINST LAW. THIS DRAWING MAY NOT BE COPIED OR DUPLICATED IN ANY MANNER OR TO ANY EXTENT WITHOUT SPECIFIC WRITTEN CONSENT AND THIS DRAWING IS TO BE RETURNED TO TECUMSEH AT THE LATTER'S REQUEST WHEN THE SUPPLY HAS FULFILLED THEREOF TO TECUMSEH AT THE SUPPLY HAS FULFILLED THE PURPOSE FOR WHICH IT WAS SUPPLIED.

DO NOT SCALE THIS DRAWING. ALL FERROUS MATERIALS MUST NOT WHEN TREATED AS RECEIVED OR AT COMPRESSOR ASSEMBLY.

DIS.CODE

DESCRIPTION: SALES COMPRESSOR

DWN.	MODELED BY	CHK & APR	SCALE
SHERMAN 27MAR97	------ ------	ON FILE	1:2 & NOTED

THIS PRINT SUPERSEDES ALL PRINTS PRIOR TO

TECUMSEH PRODUCTS CO.
ANN ARBOR, MICHIGAN

MATERIAL: NOTED

DWG NO. DCAW120